Volume Two of Two

Job Number: 10-007

C□i□□e□a Count□
Cit□/Count□ Building Reno□ation

325 Court Street
Sault Ste. Marie□Mi□□igan 4□783

Bids and Permits

April 9, 2012

Project Team:

Architect:

Landmar□ Design Grou□□P.C.
3900 Linden Avenue, S.E. Suite C
Grand Rapids, Michigan 49548
P: (616) 956-0606

Design Builder:

Gundla□□ C□am□ion□In□.
180 Traders Mine Road
Iron Mountain, Michigan 49801
P: (906) 779-2303
F: (906) 779-8947

Structural Engineer:

□DH Engineering□In□.
3000 Ivanrest S.W., Suite B
Grandville, Michigan 49418
P: (616) 531-6020
F: (616) 531- 8637

Mechanical / Electrical Engineer:

Morgan M. Landon P.E. LLC
2054 Brandon Drive NW
Grand Rapids, Michigan 49504
P: (616) 608-3372
F: (616) 791-0968

PROJECT MANUAL CONTENTS

BIDDING REQUIREMENTS, CONTRACT FORMS, AND CONDITIONS OF THE CONTRACT

See Volume One

DIVISION 1 GENERAL REQUIREMENTS

See Volume One

DIVISION 2 SITE WORK

02070 Selective Demolition

DIVISION 3 CONCRETE

033000 Cast-in-Place Concrete

DIVISION 4 MASONRY

042200 Concrete Unit Masonry
04240 Veneer Masonry

DIVISION 5 METALS

051200 Structural Metal Framing
053100 Steel Decking
05500 Metal Fabrications
05800 Expansion Control

DIVISION 6 WOOD AND PLASTICS

06100 Rough Carpentry
06400 Architectural Woodwork

DIVISION 7 THERMAL AND MOISTURE PROTECTION

07200 Insulation
07240 Exterior Insulation and Finish System
07250 Spray Applied Insulation.
07500 Membrane Roofing
07900 Joint Sealers

DIVISION 8 DOORS AND WINDOWS

08100 Metal Doors and Metal Frames
08200 Wood Doors
08300 Special Doors
08500 Aluminum Frames and Doors
08700 Door Hardware
08800 Glass and Glazing

DIVISION 9 FINISHES

09250 Gypsum Board Systems
09300 Tile
09500 Acoustical Treatment
09650 Resilient Flooring and Accessories
09680 Carpet
09900 Painting
09955 Wallcoverings

DIVISION 10 SPECIALTIES

10115 Markerboards and Display Cabinets
10150 Toilet and Shower Partitions
10440 Signage
10500 Metal Lockers
10520 Fire Extinguishers and Cabinets
10800 Toilet and Shower Accessories
10914 Hat and Coat Racks

DIVISION 11 EQUIPMENT

11132 Projection Screen
11190 Detention Doors, Windows and Hardware
11195 Detention Equipment

DIVISION 12 FURNISHINGS

12567 Courtroom Bench Seating

DIVISION 13 SPECIAL CONSTRUCTION

13070 Bullet Resistant Protection

APPENDIX A - DOOR SCHEDULE

APPENDIX B - FINISH SCHEDULE

DIVISION 14 CONVEYING SYSTEMS

Not Used

DIVISION 21 FIRE PROTECTION SYSTEMS

Not Used

DIVISION 22 PLUMBING SYSTEMS

22 00 50 General Plumbing Systems Requirements
22 05 53 Identification for Plumbing Piping and Equipment
22 07 00 Plumbing Insulation
22 11 00 Facility Water Distribution
22 13 00 Facility Sanitary Waste and Vent Systems
22 40 00 Plumbing Fixtures

DIVISION 23 HVAC SYTEMS

23 00 50	General HVAC Systems Requirements
23 05 53	Identification for HVAC Piping and Equipment
23 05 93	Testing, Adjusting, and Balancing for HVAC
23 07 00	HVAC Insulation
23 09 00	Instrumentation and Control for HVAC
23 09 23	Direct-Digital Control System for HVAC
23 09 93	Sequence of Operations for HVAC Controls
23 21 13	Hydronic Piping
23 21 16	Hydronic Piping Specialties
23 21 23	Hydronic Pumps.
23 31 00	HVAC Ducts and Casings.
23 33 00	Air Duct Accessories
23 34 00	HVAC Fans
23 37 00	Air Outlets and Inlets
23 52 34	Finned Water-Tube Boilers.
23 81 03	Packaged Rooftop Air Conditioning Units
23 81 26	Split-System Air-Conditioners
23 82 00	Convection Heating and Cooling Units

DIVISION 26 ELECTRICAL

26 00 50	Basic Electrical Materials and Methods
26 05 19	Low-Voltage Electrical Power Conductors and Cables
26 05 26	Grounding and Bonding for Electrical Systems
26 05 29	Hangers and Supports for Electrical Systems
26 05 33	Raceway and Boxes for Electrical Systems
26 05 34	Floor Boxes for Electrical Systems
26 05 53	Identification for Electrical Systems
26 09 23	Lighting Control Devices
26 24 16	Panelboards
26 27 26	Wiring Devices
26 41 00	Facility Lightning Protection
26 51 00	Interior Lighting
26 70 00	Fire Detection and Alarm

DIVISION 27 SECURITY SYSTEMS

Not Used

DIVISION 28 ELECTRONIC SECURITY AND CONTROL SYSTEM (ESCS)

28 00 50	Electronic Security and Control System General Requirements
28 05 33	Back-boxes for ESCS
28 05 53	Identification for ESCS
28 13 00	Access Control Sub-System
28 23 00	Video Surveillance Sub-System
28 33 00	Intercom Sub-System

SECTION 02070
SELECTIVE DEMOLITION

PART 1 GENERAL

1.01 WORK INCLUDED

A. Remove the entire existing former sheriff office building, foundations, sidewalks, below grade footings, etc.

B. Remove designated building equipment and fixtures. Cap and identify utilities.

C. Remove designated building elements and building elements not designated as required for new work.

D. Removal of all existing finishes including floor, wall, ceiling, etc, as required for proper installation of new materials.

1.02 RELATED WORK

A. All parts of the Contract Documents relate to the Work specified in this section.

1.03 COORDINATION

A. Conduct demolition to minimize interference with adjacent building areas. Maintain protected egress and access at all times.

B. Provide, erect, and maintain temporary barriers and security devices.

C. Coordinate extent of demolition with requirements of new construction.

D. The demolition drawings are intended to indicate the bounds of work required. It is not expected that every item will be specifically called out in the documents. Contractor shall provide all demolition required for new construction regardless if shown on drawings or not.

PART 2 PRODUCTS

Not Used

PART 3 EXECUTION

3.01 EXAMINATION

A. Examine area of work and drawings to gain a full understanding for the extent of work.

B. Determine the extent and limits of items to be removed including but not limited to wall, ceiling, and floor materials and finishes; doors, windows, hardware and frames; plumbing, electrical, and mechanical items and accessories; furnishings and equipment.

C. Coordinate all removal required to facilitate new construction.

3.02 PREPARATION

A. Erect and maintain weatherproof closures for exterior openings.

B. Protect existing items that are not scheduled for removal.

C. Disconnect, remove, and cap affected utility services within demolition areas as required for work and in accordance with applicable codes.

D. Mark location of disconnected utilities. Identify and indicate capping locations on Project Record Documents.

3.03 BUILDING DEMOLITION

A. Maintain barriers necessary to protect public.

B. Control dust from spreading to adjacent buildings and property.

C. Cut and cap all utilities prior to demolition.

D. Investigate the structure prior to demolition to fully understand the effort required to demolish the building.

E. Use of explosives is forbidden.

F. Building removal shall include but not limited to roof, walls, finishes, slabs, entire foundation / footings and connected utilities.

G. Legally dispose of all debris.

3.04 GENERAL DEMOLITION

A. Demolish in an orderly and careful manner. Protect existing structural members, interior partitions and exterior architectural elements. Utilize saw-cutting, torch-cutting, dismantle, and similar techniques as appropriate for new construction.

B. Except for items indicated for reuse, remove demolished materials from site as work progresses. Do not burn or bury materials on site.

C. Remove materials to be re-installed or retained in manner to prevent damage. Store materials and protect materials against damage from construction activities or exposure to weather.

D. Remove and promptly dispose of contaminated, vermin infested, or dangerous materials encountered. Remove and dispose of materials in accordance with applicable environmental codes and requirements.

E. Upon completion of demolition work, leave areas of work in clean condition, ready for new construction.

3.05 WALL, FLOOR, AND FRAME REMOVAL

A. Remove masonry walls and frames where indicated in a manner to allow new jambs, and partitions to be toothed into existing wall.

B. Remove masonry above new wall openings as required to provide new lintels.

C. Remove masonry for new openings in a manner to allow installation of new bullnose masonry to be toothed into existing wall at jambs.

D. Full height wall demolition and wall demolition indicated for new door openings shall be removed to or below floor line as required for new floor finish. Floor shall be level to within 1/8 inch in ten feet.

E. Refer to structural drawing requirements when removing bearing walls.

F. Saw-cut floor slabs as required for installation of new footings and utilities.

3.06 CEILING REMOVAL

A. Remove ceilings as required for new construction and in areas indicated on demolition plan.

B. Remove panels, suspended grid, trim, and hangers. Clean adjoining wall surfaces of fasteners that will affect final finish appearance.

C. Remove plaster, lath, suspension, and trim materials.

D. Remove suspended panel ceilings for re-installation after above ceiling work is complete in locations shown or where otherwise required.

3.07 FINISH REMOVAL

A. Remove existing finishes where indicated on drawings and where existing finish material will be detrimental to application of new finish materials.

END OF SECTION

SECTION 033000 - CAST-IN-PLACE CONCRETE

PART 1 - GENERAL

1.1 RELATED DOCUMENTS

A. Drawings and general provisions of the Contract, including General and Supplementary Conditions and Division 01 Specification Sections, apply to this Section. If differing requirements are identified elsewhere (in these specifications or on drawings or separate instructions), the more stringent requirement shall be met.

1.2 SUMMARY

A. This Section specifies cast-in place concrete, including formwork, reinforcement, concrete materials, mixture design, placement procedures, and finishes.

B. Division 31 Section "Earthwork" for all site preparation..

C. Refer to drawings for additional information.

1.3 SUBMITTALS

A. Product Data: For each type of product indicated.

B. Design Mixtures: For each concrete mixture.

C. Shop Drawings: For steel reinforcement.

D. Material certificates: Contractor to provide a certified letter stating that materials/products used on this project meet or exceed material/products specified within the contract documents.

1.4 QUALITY ASSURANCE

A. Manufacturer Qualifications: A firm experienced in manufacturing ready-mixed concrete products and that complies with ASTM C 94/C 94M requirements for production facilities and equipment.

1. Manufacturer certified according to NRMCA's "Certification of Ready Mixed Concrete Production Facilities."

B. ACI Publications: Comply with the following unless modified by requirements in the Contract Documents:

1. ACI 301, "Specification for Structural Concrete,"
2. ACI 117, "Specifications for Tolerances for Concrete Construction and Materials."
3. ACI 302, “Guide For Concrete Floor and Slab Construction.”

C. Concrete Testing Service: Engage a qualified independent testing agency to perform material evaluation tests, installation, and to design concrete mixtures.

D. Preinstallation Conference: Conduct conference at Project site.

PART 2 - PRODUCTS

2.1 FORM-FACING MATERIALS

A. Smooth-Formed Finished Concrete: Form-facing panels that will provide continuous, true, and smooth concrete surfaces. Furnish in largest practicable sizes to minimize number of joints.

1. Plywood, metal, or other approved panel materials.
2. Exterior-grade plywood panels, suitable for concrete forms, complying with DOC PS 1, and as follows:

   a. High-density overlay, Class 1 or better.
   b. Medium-density overlay, Class 1 or better; mill-release agent treated and edge sealed.
   c. Structural 1, B-B or better; mill oiled and edge sealed.
   d. B-B (Concrete Form), Class 1 or better; mill oiled and edge sealed.

B. Rough-Formed Finished Concrete: Plywood, lumber, metal, or another approved material. Provide lumber dressed on at least two edges and one side for tight fit.

C. Forms for Cylindrical Columns, Pedestals, and Supports: Metal, glass-fiber-reinforced plastic, paper, or fiber tubes that will produce surfaces with gradual or abrupt irregularities not exceeding specified formwork surface class. Provide units with sufficient wall thickness to resist plastic concrete loads without detrimental deformation.

D. Chamfer Strips: Wood, metal, PVC, or rubber strips, 3/4 by 3/4 inch , minimum.

E. Form-Release Agent: Commercially formulated form-release agent that will not bond with, stain, or adversely affect concrete surfaces and will not impair subsequent treatments of concrete surfaces.

1. Formulate form-release agent with rust inhibitor for steel form-facing materials.

F. Form Ties: Factory-fabricated, removable or snap-off metal or glass-fiber-reinforced plastic form ties designed to resist lateral pressure of fresh concrete on forms and to prevent spalling of concrete on removal.

1. Furnish stainless steel units that will leave no corrodible metal closer than 1.5 inches to the plane of concrete surface exposed to view.
2. Furnish ties that, when removed, will leave holes no larger than 1 inch in diameter in concrete surface not exposed to view.

2.2 STEEL REINFORCEMENT

A. Reinforcing Bars: ASTM A 615/A 615M, Grade 60, deformed.

B. Plain-Steel Welded Wire Reinforcement: ASTM A 185, plain, fabricated from as-drawn steel wire into flat sheets.

C. Deformed-Steel Welded Wire Reinforcement: ASTM A 497, flat sheet.

D. Bar Supports: Bolsters, chairs, spacers, and other devices for spacing, supporting, and fastening reinforcing bars and welded wire reinforcement in place. Manufacture bar supports from steel wire, plastic, or precast concrete according to CRSI's "Manual of Standard Practice."

2.3 CONCRETE MATERIALS

A. Cementitious Material: Use the following cementitious materials, of the same type, brand, and source, throughout Project:

1. Portland Cement: ASTM C 150, Type I

   a. Fly Ash: ASTM C 618, Class C or F.
   b. Ground Granulated Blast-Furnace Slag: ASTM C 989, Grade 100 or 120.

B. Normal-Weight Aggregates: ASTM C 33, graded, as indicated/ required.

1. Fine Aggregate: Free of materials with deleterious reactivity to alkali in cement.

C. Water: ASTM C 94/C 94M and potable.

D. Air-Entraining Admixture: ASTM C 260.

E. Chemical Admixtures: Provide admixtures certified by manufacturer to be compatible with other admixtures and that will not contribute water-soluble chloride ions exceeding those permitted in hardened concrete. Do not use calcium chloride or admixtures containing calcium chloride.

1. Water-Reducing Admixture: ASTM C 494/C 494M, Type A.
2. Retarding Admixture: ASTM C 494/C 494M, Type B.
3. Water-Reducing and Retarding Admixture: ASTM C 494/C 494M, Type D.
4. High-Range, Water-Reducing Admixture: ASTM C 494/C 494M, Type F.
5. High-Range, Water-Reducing and Retarding Admixture: ASTM C 494/C 494M, Type G.
6. Plasticizing and Retarding Admixture: ASTM C 1017/C 1017M, Type II.

F. Synthetic Fiber: Monofilament or fibrillated polypropylene fibers engineered and designed for use in concrete pavement, complying with ASTM C 1116, Type III, 1/2 to 1-1/2 inches long.

2.4 VAPOR BARRIER

A. Plastic Vapor Barrier: ASTM E 1745, Class A, minimum 15 mils, and with a permeability rate of 0.01 perms or lower. Include manufacturer's recommended adhesive or pressure-sensitive tape.

2.5 CURING MATERIALS

A. Evaporation Retarder: Waterborne, monomolecular film forming, manufactured for application to fresh concrete.

B. Absorptive Cover: AASHTO M 182, Class 2, burlap cloth made from jute or kenaf, weighing approximately 9 oz./sq. yd. when dry.

C. Moisture-Retaining Cover: ASTM C 171, polyethylene film or white burlap-polyethylene sheet.

D. Water: Potable.

E. Clear, Waterborne, Membrane-Forming Curing Compound: ASTM C 309, Type 1, Class B, dissipating.

F. Clear, Waterborne, Membrane-Forming Curing Compound: ASTM C 309, Type 1, Class B, nondissipating, certified by curing compound manufacturer to not interfere with bonding of floor covering.

G. Clear, Solvent-Borne, Membrane-Forming Curing and Sealing Compound: ASTM C 1315, Type 1, Class A.

H. Clear, Waterborne, Membrane-Forming Curing and Sealing Compound: ASTM C 1315, Type 1, Class A.

2.6 RELATED MATERIALS

A. Expansion- and Isolation-Joint-Filler Strips: ASTM D 1751, asphalt-saturated cellulosic fiber or ASTM D 1752, cork or self-expanding cork.

2.7 WATERSTOPS

A. Flexible Rubber Waterstops: CE CRD-C 513; for embedding in concrete to prevent passage of fluids through joints. Factory fabricate corners, intersections, and directional changes.

1. Profile: Contractor’s standard
2. Dimensions: 4 inches by 3/16 inch thick nontapered.

B. Flexible PVC Waterstops: CE CRD-C 572; for embedding in concrete to prevent passage of fluids through joints. Factory fabricate corners, intersections, and directional changes.

1. Profile: Contractor’s standard
2. Dimensions: 4 inches by 3/16 inch thick nontapered.

C. Self-Expanding Butyl Strip Waterstops: Manufactured rectangular or trapezoidal strip, butyl rubber with sodium bentonite or other hydrophilic polymers, for adhesive bonding to concrete, 3/4 by 1 inch.

2.8 CONCRETE MIXTURES

A. Prepare design mixtures for each type and strength of concrete, proportioned on the basis of laboratory trial mixture or field test data, or both, according to ACI 301.

B. Proportion normal-weight concrete mixture as indicated on drawings.

2.9 FABRICATING REINFORCEMENT

A. Fabricate steel reinforcement according to CRSI's "Manual of Standard Practice."

2.10 CONCRETE MIXING

A. Ready-Mixed Concrete: Measure, batch, mix, and deliver concrete according to ASTM C 94/C 94M and ASTM C 1116, and furnish batch ticket information.

1. When air temperature is between 85 and 90 deg F, reduce mixing and delivery time from 1-1/2 hours to 75 minutes; when air temperature is above 90 deg F, reduce mixing and delivery time to 60 minutes.

PART 3 - EXECUTION

3.1 FORMWORK

A. Design, erect, shore, brace, and maintain formwork, according to ACI 301, to support vertical, lateral, static, and dynamic loads, and construction loads that might be applied, until structure can support such loads.

B. Construct formwork so concrete members and structures are of size, shape, alignment, elevation, and position indicated, within tolerance limits of ACI 117.

C. Limit concrete surface irregularities, designated by ACI 347R as abrupt or gradual, as follows:

1. Class A, 1/8 inch for smooth-formed finished surfaces.
2. Class B, 1/4 inch for rough-formed finished surfaces.

D. Construct forms tight enough to prevent loss of concrete mortar.

E. Fabricate forms for easy removal without hammering or prying against concrete surfaces. Provide crush or wrecking plates where stripping may damage cast concrete surfaces. Provide top forms for inclined surfaces steeper than 1.5 horizontal to 1 vertical.

1. Install keyways, reglets, recesses, and the like, for easy removal.
2. Do not use rust-stained steel form-facing material.

F. Set edge forms, bulkheads, and intermediate screed strips for slabs to achieve required elevations and slopes in finished concrete surfaces. Provide and secure units to support screed strips; use strike-off templates or compacting-type screeds.

G. Provide temporary openings for cleanouts and inspection ports where interior area of formwork is inaccessible. Close openings with panels tightly fitted to forms and securely braced to prevent loss of concrete mortar. Locate temporary openings in forms at inconspicuous locations.

H. Chamfer exterior corners and edges of permanently exposed concrete.

I. Form openings, chases, offsets, sinkages, keyways, reglets, blocking, screeds, and bulkheads required in the Work. Determine sizes and locations from trades providing such items.

J. Clean forms and adjacent surfaces to receive concrete. Remove chips, wood, sawdust, dirt, and other debris just before placing concrete.

K. Retighten forms and bracing before placing concrete, as required, to prevent mortar leaks and maintain proper alignment.

L. Coat contact surfaces of forms with form-release agent, according to manufacturer's written instructions, before placing reinforcement.

3.2 EMBEDDED ITEMS

A. Place and secure anchorage devices and other embedded items required for adjoining work that is attached to or supported by cast-in-place concrete. Use setting drawings, templates, diagrams, instructions, and directions furnished with items to be embedded.

3.3 REMOVING AND REUSING FORMS

A. General: Formwork for sides of, walls, columns, and similar parts of the Work that does not support weight of concrete may be removed after cumulatively curing at not less than 50 deg F for 24 hours after placing concrete, if concrete is hard enough to not be damaged by form-removal operations and curing and protection operations are maintained.

B. Clean and repair surfaces of forms to be reused in the Work. Split, frayed, delaminated, or otherwise damaged form-facing material will not be acceptable for exposed surfaces. Apply new form-release agent.

C. When forms are reused, clean surfaces, remove fins and laitance, and tighten to close joints. Align and secure joints to avoid offsets. Do not use patched forms for exposed concrete surfaces unless approved by Architect.

3.4 VAPOR BARRIERS

A. Plastic Vapor Barriers: Place, protect, and repair vapor barriers according to ASTM E 1643 and manufacturer's written instructions.

1. Lap joints 6 inches and seal with manufacturer's recommended tape.
2. Seal all penetrations (including pipes) per manufacturer’s instructions
3. Lap Vapor Barrier over footings and turn-up along foundation walls.

3.5 STEEL REINFORCEMENT

A. General: Comply with CRSI's "Manual of Standard Practice" for placing reinforcement.

1. Do not cut or puncture vapor retarder. Repair damage and reseal vapor retarder before placing concrete.

3.6 JOINTS

A. General: Construct joints true to line with faces perpendicular to surface plane of concrete.

B. Construction Joints: Install so strength and appearance of concrete are not impaired, at locations indicated or as approved by Architect.

1. Place joints perpendicular to main reinforcement. Continue reinforcement across construction joints, unless otherwise indicated. Do not continue reinforcement through sides of strip placements of floors and slabs.
2. Form keyed joints as indicated. Embed keys at least 1-1/2 inches into concrete.
3. Locate joints for beams, slabs, joists, and girders in the middle third of spans. Offset joints in girders a minimum distance of twice the beam width from a beam-girder intersection.
4. Locate horizontal joints in walls and columns at underside of floors, slabs, beams, and girders and at the top of footings or floor slabs.
5. Space vertical joints in walls 16’-0”. Locate joints beside piers integral with walls, near corners, and in concealed locations where possible.
6. Use a bonding agent at locations where fresh concrete is placed against hardened or partially hardened concrete surfaces.
7. Use epoxy-bonding adhesive at locations where fresh concrete is placed against hardened or partially hardened concrete surfaces.

C. Contraction Joints in Slabs-on-Grade: Form weakened-plane contraction joints, sectioning concrete into areas as indicated. Construct contraction joints for a depth as indicated on drawings and as follows:

1. Grooved Joints: Form contraction joints after initial floating by grooving and finishing each edge of joint to a radius of 1/8 inch. Repeat grooving of contraction joints after applying surface finishes. Eliminate groover tool marks on concrete surfaces.
2. Sawed Joints: Form contraction joints with power saws equipped with shatterproof abrasive or diamond-rimmed blades. Cut 1/8-inch- wide joints into concrete when cutting action will not tear, abrade, or otherwise damage surface and before concrete develops random contraction cracks.

D. Isolation Joints in Slabs-on-Grade: After removing formwork, install joint-filler strips at slab junctions with vertical surfaces, such as column pedestals, foundation walls, grade beams, and other locations, as indicated.

1. Extend joint-filler strips full width and depth of joint, terminating flush with finished concrete surface, unless otherwise indicated.
2. Terminate full-width joint-filler strips not less than 1/2 inch or more than 1 inch below finished concrete surface where joint sealants, specified in Division 07 Section "Joint Sealants," are indicated.
3. Install joint-filler strips in lengths as long as practicable. Where more than one length is required, lace or clip sections together.

E. Doweled Joints: Install dowel bars and support assemblies at joints where indicated. Lubricate or asphalt coat one-half of dowel length to prevent concrete bonding to one side of joint.

3.7 CONCRETE PLACEMENT

A. Before placing concrete, verify that installation of formwork, reinforcement, and embedded items is complete and that required inspections have been performed.

B. Deposit concrete continuously in one layer or in horizontal layers of such thickness that no new concrete will be placed on concrete that has hardened enough to cause seams or planes of weakness. If a section cannot be placed continuously, provide construction joints as indicated. Deposit concrete to avoid segregation.

1. Consolidate placed concrete with mechanical vibrating equipment according to ACI 301.

C. Cold-Weather Placement: Comply with ACI 306R.

D. Hot-Weather Placement: Comply with ACI 305R.

3.8 FINISHING FORMED SURFACES

A. Rough-Formed Finish: As-cast concrete texture imparted by form-facing material with tie holes and defects repaired and patched. Remove fins and other projections that exceed specified limits on formed-surface irregularities.

1. Apply to concrete surfaces not exposed to public view.

B. Smooth-Formed Finish: As-cast concrete texture imparted by form-facing material, arranged in an orderly and symmetrical manner with a minimum of seams. Repair and patch tie holes and defects. Remove fins and other projections that exceed specified limits on formed-surface irregularities.

1. Apply to concrete surfaces exposed to public view, to receive a rubbed finish, or to be covered with a coating or covering material applied directly to concrete.

C. Rubbed Finish: Apply the following to smooth-formed finished as-cast concrete where indicated:

1. Smooth-Rubbed Finish: Not later than one day after form removal, moisten concrete surfaces and rub with carborundum brick or another abrasive until producing a uniform color and texture. Do not apply cement grout other than that created by the rubbing process.
2. Grout-Cleaned Finish: Wet concrete surfaces and apply grout of a consistency of thick paint to coat surfaces and fill small holes. Mix one part portland cement to one and one-half parts fine sand with a 1:1 mixture of bonding admixture and water. Add white portland cement in amounts determined by trial patches so color of dry grout will match adjacent surfaces. Scrub grout into voids and remove excess grout. When grout whitens, rub surface with clean burlap and keep surface damp by fog spray for at least 36 hours.
3. Cork-Floated Finish: Wet concrete surfaces and apply a stiff grout. Mix one part portland cement and one part fine sand with a 1:1 mixture of bonding agent and water. Add white portland cement in amounts determined by trial patches so color of dry grout will match adjacent surfaces. Compress grout into voids by grinding surface. In a swirling motion, finish surface with a cork float.

D. Related Unformed Surfaces: At tops of walls, horizontal offsets, and similar unformed surfaces adjacent to formed surfaces, strike off smooth and finish with a texture matching adjacent formed surfaces. Continue final surface treatment of formed surfaces uniformly across adjacent unformed surfaces, unless otherwise indicated.

3.9 FINISHING FLOORS AND SLABS

A. General: Comply with ACI 302.1R recommendations for screeding, restraightening, and finishing operations for concrete surfaces. Do not wet concrete surfaces.

B. Scratch Finish: While still plastic, texture concrete surface that has been screeded and bull-floated or darbied. Use stiff brushes, brooms, or rakes to produce a profile amplitude of 1/4 inch in 1 direction.

1. Apply scratch finish to surfaces indicated and to receive concrete floor toppings to receive mortar setting beds for bonded cementitious floor finishes.

C. Float Finish: Consolidate surface with power-driven floats or by hand floating if area is small or inaccessible to power driven floats. Restraighten, cut down high spots, and fill low spots. Repeat float passes and restraightening until surface is left with a uniform, smooth, granular texture.

1. Apply float finish to surfaces indicated, to receive trowel finish, and to be covered with fluid-applied or sheet waterproofing, built-up or membrane roofing, or sand-bed terrazzo.

D. Trowel Finish: After applying float finish, apply first troweling and consolidate concrete by hand or power-driven trowel. Continue troweling passes and restraighten until surface is free of trowel marks and uniform in texture and appearance. Grind smooth any surface defects that would telegraph through applied coatings or floor coverings.

1. Apply a trowel finish to surfaces indicated, exposed to view, or to be covered with resilient flooring, carpet, ceramic or quarry tile set over a cleavage membrane, paint, or another thin-film-finish coating system.

2. Finish and measure surface so gap at any point between concrete surface and an unleveled, freestanding, 10-foot- long straightedge resting on 2 high spots and placed anywhere on the surface does not exceed 1/8 inch.

E. Trowel and Fine-Broom Finish: Apply a first trowel finish to surfaces indicated, where ceramic or quarry tile is to be installed by either thickset or thin-set method. While concrete is still plastic, slightly scarify surface with a fine broom.

1. Comply with flatness and levelness tolerances for trowel finished floor surfaces.

F. Broom Finish: Apply a broom finish to exterior concrete platforms, steps, and ramps, and elsewhere as indicated.

1. Immediately after float finishing, slightly roughen trafficked surface by brooming with fiber-bristle broom perpendicular to main traffic route. Coordinate required final finish with Architect before application.

3.10 CONCRETE PROTECTING AND CURING

A. General: Protect freshly placed concrete from premature drying and excessive cold or hot temperatures. Comply with ACI 306R for cold-weather protection and ACI 305R for hot-weather protection during curing.

B. Evaporation Retarder: Apply evaporation retarder to unformed concrete surfaces if hot, dry, or windy conditions cause moisture loss approaching 0.2 lb/sq. ft. x h before and during finishing operations. Apply according to manufacturer's written instructions after placing, screeding, and bull floating or darbying concrete, but before float finishing.

C. Formed Surfaces: Cure formed concrete surfaces, including underside of beams, supported slabs, and other similar surfaces. If forms remain during curing period, moist cure after loosening forms. If removing forms before end of curing period, continue curing for the remainder of the curing period.

D. Unformed Surfaces: Begin curing immediately after finishing concrete. Cure unformed surfaces, including floors and slabs, concrete floor toppings, and other surfaces.

E. Cure concrete according to ACI 308R, by one or a combination of the following methods:

1. Moisture Curing: Keep surfaces continuously moist for not less than seven days with the following materials:

   a. Water.
   b. Continuous water-fog spray.
   c. Absorptive cover, water saturated, and kept continuously wet. Cover concrete surfaces and edges with 12-inch lap over adjacent absorptive covers.

2. Moisture-Retaining-Cover Curing: Cover concrete surfaces with moisture-retaining cover for curing concrete, placed in widest practicable width, with sides and ends lapped at least 12 inches, and sealed by waterproof tape or adhesive. Cure for not less than seven days. Immediately repair any holes or tears during curing period using cover material and waterproof tape.

   a. Moisture cure or use moisture-retaining covers to cure concrete surfaces to receive floor coverings.
   b. Moisture cure or use moisture-retaining covers to cure concrete surfaces to receive penetrating liquid floor treatments.
   c. Cure concrete surfaces to receive floor coverings with either a moisture-retaining cover or a curing compound that the manufacturer certifies will not interfere with bonding of floor covering used on Project..

3. Curing Compound: Apply uniformly in continuous operation by power spray or roller according to manufacturer's written instructions. Recoat areas subjected to heavy rainfall within three hours after initial application. Maintain continuity of coating and repair damage during curing period.

   a. After curing period has elapsed, remove curing compound without damaging concrete surfaces by method recommended by curing compound manufacturer, unless manufacturer certifies curing compound will not interfere with bonding of floor covering used on Project.

4. Curing and Sealing Compound: Apply uniformly to floors and slabs indicated in a continuous operation by power spray or roller according to manufacturer's written instructions. Recoat areas subjected to heavy rainfall within three hours after initial application. Repeat process 24 hours later and apply a second coat. Maintain continuity of coating and repair damage during curing period.

3.11 CONCRETE SURFACE REPAIRS

A. Defective Concrete: Repair and patch defective areas when approved by Architect. Remove and replace concrete that cannot be repaired and patched to Architect's approval.

B. Patching Mortar: Mix dry-pack patching mortar, consisting of one part portland cement to two and one-half parts fine aggregate passing a No. 16 sieve, using only enough water for handling and placing.

C. Repairing Formed Surfaces: Surface defects include color and texture irregularities, cracks, spalls, air bubbles, honeycombs, rock pockets, fins and other projections on the surface, and stains and other discolorations that cannot be removed by cleaning.

1. Immediately after form removal, cut out honeycombs, rock pockets, and voids more than 1/2 inch in any dimension in solid concrete, but not less than 1 inch in depth. Make edges of cuts perpendicular to concrete surface. Clean, dampen with water, and brush-coat holes and voids with bonding agent. Fill and compact with patching mortar before bonding agent has dried. Fill form-tie voids with patching mortar or cone plugs secured in place with bonding agent.
2. Repair defects on surfaces exposed to view by blending white portland cement and standard portland cement so that, when dry, patching mortar will match surrounding color. Patch a test area at inconspicuous locations to verify mixture and color match before proceeding with patching. Compact mortar in place and strike off slightly higher than surrounding surface.
3. Repair defects on concealed formed surfaces that affect concrete's durability and structural performance as determined by Architect.

D. Repairing Unformed Surfaces: Test unformed surfaces, such as floors and slabs, for finish and verify surface tolerances specified for each surface. Correct low and high areas. Test surfaces sloped to drain for trueness of slope and smoothness; use a sloped template.

1. Repair finished surfaces containing defects. Surface defects include spalls, popouts, honeycombs, rock pockets, crazing and cracks in excess of 0.01 inch wide or that penetrate to reinforcement or completely through unreinforced sections regardless of width, and other objectionable conditions.
2. After concrete has cured at least 14 days, correct high areas by grinding.
3. Correct localized low areas during or immediately after completing surface finishing operations by cutting out low areas and replacing with patching mortar. Finish repaired areas to blend into adjacent concrete.
4. Correct other low areas scheduled to receive floor coverings with a repair underlayment. Prepare, mix, and apply repair underlayment and primer according to manufacturer's written instructions to produce a smooth, uniform, plane, and level surface. Feather edges to match adjacent floor elevations.
5. Correct other low areas scheduled to remain exposed with a repair topping. Cut out low areas to ensure a minimum repair topping depth of 1/4 inch to match adjacent floor elevations. Prepare, mix, and apply repair topping and primer according to manufacturer's written instructions to produce a smooth, uniform, plane, and level surface.
6. Repair defective areas, except random cracks and single holes 1 inch or less in diameter, by cutting out and replacing with fresh concrete. Remove defective areas with clean, square cuts and expose steel reinforcement with at least a 3/4-inch clearance all around. Dampen concrete surfaces in contact with patching concrete and apply bonding agent. Mix patching concrete of same materials and mixture as original concrete except without coarse aggregate. Place, compact,

and finish to blend with adjacent finished concrete. Cure in same manner as adjacent concrete.

7. Repair random cracks and single holes 1 inch or less in diameter with patching mortar. Groove top of cracks and cut out holes to sound concrete and clean off dust, dirt, and loose particles. Dampen cleaned concrete surfaces and apply bonding agent. Place patching mortar before bonding agent has dried. Compact patching mortar and finish to match adjacent concrete. Keep patched area continuously moist for at least 72 hours.

E. Perform structural repairs of concrete, subject to Architect's approval, using epoxy adhesive and patching mortar.

F. Repair materials and installation not specified above may be used, subject to Architect's approval.

3.12 FIELD QUALITY CONTROL

A. Testing and Inspecting: Owner will engage a qualified testing and inspecting agency to perform field tests and inspections and prepare test reports.

B. Inspections:

1. Steel reinforcement placement.
2. Steel reinforcement welding.
3. Headed bolts and studs.
4. Verification of use of required design mixture.
5. Concrete placement, including conveying and depositing.
6. Curing procedures and maintenance of curing temperature.
7. Verification of concrete strength before removal of shores and forms from beams and slabs.

C. Concrete Tests: Testing of composite samples of fresh concrete obtained according to ASTM C 172 shall be performed according to the following requirements:

1. Testing Frequency: Obtain one composite sample for each day's pour of each concrete mixture exceeding 5 cu. yd., but less than 25 cu. yd., plus one set for each additional 50 cu. yd. or fraction thereof.

2. Slump: ASTM C 143/C 143M; one test at point of placement for each composite sample, but not less than one test for each day's pour of each concrete mixture. Perform additional tests when concrete consistency appears to change.
3. Air Content: ASTM C 231, pressure method, for normal-weight concrete; one test for each composite sample, but not less than one test for each day's pour of each concrete mixture.
4. Concrete Temperature: ASTM C 1064/C 1064M; one test hourly when air temperature is 40 deg F and below and when 80 deg F and above, and one test for each composite sample.
5. Unit Weight: ASTM C 567, fresh unit weight of structural lightweight concrete; one test for each composite sample, but not less than one test for each day's pour of each concrete mixture.

6. Compressive-Strength Tests: ASTM C 39/C 39M.

   a. Test one cylinder at 7 days and two cylinders at 28 days, the fourth cylinder is to be held in reserve for a 56 day break if needed.
   b. A compressive-strength test shall be the average compressive strength from a set of two specimens obtained from same composite sample and tested at age indicated.

7. When strength of field-cured cylinders is less than 85 percent of companion laboratory-cured cylinders, Contractor shall evaluate operations and provide corrective procedures for protecting and curing in-place concrete.
8. Strength of each concrete mixture will be satisfactory if every average of any three consecutive compressive-strength tests equals or exceeds specified compressive strength and no compressive-strength test value falls below specified compressive strength by more than 500 psi.
9. Test results shall be reported in writing to Architect, concrete manufacturer, and Contractor within 48 hours of testing. Reports of compressive-strength tests shall contain Project identification name and number, date of concrete placement, name of concrete testing and inspecting agency, location of concrete batch in Work, design compressive strength at 28 days, concrete mixture proportions and materials, compressive breaking strength, and type of break for both 7- and 28-day tests.
10. Nondestructive Testing: Impact hammer, sonoscope, or other nondestructive device may be permitted by Architect but will not be used as sole basis for approval or rejection of concrete.
11. Additional Tests: Testing and inspecting agency shall make additional tests of concrete when test results indicate that slump, air entrainment, compressive strengths, or other requirements have not been met, as directed by Architect. Testing and inspecting agency may conduct tests to determine adequacy of concrete by cored cylinders complying with ASTM C 42/C 42M or by other methods as directed by Architect.
12. Additional testing and inspecting, at Contractor's expense, will be performed to determine compliance of replaced or additional work with specified requirements.
13. Correct deficiencies in the Work that test reports and inspections indicate dos not comply with the Contract Documents.

D. Measure floor and slab flatness and levelness according to ASTM E 1155 within 48 hours of finishing.

END OF SECTION 033000

SECTION 042200 - CONCRETE UNIT MASONRY

PART 1 - GENERAL

1.1 RELATED DOCUMENTS

A. Drawings and general provisions of the Contract, including General and Supplementary Conditions and Division 01 Specification Sections, apply to this Section. If differing requirements are identified elsewhere (in these specifications or on drawings or separate instructions), the more stringent requirement shall be met.

1.2 SUMMARY

A. Section Includes:

1. Concrete masonry units (CMU's).
2. Steel reinforcing bars.

1.3 PRECONSTRUCTION TESTING

A. Preconstruction Testing Service: Owner will engage a qualified independent testing agency to perform preconstruction testing indicated below. Retesting of materials that fail to comply with specified requirements shall be done at Contractor's expense.

1. Concrete Masonry Unit Test: For each type of unit required, according to ASTM C 140 for compressive strength.
2. Mortar Test (Property Specification): For each mix required, according to ASTM C 109/C 109M for compressive strength.
3. Mortar Test (Property Specification): For each mix required, according to ASTM C 780 for compressive strength.
4. Grout Test (Compressive Strength): For each mix required, according to ASTM C 1019.

1.4 SUBMITTALS

A. Product Data: For each type of product indicated.

B. Shop Drawings: For reinforcing steel. Detail bending and placement of unit masonry reinforcing bars. Comply with ACI 315, "Details and Detailing of Concrete Reinforcement." Show elevations of reinforced walls.

C. Material Certificates: Contractor to provide a certified letter stating that materials/products used on this project meet or exceed material/products specified within the contract documents.

D. Mix Designs: Contractor to provide a certified letter stating that mix designs used on this project meet or exceed mix designs specified within the contract documents.

1.5 QUALITY ASSURANCE

A. Masonry Standard: Comply with ACI 530.1/ASCE 6/TMS 602 unless modified by requirements in the Contract Documents.

1.6 PROJECT CONDITIONS

A. Cold-Weather Requirements: Do not use frozen materials or materials mixed or coated with ice or frost. Do not build on frozen substrates. Remove and replace unit masonry damaged by frost or by freezing conditions. Comply with cold-weather construction requirements contained in ACI 530.1/ASCE 6/TMS 602.

B. Hot-Weather Requirements: Comply with hot-weather construction requirements contained in ACI 530.1/ASCE 6/TMS 602.

PART 2 - PRODUCTS

2.1 MASONRY UNITS, GENERAL

A. Defective Units: Referenced masonry unit standards may allow a certain percentage of units to contain chips, cracks, or other defects exceeding limits stated in the standard. Do not use units where such defects will be exposed in the completed Work.

B. Fire-Resistance Ratings: Where indicated, provide units that comply with requirements for fire-resistance ratings indicated as determined by testing according to ASTM E 119, by equivalent masonry thickness, or by other means, as acceptable to authorities having jurisdiction.

2.2 CONCRETE MASONRY UNITS

A. Shapes: Provide shapes indicated and for lintels, corners, jambs, sashes, movement joints, headers, bonding, and other special conditions.

B. Corners: Provide bullnose block for all outside corners (wall corners, door and window jambs, wall ends) that will remain exposed to view.

C. CMUs: ASTM C 90.

1. Unit Compressive Strength: Provide units with minimum average net-area compressive strength as indicated on drawings.
2. Weight Classification: Light weight.
3. Size (Width): Manufactured to dimensions 3/8 inch less than nominal dimensions.

2.3 GLAZED BLOCK UNITS

A. Glazed Block Units: units include stretchers, jambs and caps.
   1. Astra-Glaze-SW as manufactured by Trenwyth Industries, Inc., One Connelly Road, P.O. Box 438, Emigsville, PA 17318, (800) 223-1924
   2. Spectra-Glaze II as manufactured by Burns & Russell Co., 4230 Boston St., P.O. Box 6063, Baltimore, MD 21231, (410) 837-0720
   3. Structural Glazed Facing Tile as manufactured by Stark Ceramics, Inc., P.O. Box 8880, Canton, OH 44711, (800) 321-0662

2.4 MASONRY LINTELS

A. General: Provide one of the following:

B. Concrete Lintels: ASTM C 1623, matching CMUs in color, texture, and density classification; and with reinforcing bars indicated. Provide lintels with net-area compressive strength not less than CMUs.

C. Concrete Lintels: Precast or formed-in-place concrete lintels complying with requirements in Division 03 Section "Cast-in-Place Concrete" and with reinforcing bars indicated.

D. Masonry Lintels: Prefabricated or built-in-place masonry lintels made from bond beam CMUs with reinforcing bars placed as indicated and filled with coarse grout.

2.5 MORTAR AND GROUT MATERIALS

A. Portland Cement: ASTM C 150, Type I or II, except Type III may be used for cold-weather construction. Provide natural color or white cement as required to produce mortar color indicated.

B. Hydrated Lime: ASTM C 207, Type S.

C. Portland Cement-Lime Mix: Packaged blend of portland cement and hydrated lime containing no other ingredients.

D. Masonry Cement: ASTM C 91 (for use in interior non-load-bearing walls only).

E. Mortar Cement: ASTM C 1329.

F. Mortar Pigments: Natural and synthetic iron oxides and chromium oxides, compounded for use in mortar mixes and complying with ASTM C 979. Use only pigments with a record of satisfactory performance in masonry mortar.

G. Colored Cement Product: Packaged blend made from portland cement and hydrated lime or mortar cement and mortar pigments, all complying with specified requirements, and containing no other ingredients.

H. Aggregate for Mortar: ASTM C 144.

1. For joints less than 1/4 inch thick, use aggregate graded with 100 percent passing the No. 16 sieve.
2. White-Mortar Aggregates: Natural white sand or crushed white stone.
3. Colored-Mortar Aggregates: Natural sand or crushed stone of color necessary to produce required mortar color.

I. Aggregate for Grout: ASTM C 404.

J. Cold-Weather Admixture: Nonchloride, noncorrosive, accelerating admixture complying with ASTM C 494/C 494M, Type C, and recommended by manufacturer for use in masonry mortar of composition indicated.

K. Water-Repellent Admixture: Liquid water-repellent mortar admixture intended for use with CMUs, containing integral water repellent by same manufacturer.

L. Water: Potable.

2.6 REINFORCEMENT

A. Uncoated Steel Reinforcing Bars: ASTM A 615/A 615M or ASTM A 996/A 996M, Grade 60.

B. Masonry Joint Reinforcement, General: ASTM A 951.

1. Interior Walls: Mill Hot-dip galvanized, carbon steel.
2. Exterior Walls: Hot-dip galvanized, carbon steel.
3. Wire Size for Side Rods: W1.7 or 0.148-inch diameter.
4. Wire Size for Cross Rods: W1.7 or 0.148-inch diameter.
5. Wire Size for Veneer Ties: W1.7 or 0.148-inch diameter.
6. Spacing of Cross Rods, Tabs, and Cross Ties: Not more than 16 inches o.c.
7. Provide in lengths of not less than 10 feet , with prefabricated corner and tee units.

C. Masonry Joint Reinforcement for Multiwythe Masonry:

1. Adjustable (two-piece) type, either ladder or truss design, with one side rod at each face shell of backing wythe and with separate ties that extend into facing wythe. Ties have two hooks that engage eyes or slots in reinforcement and resist movement perpendicular to wall. Ties extend at least halfway through facing wythe but with at least 5/8-inch cover on outside face.

2.7 TIES AND ANCHORS

A. Materials: Provide ties and anchors specified in this article that are made from materials that comply with the following unless otherwise indicated.

1. Hot-Dip Galvanized, Carbon-Steel Wire: ASTM A 82/A 82M; with ASTM A 153/A 153M, Class B-2 coating.

2. Steel Sheet, Galvanized after Fabrication: ASTM A 1008/A 1008M, Commercial Steel, with ASTM A 153/A 153M, Class B coating.
3. Steel Plates, Shapes, and Bars: ASTM A 36/A 36M.

B. Adjustable Anchors for Connecting to Structural Steel Framing: Provide anchors that allow vertical or horizontal adjustment but resist tension and compression forces perpendicular to plane of wall.

1. Anchor Section for Welding to Steel Frame: Crimped 1/4-inch- diameter, hot-dip galvanized steel wire.
2. Tie Section: Triangular-shaped wire tie, sized to extend within 1 inch of masonry face, made from 0.25-inch diameter, hot-dip galvanized steel wire.

C. Adjustable Anchors for Connecting to Concrete: Provide anchors that allow vertical or horizontal adjustment but resist tension and compression forces perpendicular to plane of wall.

1. Connector Section: Dovetail tabs for inserting into dovetail slots in concrete and attached to tie section; formed from 0.060-inch- thick, steel sheet, galvanized after fabrication.
2. Tie Section: Triangular-shaped wire tie, sized to extend within 1 inch of masonry face, made from 0.25-inch- diameter, hot-dip galvanized steel wire.
3. Corrugated Metal Ties: Metal strips not less than 7/8 inch wide with corrugations having a wavelength of 0.3 to 0.5 inch and an amplitude of 0.06 to 0.10 inch made from [0.060-inch- thick, steel sheet, galvanized after fabrication] [0.075-inch- thick, steel sheet, galvanized after fabrication] [01.05-inch- thick, steel sheet, galvanized after fabrication] with dovetail tabs for inserting into dovetail slots in concrete and sized to extend to within 1 inch of masonry face.

D. Rigid Anchors: Fabricate from steel bars 1-1/2 inches wide by 1/4 inch thick by 24 inches long, with ends turned up 2 inches or with cross pins unless otherwise indicated.

E. Anchor Bolts: Headed steel bolts complying with ASTM A 307, Grade A; with ASTM A 563 hex nuts and, where indicated, flat washers; hot-dip galvanized to comply with ASTM A 153/A 153M, Class C; of dimensions indicated.

2.8 MISCELLANEOUS MASONRY ACCESSORIES

A. Bond-Breaker Strips: Asphalt-saturated, organic roofing felt complying with ASTM D 226, Type I (No. 15 asphalt felt).

2.9 MORTAR AND GROUT MIXES

A. General: Do not use admixtures, including pigments, air-entraining agents, accelerators, retarders, water-repellent agents, antifreeze compounds, or other admixtures, unless otherwise indicated.

1. Do not use calcium chloride in mortar or grout.

2. Limit cementitious materials in mortar to portland cement, mortar cement, and lime.
3. Limit cementitious materials in mortar for exterior and reinforced masonry to portland cement, mortar cement, and lime.
4. Add cold-weather admixture (if used) at same rate for all mortar that will be exposed to view, regardless of weather conditions, to ensure that mortar color is consistent.

B. Preblended, Dry Mortar Mix: Furnish dry mortar ingredients in form of a preblended mix. Measure quantities by weight to ensure accurate proportions, and thoroughly blend ingredients before delivering to Project site.

C. Mortar for Unit Masonry: Comply with ASTM C 270 and BIA Technical Notes 8A, Property Specification. Provide the following types of mortar for applications stated unless another type is indicated.

1. For masonry below grade or in contact with earth, use Type M or S.
2. For reinforced masonry, use Type S.
3. For mortar parge coats, use Type S.
4. For exterior, above-grade, load-bearing and non-load-bearing walls and parapet walls Type S
5. For interior load-bearing walls, Type S
6. For interior non-load-bearing partitions; and for other applications where another type is not indicated, use Type N.

D. Grout for Unit for dimensions of grout spaces and Masonry: Comply with ASTM C 476.

1. Use grout of type indicated or, if not otherwise indicated, of type (fine or coarse) that will comply with Table 1.15.1 in ACI 530.1/ASCE 6/TMS 602 pour height.
2. Provide grout with a slump of 8 to 11 inches as measured according to ASTM C 143/C 143M.

PART 3 - EXECUTION

3.1 TOLERANCES

A. Dimensions and Locations of Elements:

1. For dimensions in cross section or elevation do not vary by more than plus 1/2 inch or minus 1/4 inch.
2. For location of elements in plan do not vary from that indicated by more than plus or minus 1/2 inch.
3. For location of elements in elevation do not vary from that indicated by more than plus or minus 1/4 inch in a story height or 1/2 inch total.

B. Lines and Levels:

1. For bed joints and top surfaces of bearing walls do not vary from level by more than 1/4 inch in 10 feet, or 1/2 inch maximum.

2. For conspicuous horizontal lines, such as lintels, sills, parapets, and reveals, do not vary from level by more than 1/8 inch in 10 feet, 1/4 inch in 20 feet, or 1/2 inch maximum.
3. For vertical lines and surfaces do not vary from plumb by more than 1/4 inch in 10 feet, 3/8 inch in 20 feet, or 1/2 inch maximum.
4. For conspicuous vertical lines, such as external corners, door jambs, reveals, and expansion and control joints, do not vary from plumb by more than 1/8 inch in 10 feet, 1/4 inch in 20 feet, or 1/2 inch maximum.
5. For lines and surfaces do not vary from straight by more than 1/4 inch in 10 feet, 3/8 inch in 20 feet, or 1/2 inch maximum.

C. Joints:

1. For bed joints, do not vary from thickness indicated by more than plus or minus 1/8 inch, with a maximum thickness limited to 1/2 inch.
2. For head and collar joints, do not vary from thickness indicated by more than plus 3/8 inch or minus 1/4 inch.
3. For exposed head joints, do not vary from thickness indicated by more than plus or minus 1/8 inch.

3.2 LAYING MASONRY WALLS

A. Lay out walls in advance for accurate spacing of surface bond patterns with uniform joint thicknesses and for accurate location of openings, movement-type joints, returns, and offsets. Avoid using less-than-half-size units, particularly at corners, jambs, and, where possible, at other locations.

B. Use full-size units without cutting if possible. If cutting is required to provide a continuous pattern or to fit adjoining construction, cut units with motor-driven saws; provide clean, sharp, unchipped edges. Allow units to dry before laying unless wetting of units is specified. Install cut units with cut surfaces and, where possible, cut edges concealed.

C. Bond Pattern for Exposed Masonry: Unless otherwise indicated, lay exposed masonry in running bond; do not use units with less than nominal 4-inch horizontal face dimensions at corners or jambs.

D. Built-in Work: As construction progresses, build in items specified in this and other Sections. Fill in solidly with masonry around built-in items.

E. Fill space between steel frames and masonry solidly with mortar unless otherwise indicated.

F. Where built-in items are to be embedded in cores of hollow masonry units, place a layer of metal lath, wire mesh, or plastic mesh in the joint below and rod mortar or grout into core.

G. Fill cores in hollow CMUs with grout 24 inches under bearing plates, beams, lintels, posts, and similar items unless otherwise indicated.

3.3 MORTAR BEDDING AND JOINTING

A. Lay hollow CMUs as follows:

1. With face shells fully bedded in mortar and with head joints of depth equal to bed joints.
2. With webs fully bedded in mortar in all courses of piers, columns, and pilasters.
3. With webs fully bedded in mortar in grouted masonry, including starting course on footings.
4. With entire units, including areas under cells, fully bedded in mortar at starting course on footings where cells are not grouted.

B. Lay solid masonry units with completely filled bed and head joints; butter ends with sufficient mortar to fill head joints and shove into place. Do not deeply furrow bed joints or slush head joints.

C. Tool exposed joints slightly concave when thumbprint hard, using a jointer larger than joint thickness unless otherwise indicated.

D. Rake joints of glazed block for grouting by the tile contractor at the time of floor tile installation grouting.

E. Cut joints flush for masonry walls to receive plaster or other direct-applied finishes (other than paint) unless otherwise indicated.

3.4 CONTROL AND EXPANSION JOINTS

A. General: Install control and expansion joint materials in unit masonry as masonry progresses. Do not allow materials to span control and expansion joints without provision to allow for in-plane wall or partition movement.

B. Form control joints in concrete masonry:

1. Fit bond-breaker strips into hollow contour in ends of concrete masonry units on one side of control joint. Fill resultant core with grout and rake out joints in exposed faces for application of sealant.

3.5 MASONRY JOINT REINFORCEMENT

A. General: Install entire length of longitudinal side rods in mortar with a minimum cover of 5/8 inch on exterior side of walls, 1/2 inch elsewhere. Lap reinforcement a minimum of 6 inches.

1. Space reinforcement not more than 16 inches o.c.
2. Space reinforcement not more than 8 inches o.c. in foundation walls and parapet walls.
3. Provide reinforcement not more than 8 inches above and below wall openings and extending 12 inches beyond openings in addition to continuous reinforcement.

B. Interrupt joint reinforcement at control and expansion joints unless otherwise indicated.

C. Provide continuity at wall intersections by using prefabricated T-shaped units.

D. Provide continuity at corners by using prefabricated L-shaped units.

3.6 ANCHORING MASONRY TO STRUCTURAL STEEL AND CONCRETE

A. Anchor masonry to structural steel and concrete where masonry abuts or faces structural steel or concrete to comply with the following:

1. Provide an open space not less than 1/2 inch wide between masonry and structural steel or concrete unless otherwise indicated. Keep open space free of mortar and other rigid materials.
2. Anchor masonry with anchors embedded in masonry joints and attached to structure.
3. Space anchors as indicated, but not more than 24 inches o.c. vertically and 36 inches o.c. horizontally.

3.7 REINFORCED UNIT MASONRY INSTALLATION

A. Temporary Formwork and Shores: Construct formwork and shores as needed to support reinforced masonry elements during construction.

1. Construct formwork to provide shape, line, and dimensions of completed masonry as indicated. Make forms sufficiently tight to prevent leakage of mortar and grout. Brace, tie, and support forms to maintain position and shape during construction and curing of reinforced masonry.
2. Do not remove forms and shores until reinforced masonry members have hardened sufficiently to carry their own weight and other loads that may be placed on them during construction.

B. Placing Reinforcement: Comply with requirements in ACI 530.1/ASCE 6/TMS 602.

C. Grouting: Do not place grout until entire height of masonry to be grouted has attained enough strength to resist grout pressure.

1. Comply with requirements in ACI 530.1/ASCE 6/TMS 602 for cleanouts and for grout placement, including minimum grout space and maximum pour height.
2. Limit height of vertical grout pours to not more than 60 inches.

3.8 FIELD QUALITY CONTROL

A. Testing and Inspecting: Owner will engage special inspectors to perform tests and inspections and prepare reports. Allow inspectors access to scaffolding and work areas, as needed to perform tests and inspections. Retesting of materials that fail to meet specified requirements shall be done at Contractor's expense.

B. Inspections: Level 1 special inspections according to the "International Building Code."

1. Begin masonry construction only after inspectors have verified proportions of site-prepared mortar.
2. Place grout only after inspectors have verified compliance of grout spaces and of grades, sizes, and locations of reinforcement.
3. Place grout only after inspectors have verified proportions of site-prepared grout.

C. Testing Prior to Construction: One set of tests.

D. Testing Frequency: One set of tests for each 1500 sq. ft. of wall area or portion thereof.

E. Concrete Masonry Unit Test: For each type of unit provided, according to ASTM C 140 for compressive strength.

F. Grout Test (Compressive Strength): For each mix provided, according to ASTM C 1019.

3.9 PARGING

A. Parge exterior faces of below-grade masonry walls, where indicated, in 2 uniform coats to a total thickness of 3/4 inch.

B. Use a steel-trowel finish to produce a smooth, flat, dense surface. Form a wash at top of parging and a cove at bottom.

C. Damp-cure parging for at least 24 hours and protect parging until cured.

3.10 REPAIRING, POINTING, AND CLEANING

A. In-Progress Cleaning: Clean unit masonry as work progresses by dry brushing to remove mortar fins and smears before tooling joints.

B. Final Cleaning: After mortar is thoroughly set and cured, clean exposed masonry as follows:

1. Test cleaning methods on sample wall panel; leave one-half of panel uncleaned for comparison purposes.
2. Clean concrete masonry by cleaning method indicated in NCMA TEK 8-2A applicable to type of stain on exposed surfaces.

3.11 MASONRY WASTE DISPOSAL

A. Waste Disposal as Fill Material: Dispose of clean masonry waste, including excess or soil-contaminated sand, waste mortar, and broken masonry units, by crushing and mixing with fill material as fill is placed.

1. Do not dispose of masonry waste as fill within 18 inches of finished grade.

B. Excess Masonry Waste: Remove excess clean masonry waste that cannot be used as fill, as described above, and other masonry waste, and legally dispose of off Owner's property.

END OF SECTION 042200

SECTION 04240
VENEER MASONRY

PART 1 GENERAL

1.01 SECTION INCLUDES

A. Brick veneer

B. Mortar and masonry grout

C. Masonry accessories

1.02 ALLOWANCES

A. Face Brick: allow $700.00 per thousand for material and delivery of face brick, see Conditions of the Contract and General Requirements for additional information on allowance.

1.03 REFERENCES

A. BIA Technical Note 1, All-Weather Construction.

B. BIA Technical Note 8, Mortar for Brick Masonry.

C. BIA Technical Note 7B, Water Resistance of Brick Masonry Construction and Workmanship Part III of III.

D. BIA Technical Note 21C, Brick Masonry Cavity Walls Construction.

E. BIA Technical Note 44B, Wall Ties for Brick Masonry

1.04 ENVIRONMENTAL REQUIREMENTS

A. Provide weather protection for conditions anticipated; maintain materials in appropriate temperature and humidity.

PART 2 PRODUCTS

2.01 STONE VENEER

A. Existing. Salvaged from removed chimney.

2.02 MORTARS

A. Mortar Materials as follows:

1. Portland Cement - ASTM C150, type required for mix.
2. Masonry Cement - ASTM C91
3. Hydrated Lime - ASTM C207, type required for mix.
4. Aggregate - ASTM C144, natural sand.

5. Water - clean, and free of deleterious acids, alkalis, or organic materials.
6. Mortar coloring - mineral oxide, color and percentage as selected by Architect.

B. Mortar Mixes - ASTM C270 Type N with integral waterproofing (dry block)

C. Mortar Color: Submit manufacturers samples for select, provide mock up for acceptance.

2.03 ACCESSORIES

A. Manufactured Control Joints: Closed cell neoprene sponge, for 3/8 joint x 3 inches.

B. Weeps: Weep Vent as manufactured by Mortar Net, 3641 Ridge Road, Highland, IN 46322, (800) 664-6638.

C. Flashing 40 mils self-adhesive rubberized asphalt/cross-laminated, high-density polyethylene film:

1. Perm-A-Barrier Wall Flashing manufactured by Grace Construction Products, 62 Whittemore Avenue, Cambridge, MA 02140 (800) 444-6459

D. Cell Vent: 2 1/2" high by 3 1/2" deep, UV resistant polypropylene

E. Veneer ties (stud backup wall): DW-10-X hot dipped galvanized, 3/16” x 4 ½” wire vee tie with 40 mil polyethylene/polymer-modified asphalt membrane moisture seal and 2 screws per plate manufactured by Hohmann & Barnard, Inc., 30 Rasons Court, P.O. Box 5270, Hauppauge, NY 11788-0270, (516) 234-0600

F. Cavity weep protection: select from the following

1. The Mortar Net as manufactured by Mortar Net USA, Ltd., 3641 Ridge Road, Highland, IN 46322, (800) 664-6638.
2. Mortar Break II by Advanced Building Products

PART 3 EXECUTION

3.01 MORTAR AND GROUT

A. Proportion mortar mix as indicated in NCMA-TEK 9-1A for type required, mix thoroughly in quantities needed for immediate use in accordance with ASTM C270.

B. Do not use anti-freeze compounds, retarders or calcium chloride admixtures. Do not use calcium chloride.

C. Retemper mortars if water is lost by evaporation only within two hours of mixing.

D. Use mortar within two hours after mixing at temperatures of 80 degrees F or two-and-one-half hours at temperatures under 50 degrees F. Grout not placed within 1-1/2 hours after water is first added shall be discarded.

E. Install mortar in accordance with ASTM C780. Tool joints flush. Form mortar to contours of flutes.

3.02 COURSING

A. Establish lines, levels, and coursing indicated. Protect from displacement.

B. Maintain masonry courses to uniform dimension. Form vertical and horizontal joints of uniform thickness.

C. Lay masonry units in bonds as indicated in drawings.

3.03 PLACING AND BONDING

A. Lay hollow masonry units with face shell bedding on head and bed joints.

B. Lay solid masonry units in full bed of mortar, with full head joints, uniformly jointed with other work.

C. Buttering corners of joints or excessive furrowing of mortar joints are not permitted.

D. Remove excess mortar as Work progresses.

E. Interlock intersections and external corners.

F. Do not shift or tap masonry units after mortar has achieved initial set. Where adjustment must be made, remove mortar and replace.

G. Perform job site cutting of masonry units with proper tools to provide straight, clean, unchipped edges. Prevent broken masonry unit corners or edges.

3.04 MASONRY FLASHING

A. Install flashing at locations in accordance with NCMA-TEK 19-4A & 19-5A and as indicated on drawings.

B. Lap joints and corners, end dam at terminations. Seal joints watertight.

C. Grout solid behind and beneath flashings in masonry cavities.

D. Provide cavity weep protection to 12 inches above flashing.

3.05 WEEPS

A. Install weeps forms in veneer at 16 inches on center horizontally above through wall flashing at shelf angles and at bottom of walls.

B. After mortar has set remove weeps forms from wall.

3.06 VENTS

A. Install vents in veneer at 32 inches on center horizontally at top of walls cavity or where cavity is interrupted by wall openings.

3.07 CONTROL JOINTS

A. Locate control joints where shown on drawings.

B. Install preformed control joint device in continuous lengths. Seal butt and corner joints in accordance with manufacturer's instructions.

C. Size control joint in accordance with manufacturer's requirements.

3.08 CLEANING

A. Clean work under provisions of the General Requirements.

B. Remove excess mortar and mortar smears.

C. Replace defective mortar. Match adjacent work.

D. Clean soiled surfaces with cleaning solution.

E. Use non-metallic tools in cleaning operations.

3.09 PROTECTION OF FINISHED WORK

A. Protect finished installation under provisions of the General Requirements.

B. Without damaging completed work, provide protective boards at exposed external corners that may be damaged by construction activities.

END OF SECTION

SECTION 051200 - STRUCTURAL STEEL FRAMING

PART 1 - GENERAL

1.1 RELATED DOCUMENTS

A. Drawings and general provisions of the Contract, including General and Supplementary Conditions and Division 01 Specification Sections, apply to this Section. If differing requirements are identified elsewhere (in these specifications or on drawings or separate instructions), the more stringent requirement shall be met.

1.2 SUMMARY

A. Section includes structural steel and grout.

B. Related Sections:

1. Division 05 Section "Architecturally Exposed Structural Steel Framing" for additional requirements for architecturally exposed structural steel.

1.3 DEFINITIONS

A. Structural Steel: Elements of structural-steel frame, as classified by AISC 303, "Code of Standard Practice for Steel Buildings and Bridges."

1.4 PERFORMANCE REQUIREMENTS

A. Connections: Provide details of simple shear connections required by the Contract Documents to be selected or completed by structural-steel fabricator to withstand loads indicated and comply with other information and restrictions indicated.

1. Select and complete connections using schematic details indicated and AISC 360.
2. Use ASD; data are given at service-load level

B. Moment Connections: Type FR, full□restrained.

1.5 SUBMITTALS

A. Product Data: Contractor to provide a certified letter stating that materials/products used on this project meet or exceed material/products specified within the contract documents.

B. Shop Drawings: Show fabrication of structural-steel components.

C. Source quality-control reports.

1.6 QUALITY ASSURANCE

A. Fabricator Qualifications: A qualified fabricator that participates in the AISC Quality Certification Program and is designated an AISC-Certified Plant, Category STD, or a fabricator that can provide documentation that their process meets or exceeds AISC standards.

B. Installer Qualifications: A qualified installer who participates in the AISC Quality Certification Program and is designated an AISC-Certified Erector, Category CSE, or that can provide documentation through references that they have done this type of work for more than 5 years.

C. Welding Qualifications: Qualify procedures and personnel according to AWS D1.1/D1.1M, "Structural Welding Code - Steel."

D. Comply with applicable provisions of the following specifications and documents:

1. AISC 303.
2. AISC 360.
3. RCSC's "Specification for Structural Joints Using ASTM A 325 or A 490 Bolts."

E. Preinstallation Conference: Conduct conference at Project site.

PART 2 - PRODUCTS

2.1 STRUCTURAL-STEEL MATERIALS

A. W-Shapes: ASTM A 992/A 992M.

B. Channels, Angles, S-Shapes: ASTM A 36/A 36M.

C. Plate and Bar: ASTM A 36/A 36M.

D. Cold-Formed Hollow Structural Sections: ASTM A 500, Grade B, structural tubing.

E. Steel Pipe: ASTM A 53/A 53M, Type E or S, Grade B.

F. Welding Electrodes: Comply with AWS requirements

2.2 BOLTS, CONNECTORS, AND ANCHORS

A. High-Strength Bolts, Nuts, and Washers: ASTM A 325, Type 1, heavy hex steel structural bolts; ASTM A 563 heavy hex carbon-steel nuts; and ASTM F 436 hardened carbon-steel washers.

1. Finish: Plain.

2. Direct-Tension Indicators: Squirter DTI's by Applied Bolting Technology.

3. Twist-Off Type Tension Control Bolts: ASTM F1852

4. Direct-Tension Indicators: ASTM F 959, Type 325 compressible-washer type.

B. High-Strength Bolts, Nuts, and Washers: ASTM A 490, Type 1, heavy hex steel structural bolts or tension-control, bolt-nut-washer assemblies with splined ends; ASTM A 563 heavy hex carbon-steel nuts; and ASTM F 436 hardened carbon-steel washers, plain.

1. Direct-Tension Indicators: Squirter DTI's by Applied Bolting Technology.

2. Twist-Off Type Tension Control Bolts: ASTM F1852

3. Direct-Tension Indicators: ASTM F 959, Type 490 compressible-washer type.

C. Zinc-Coated High-Strength Bolts, Nuts, and Washers: ASTM A 325, Type 1, heavy-hex steel structural bolts; ASTM A 563, Grade DH heavy-hex carbon-steel nuts; and ASTM F 436, Type 1, hardened carbon-steel washers.

1. Finish: Hot-dip zinc coating.

2. Direct-Tension Indicators: Squirter DTI's by Applied Bolting Technology.

3. Twist-Off Type Tension Control Bolts: ASTM F1852

4. Direct-Tension Indicators: ASTM F 959, Type 490 compressible-washer type.

D. Shear Connectors: ASTM A 108, Grades 1015 through 1020, headed-stud type, cold-finished carbon steel; AWS D1.1/D1.1M, Type B.

E. Headed Anchor Rods: ASTM A36 or ASTM F 1554, Grade 55, weldable, straight.

1. Nuts: ASTM A 563 hex carbon steel.
2. Plate Washers: ASTM A 36/A 36M carbon steel.
3. Washers: ASTM F 436 hardened carbon steel.
4. Finish: Plain, unless noted.

F. Threaded Rods: ASTM A 36/A 36M.

1. Nuts: ASTM A 563 hex carbon steel.
2. Washers: ASTM F 436 hardened carbon steel.
3. Finish: Plain.

2.3 PRIMER

A. Primer: Fabricator's standard lead- and chromate-free, nonasphaltic, rust-inhibiting primer.

B. Zinc Primer: One of the following:

1. Sherwin Williams – Zinc Clad 5
2. Tnemec – Tneme Zinc 90E-92 or approved equal.

C. Galvanizing Repair Paint: ASTM A 780.

2.4 GROUT

A. Nonmetallic, Shrinkage-Resistant Grout: ASTM C 1107, factory-packaged, nonmetallic aggregate grout, noncorrosive, nonstaining, mixed with water to consistency suitable for application and a 30-minute working time.

2.5 FABRICATION

A. Structural Steel: Fabricate and assemble in shop to greatest extent possible. Fabricate according to AISC's "Code of Standard Practice for Steel Buildings and Bridges" and AISC 360.

B. Thermal Cutting: Perform thermal cutting by machine to greatest extent possible.

1. Plane thermally cut edges to be welded to comply with requirements in AWS D1.1/D1.1M.

C. Bolt Holes: Drill, mechanically thermal cut, or punch standard bolt holes perpendicular to metal surfaces.

D. Finishing: Accurately finish ends of columns and other members transmitting bearing loads.

E. Cleaning: At a minimum clean and prepare steel surfaces that are to remain unpainted according to SSPC-SP 2, "Hand Tool Cleaning."

F. Shear Connectors: Prepare steel surfaces as recommended by manufacturer of shear connectors. Use automatic end welding of headed-stud shear connectors according to AWS D1.1/D1.1M and manufacturer's written instructions.

2.6 SHOP CONNECTIONS

A. High-Strength Bolts snug tightened unless indicated: Shop install high-strength bolts according to RCSC's "Specification for Structural Joints Using ASTM A 325 or A 490 Bolts" for type of bolt and for snug tightened joint.

B. High-Strength Bolts pretensioned and slip critical: Shop install high-strength bolts according to RCSC's "Specification for Structural Joints Using ASTM A 325 or A 490 Bolts" for type of bolt, type of joint specified, and as follows
1. Prepare surface as required for type of joint specified.
2. Install specification approved bolt or washer type connection.
3. For “Squirter DTI’s” tighten connection with all needed washers as indicated in installation instructions.

4. All bolt installation shall be done under the direct supervision of an inspector or shop certified quality control individual.

C. Weld Connections: Comply with AWS D1.1/D1.1M for tolerances, appearances, welding procedure specifications, weld quality, and methods used in correcting welding work.

2.7 SHOP PRIMING

A. Shop prime steel surfaces except the following:

1. Surfaces embedded in concrete or mortar. Extend priming of partially embedded members to a depth of 2 inches.
2. Surfaces to be field welded.
3. Surfaces to be high-strength bolted with slip-critical connections.
4. Surfaces to receive sprayed fire-resistive materials (applied fireproofing).
5. Galvanized surfaces.

B. Surface Preparation: Clean surfaces to be painted. Remove loose rust and mill scale and spatter, slag, or flux deposits. Prepare surfaces according to the following specifications and standards:

1. SSPC-SP 2, "Hand Tool Cleaning."
2. SSPC-SP 3, "Power Tool Cleaning."

C. Zinc Primed Surface Preparation: Clean surfaces to be painted. Remove loose rust and mill scale and spatter, slag, or flux deposits. Prepare surfaces according to SSPC-SP 6/NACE No. 3, "Commercial Blast Cleaning."

D. Priming: Immediately after surface preparation, apply primer according to manufacturer's written instructions and at rate recommended by SSPC to provide a minimum dry film thickness of 1.5 mils. Use priming methods that result in full coverage of joints, corners, edges, and exposed surfaces.

2.8 SOURCE QUALITY CONTROL

A. Testing Agency: Owner will engage an independent testing and inspecting agency to perform shop tests and inspections and prepare test reports.

1. Provide testing agency with access to places where structural-steel work is being fabricated or produced to perform tests and inspections.

B. Correct deficiencies in Work that test reports and inspections indicate does not comply with the Contract Documents.

C. Bolted Connections: Shop-bolted connections will be tested and inspected according to RCSC's "Specification for Structural Joints Using ASTM A 325 or A 490 Bolts."

D. Welded Connections: All welds will be 100% visually inspected, in addition to visual inspection 10% of shop-welded connections and 100% of all complete or partial

penetration welds will be tested and inspected according to AWS D1.1/D1.1M and the following inspection procedures, at testing agency's option:

1. Liquid Penetrant Inspection: ASTM E 165.
2. Magnetic Particle Inspection: ASTM E 709; performed on root pass and on finished weld. Cracks or zones of incomplete fusion or penetration will not be accepted.
3. Ultrasonic Inspection: ASTM E 164.
4. Radiographic Inspection: ASTM E 94.

PART 3 - EXECUTION

3.1 EXAMINATION

A. Verify, with steel Erector present, elevations of concrete- and masonry-bearing surfaces and locations of anchor rods, bearing plates, and other embedments for compliance with requirements.

B. Proceed with installation only after unsatisfactory conditions have been corrected.

3.2 ERECTION

A. Set structural steel accurately in locations and to elevations indicated and according to AISC 303 and AISC 360.

B. Base, Bearing, and Leveling Plates: Clean concrete- and masonry-bearing surfaces of bond-reducing materials, and roughen surfaces prior to setting plates. Clean bottom surface of plates.

1. Set plates for structural members on wedges, shims, or setting nuts as required.
2. Weld plate washers to top of baseplate.
3. Snug-tighten anchor rods after supported members have been positioned and plumbed. Do not remove wedges or shims but, if protruding, cut off flush with edge of plate before packing with grout.
4. Promptly pack grout solidly between bearing surfaces and plates so no voids remain. Neatly finish exposed surfaces; protect grout and allow to cure. Comply with manufacturer's written installation instructions for shrinkage-resistant grouts.

C. Maintain erection tolerances of structural steel within AISC's "Code of Standard Practice for Steel Buildings and Bridges."

3.3 FIELD CONNECTIONS

A. High-Strength Bolts snug tightened unless indicated: Shop install high-strength bolts according to RCSC's "Specification for Structural Joints Using ASTM A 325 or A 490 Bolts" for type of bolt and for snug tightened joint.

B. High-Strength Bolts pretensioned and slip critical: Shop install high-strength bolts according to RCSC's "Specification for Structural Joints Using ASTM A 325 or A 490 Bolts" for type of bolt, type of joint specified, and as follows
   1. Prepare surface as required for type of joint specified.
   2. Install specification approved bolt or washer type connection.
   3. For “Squirter DTI’s” tighten connection with all needed washers as indicated in installation instructions.

   4. All bolt installation shall be done under the direct supervision of an inspector.

C. Weld Connections: Comply with AWS D1.1/D1.1M and AWS D1.8/D1.8M for tolerances, appearances, welding procedure specifications, weld quality, and methods used in correcting welding work.

   1. Comply with AISC 303 and AISC 360 for bearing, alignment, adequacy of temporary connections, and removal of paint on surfaces adjacent to field welds.

3.4 FIELD QUALITY CONTROL

A. Testing Agency: Owner will engage a qualified independent testing and inspecting agency to inspect field welds and high-strength bolted connections.

B. Bolted Connections: Bolted connections will be tested and inspected according to RCSC's "Specification for Structural Joints Using ASTM A 325 or A 490 Bolts."

C. Welded Connections: All field welds at a minimum will be visually inspected according to AWS D1.1/D1.1M.

   1. In addition to 100% visual inspection, 10% of all field fillet welds and 100% all complete or partial penetration welds will be tested and inspected according to AWS D1.1/D1.1M and the following inspection procedures, at testing agency's option:

      a. Liquid Penetrant Inspection: ASTM E 165.
      b. Magnetic Particle Inspection: ASTM E 709; performed on root pass and on finished weld. Cracks or zones of incomplete fusion or penetration will not be accepted.
      c. Ultrasonic Inspection: ASTM E 164.
      d. Radiographic Inspection: ASTM E 94.

D. Correct deficiencies in Work that test reports and inspections indicate does not comply with the Contract Documents.

3.5 3.5 REPAIRS AND PROTECTION

A. Galvanized Surfaces: Clean areas where galvanizing is damaged or missing and repair galvanizing to comply with ASTM A 780.

B. Touchup Painting: Immediately after erection, clean exposed areas where primer is damaged or missing and paint with the same material as used for shop painting to comply with SSPC-PA 1 for touching up shop-painted surfaces.

1. Clean and prepare surfaces by SSPC-SP 2 hand-tool cleaning or SSPC-SP 3 power-tool cleaning.

C. Touchup Painting: Cleaning and touchup painting are specified in Division 09 painting Sections.

END OF SECTION 051200

SECTION 053100 - STEEL DECKING

PART 1 - GENERAL

1.1 RELATED DOCUMENTS

A. Drawings and general provisions of the Contract, including General and Supplementary Conditions and Division 01 Specification Sections, apply to this Section. If differing requirements are identified elsewhere (in these specifications or on drawings or separate instructions), the more stringent requirement shall be met.

1.2 SUMMARY

A. This Section includes the following:

1. Roof deck.
2. Noncomposite form deck.

1.3 SUBMITTALS

A. Product Data: For each type of deck, accessory, and product indicated.

B. Shop Drawings: Show layout and types of deck panels, anchorage details, reinforcing channels, pans, cut deck openings, special jointing, accessories, and attachments to other construction.

C. Product certificates.

D. Welding certificates.

E. Field quality-control test and inspection reports.

F. Research/Evaluation Reports: For steel deck.

1.4 QUALITY ASSURANCE

A. Welding: Qualify procedures and personnel according to AWS D1.3, "Structural Welding Code - Sheet Steel."

B. AISI Specifications: Comply with calculated structural characteristics of steel deck according to AISI's "North American Specification for the Design of Cold-Formed Steel Structural Members."

1.5 DELIVERY, STORAGE, AND HANDLING

A. Protect steel deck from corrosion, deformation, and other damage during delivery, storage, and handling.

B. Stack steel deck on platforms or pallets and slope to provide drainage. Protect with a waterproof covering and ventilate to avoid condensation.

PART 2 - PRODUCTS

2.1 MANUFACTURERS

A. Available Manufacturers: “SDI” certified and subject to compliance with “SDI” requirements.

2.2 ROOF DECK

A. Steel Roof Deck: Fabricate panels, without top-flange stiffening grooves, to comply with "SDI Specifications and Commentary for Steel Roof Deck," in SDI Publication No. 30, and with the following:

1. Galvanized and Shop-Primed Steel Sheet: ASTM A 653/A 653M, Structural Steel (SS), Grade 33 minimum, G60 zinc coating; cleaned, pretreated, and primed with manufacturer's standard baked-on, rust-inhibitive primer.

    a. Color: Manufacturer's standard.

2. Deck Profile: As indicated.
3. Profile Depth: As indicated.
4. Design Uncoated-Steel Thickness: As indicated.

2.3 NONCOMPOSITE FORM DECK

A. Noncomposite Steel Form Deck: Fabricate ribbed-steel sheet noncomposite form-deck panels to comply with "SDI Specifications and Commentary for Noncomposite Steel Form Deck," in SDI Publication No. 30, with the minimum section properties indicated, and with the following:

1. Galvanized Steel Sheet: ASTM A 653/A 653M, Structural Steel (SS), Grade 33 minimum, G60 zinc coating.
2. Profile Depth: As indicated.
3. Design Uncoated-Steel Thickness: As indicated.
4. Span Condition: As indicated.

2.4 ACCESSORIES

A. General: Provide manufacturer's standard accessory materials for deck that comply with requirements indicated.

B. Mechanical Fasteners: Corrosion-resistant, low-velocity, power-actuated or pneumatically driven carbon-steel fasteners; or self-drilling, self-threading screws.

C. Side-Lap Fasteners: Corrosion-resistant, hexagonal washer head; self-drilling, carbon-steel screws, No. 10 minimum diameter.

D. Weld Washers: Uncoated steel sheet, shaped to fit deck rib, 0.0598 inch thick, with factory-punched hole of 3/8-inch minimum diameter.

E. Flexible Closure Strips: Vulcanized, closed-cell, synthetic rubber.

F. Pour Stops and Girder Fillers: Steel sheet, minimum yield strength of 33,000 psi, of same material and finish as deck, and of thickness and profile recommended by SDI Publication No. 30 for overhang and slab depth or as indicated.

G. Column Closures, End Closures, Z-Closures, and Cover Plates: Steel sheet, of same material, finish, and thickness as deck, unless otherwise indicated.

H. Miscellaneous Sheet Metal Deck Accessories: Steel sheet, minimum yield strength of 33,000 psi, not less than 0.0359-inch design uncoated thickness, of same material and finish as deck; of profile indicated or required for application.

I. Recessed Sump Pans: Single-piece steel sheet, 0.0747 inch thick, of same material and finish as deck, with 3-inch- wide flanges and sloped recessed pans of 1-1/2-inch minimum depth. For drains, cut holes in the field.

J. Flat Sump Plate: Single-piece steel sheet, 0.0747 inch thick, of same material and finish as deck. For drains, cut holes in the field.

K. Galvanizing Repair Paint: ASTM A 780, with dry film containing a minimum of 94 percent zinc dust by weight.

L. Repair Paint: Manufacturer's standard rust-inhibitive primer of same color as primer.

PART 3 - EXECUTION

3.1 INSTALLATION

A. Install deck panels and accessories according to applicable specifications and commentary in SDI Publication No. 30, manufacturer's written instructions, requirements in this Section, and as indicated.

B. Place deck panels on supporting frame and adjust to final position with ends accurately aligned and bearing on supporting frame before being permanently fastened. Do not stretch or contract side-lap interlocks.

C. Place deck panels flat and square and fasten to supporting frame without warp or deflection.

D. Cut and neatly fit deck panels and accessories around openings and other work projecting through or adjacent to deck.

E. Provide additional reinforcement and closure pieces at openings as required for strength, continuity of deck, and support of other work.

F. Comply with AWS requirements and procedures for manual shielded metal arc welding, appearance and quality of welds, and methods used for correcting welding work.

G. Mechanical fasteners may be used in lieu of welding to fasten deck. Locate mechanical fasteners and install according to deck manufacturer's written instructions.

H. End Bearing: Install deck ends over supporting frame with a minimum end bearing of 1-1/2 inches.

I. Roof Sump Pans and Sump Plates: Install over openings provided in roof deck and weld mechanically fasten flanges to top of deck. Space mechanical fasteners not more than 12 inches apart with at least one fastener at each corner.

1. Install reinforcing channels or zees in ribs to span between supports and mechanically fasten.

J. Miscellaneous Roof-Deck Accessories: Install ridge and valley plates, finish strips, end closures, and reinforcing channels according to deck manufacturer's written instructions. mechanically fasten to substrate to provide a complete deck installation.

1. Weld cover plates at changes in direction of roof-deck panels, unless otherwise indicated.

K. Pour Stops and Girder Fillers: Weld steel sheet pour stops and girder fillers to supporting structure according to SDI recommendations, unless otherwise indicated.

L. Floor-Deck Closures: Weld steel sheet column closures, cell closures, and Z-closures to deck, according to SDI recommendations, to provide tight-fitting closures at open ends of ribs and sides of deck.

3.2 FIELD QUALITY CONTROL

A. Testing Agency: Owner will engage a qualified independent testing and inspecting agency to perform field tests and inspections and prepare test reports.

B. Field welds will be subject to inspection.

C. Testing agency will report inspection results promptly and in writing to Contractor and Architect.

D. Remove and replace work that does not comply with specified requirements.

E. Additional inspecting, at Contractor's expense, will be performed to determine compliance of corrected work with specified requirements.

3.3 REPAIRS

A. Galvanizing Repairs: Prepare and repair damaged galvanized coatings on both surfaces of deck with galvanized repair paint according to ASTM A 780 and manufacturer's written instructions.

B. Repair Painting: Wire brush and clean rust spots, welds, and abraded areas on both surfaces of prime-painted deck immediately after installation, and apply repair paint.

END OF SECTION 053100

SECTION 05500
METAL FABRICATIONS

PART 1 GENERAL

1.01 SECTION INCLUDES

A. Shop fabricated custom metal items.

1.02 DESIGN REQUIREMENTS

B. Design requirement for stairs, ladders, landings, platforms, handrails and guardrails shall comply with ASCE 7 and building code requirements.

C. Handrails shall be designed and constructed for a concentrated load of 200 lbs. applied at any point and in any direction and for a uniform load of 50 lbs/ft applied in any direction. Uniform and concentrated loads shall not be applied simultaneously.

D. Guardrails shall be designed and constructed for a concentrated load of 200 lbs. applied at any point and in any direction along the top rail and for a uniform load of 50 lbs/ft applied horizontally at required guard height and a simultaneous uniform load of 100 lbs/ft applied vertically downward at the top of the guard. Uniform and concentrated loads shall not be applied simultaneously.

E. Handrails and stair design and materials shall comply with the requirements of applicable building codes, and ADA.

1.03 RELATED SECTIONS

A. Section 05100 Structural Metal Framing: Rolled structural metal framing.

1.04 SUBMITTALS

A. Submit metal fabrication shop drawings under provisions of the General Requirements.

1.05 PROJECT RECORD DOCUMENTS

A. Maintain and submit project record documents for any change or deviation from submitted shop drawings under provisions of the General Requirements.

PART 2 PRODUCTS

2.01 MATERIALS

A. Channels, Angles and Plates: ASTM A36, plain and ASTM A153 class B2 galvanized.

B. Hollow Structural Shapes: ASTM A500 grade B, plain and ASTM A153 class B2 galvanized.

C. Sheet: ASTM A569, plain and ASTM A153 class B2 galvanized.

D. Grating: Grip Strut plank grating, galvanized steel, gage and depth as required for load requirements manufactured by McNichols Co. (800) 237-3820.

E. Ladder rungs: 14 gage galvanized Grip Strut ladder rungs manufactured by McNichols Co. (800) 237-3820

F. Cast-in stair nosing: 4" x stair width, aluminum with abrasive filler for casting into concrete, cast-in wing anchoring, color as selected by Architect

1. Type 101 Nosing, Brown-Campbell Company, 1383 S. Woodward Avenue Bloomfield Hills, MI 48302, (800) 472-8464
2. 3701 by American Safety Tread, P.O. Box 611, Helena, AL 35080

2.02 FASTENING

A. Bolts, Nuts, and Washers: ASTM A325, plain and ASTM A153 class B2 galvanized.

B. Welds: AWS D1.1.

C. Concrete and grouted masonry expansion bolts: HILTI KWIK Bolt II or equal.

2.03 FABRICATION

A. Fit and shop assemble in largest practical sections, for delivery to site.

B. Fabricate items with joints tightly fitted and secured, seal joined members by continuous welds.

C. Grind joints flush and smooth with adjacent finish surface. Make joints butt tight, flush, and hairline. Ease edges to small uniform radius.

D. Exposed Mechanical Fastenings: Flush countersunk screws or bolts; unobtrusively located; consistent with design of component.

E. Supply components required for anchorage. Fabricate anchors and related components of same material and finish as fabrication.

F. Drill and thread holes for gate hardware attachment. Drill gate strike jamb railing as require for hardware wiring.

2.04 FINISH

A. Prime Paint: Steel Structures Painting Council Specification 15-68T, type I (red oxide), minimum 1.5 mil dry film.

B. Provide galvanized steel for all fabrications that will be exposed to weather.

C. Do not prime metal intended to bond with concrete.

D. Non-slip abrasive coating: Diamond Grip, Superior Industries, 6180 Airways Blvd, Chattanooga, TN 37421, (800) 476-2072

PART 3 EXECUTION

3.01 COORDINATION

A. Coordinate work of this Section with work Section 03300 and 04220 for anchors, and sleeves to be cast in concrete or built into masonry.

3.02 PREPARATION

A. Verify that field condition is acceptable and are ready to receive work.

B. Clean and strip primed steel items to bare metal where site welding is required.

3.03 INSTALLATION

A. Install items plumb and level, accurately fitted, free from distortion or defects.

B. Field weld components indicated on shop drawings. Perform field welding in accordance with AWS D1.1.

C. After installation prime welds, abrasions, and surfaces not shop primed.

3.04 ERECTION TOLERANCES

A. Maximum Variation From Plumb: 1/4 inch.

B. Maximum Offset From True Alignment: 1/4 inch.

END OF SECTION

SECTION 05800
EXPANSION CONTROL

PART 1 GENERAL

1.06 SECTION INCLUDES

C. Expansion Joint Cover Assemblies

D. Fire-rated Joint Covers

1.07 RELATED SECTIONS

A. Section 07700 Roofing Specialties and Accessories

B. Section 07900 Joint Sealers

PART 2 PRODUCTS

2.05 EXPANSION JOINTS MANUFACTURERS

A. Balco/Metalines Inc., P.O. Box 17249, 2626 South Sheridan, Wichita, Kansas 67217, (800) 767-0082.

B. MM Systems Corp., 4520 Elmdale Drive, Tucker, GA 30085, (404)938-7570

2.06 EXPANSION JOINTS

A. Size expansion joint covers for conditions.

B. Exterior expansion joint covers:

3. Roof: Type EJ by Balco/Metalines Inc., Series ERJL by MM Systems Corp

C. Interior expansion joint covers: tamper resistant fastener attached.

4. Wall: WD and WDC series by Balco/Metalines Inc.
5. Ceiling/Wall: AC-25 series by Balco/Metalines Inc.

D. Fire-rated joint covers

1. Wall joint: Metaflex fire barrier, M-20000, design for 3 hour barrier with WDC-2 joint cover as manufactured by Balco/Metalines Inc.
2. Floor joint: Metaflex fire barrier, M-20000, design for 3 hour barrier with type 75FCE-2, 75FVCE-2 and 75 FPE-2 joints cover as manufactured by Balco/Metalines Inc.

PART 3 EXECUTION

3.05 INSTALLATION

A. Coordinate with work of Masonry and Roofing for joint requirements.

B. Install expansion joint covers in accordance with manufacturer's instructions.

C. Insure joints are properly installed and sealed.

D. Provide tamper-resistant fasteners attached metal covers at inmate accessible areas.

END OF SECTION

SECTION 06100
ROUGH CARPENTRY

PART 1 GENERAL

1.01 SECTION INCLUDES

A. Lumber

B. Sheathing

C. Wood Treatment

1.02 REFERENCES

A. BOCA National Building Code / 1996 Table 2305.2 Fastening Schedule.

1.03 SHOP DRAWINGS

A. Submit shop drawings and product date for deck framing. Indicate type of lumber and lumber sizes; indicate hangers and fastening methods. Coordinate framing for railing requirements.

B. Submit shop drawings and product data for decking and railings. Indicate materials and sizes for the deck and products used in the railing system.

PART 2 PRODUCTS

2.01 MATERIALS

C. Dimension Lumber: grade stamped by agency certified by the Board of Review of the American Lumber Standards Committee (ALS), kiln-dried to 19 percent moisture content, planed 4 sides, eased edges.

D. Sheathing: APA rated.

1. Plywood: sheathing grade; span rating 32/16; exposure class type I; CDX.
2. Oriented Strand Board: sheathing grade; span rating 32/16; exposure class type I.

E. Preservative Treated Lumber and plywood: AWPA C2-lumber and C9-plywood pressure treated; chromated copper arsenate (CCA) Type C; to the following minimum net retention of 0.25.

F. Fire Retardant Treated Lumber: AWPA pressure treated lumber and plywood, using one of the following treatments:

1. DRICON fire retardant wood treatment as manufactured by Hickson Corporation, 1100 Johnson Ferry Rd., Atlanta, GA 30342, (404) 843-3235.
2. D-Blaze fire retardant wood treatment as manufactured by Chemical Specialties, Inc., One Woodlawn Green, Suite 250, Charlotte, North Carolina 28217, (704) 522-0825.

G. Fasteners: Hot-dipped galvanized steel for exterior, high humidity, and treated wood locations; plain finish elsewhere; size and type to suit condition in accordance with BOCA Basic National Building Code 1996 Table 2305.2 Fastening Schedule.

H. Anchors: Toggle bolt type for anchorage to hollow masonry. Expansion shield and lag bolt type for anchorage to solid masonry or concrete. Bolts or ballistic fasteners for anchorage to steel.

PART 3 EXECUTION

3.01 INSTALLATION

A. Coordinate with work of other Sections for blocking and nailer requirements.

B. Erect wood nailers and blocking and framing true to lines and levels.

C. Construct members of continuous pieces of longest possible lengths.

D. Provide fire-resistant wood for interior blocking and nailers.

E. Construct locker bases using non-combustible lumber. Coordinate with locker manufacturer for required height of base for standard and for barrier free lockers.

3.02 DECK INSTALLATION

A. Verify structural framing design complies with requirements of decking manufacturer.

B. Install framing in accordance with drawings, shop drawings and manufacturer's requirements.

C. Paint top of joists black prior to installing decking.

D. Install decking and railing system in accordance with manufacturer's instruction. Coordinate for proper installation of railing supports, decking and railing.

END OF SECTION

SECTION 06400
ARCHITECTURAL WOODWORK

PART 1 GENERAL

1.01 SECTION INCLUDES

A. Wood fabricated casework

B. Wood fabricated counter and workstations

C. Hardwood veneer plywood panels

1.02 REFERENCES

A. ADA Accessibility Guidelines for Buildings and Facilities.

PART 2 PRODUCTS

2.01 WOOD FABRICATIONS MATERIALS

A. Materials

1. Particleboard: ANSI A208.1 mat-formed particleboard, water resistant, minimum 45 lbs. per cubic foot density, Microfine Novoply by Georgia-Pacific.
2. Plastic Laminate: NEMA general purpose grade
   a. General purpose, horizontal: HGF, .050 inch
   b. General purpose, vertical: VGF, .039 inch
   c. Post forming, horizontal, formed radius edge: HGP, .039 inch
   d. Backing sheet: BKL, .020 inch
   e. Melamine panels: thermally-fused panels with thermoset melamine resin impregnated paper pressure bonded to both sides of industrial grade particleboard.
   f. Manufacturers
      1. Wilsonart, Ralph Wilson Plastics Co., 600 S. General Bruce Dr., P.O. Box6110, Temple, TX 76503-6110, (800) 433-3222 – Color - Windsor Mahogany 7039, Finish 78 (Upper and Lower Cabinets).
   g. Edge banding – Doors/Drawers: Plastic laminate matching exposed surface.
   h. Edge Banding – Countertops: Hardwood – Cherry to match hardwood veneer.
3. Hardwood Veneer Plywood Panels
   a. Veneer: Cherry
   b. Factory laminate hardwood veneer. Contractor shall submit samples.
   c. Hardwood panels shall be sequence and book matched.
   d. Finish: Field applied polyurethane. Refer to section 09900.
   e. Plywood backing: ¾ inch, 4 ply plywood.
   f. Edge banding: Field applied edge banding to conceal all exposed edges. Material shall match face surface material.
   g. Reveal material: Plastic laminate covered particleboard – ½” h. x 3/8” d.
4. Hardwood
   a. Nominal 1 x solid plain sliced red oak.
   b. Finish: Field applied polyurethane. Refer to section 09900.

B. Counter top construction

1. Exposed surfacing material: plastic laminate
2. Substrate: phenolic resin particleboard, nominal thickness 1 inch, with backing sheet
3. Panels: particleboard, nominal thickness 3/4 inch, laminate covered
4. Support tops three sides minimum, for counters over 4 feet long provide intermediate support brackets so that no span exceeds 3 feet in length
5. Fabrication: finish in field, scribe substrate and laminate to adjacent materials. Seal bottom edge of back and side splashes to surface of counter, seal top edge to wall

C. Cabinet construction

1. Style: flush overlay, doors and fixed panels overlaying and concealing frames and sides of cabinet body.
2. Joinery: biscuit and glued, dowel and glued, rabbet and glued, screw and glued.
3. Components:
   a. Doors: 3/4 inch thick melamine, plastic laminate exposed side
   b. Drawer front: 3/4 inch thick melamine, plastic laminate exposed side
   c. Panels: 3/4 inch thick melamine, plastic laminate exposed side
   d. Sides and stretchers: 3/4 inch thick white melamine
   e. Back panels: white melamine panel
   f. Toe kicks: 3/4 inch thick particleboard
   g. Drawer box: 1/2 inch thick white melamine sides, ends, and bottom, doweled and glued, dadoed for bottom
   h. Edging: doors, drawer fronts, and cabinet case edged with plastic laminate
   i. Interior shelving: 3/4-inch thick white melamine.
   j. Exterior shelving: 3/4-inch particleboard, plastic laminate both sides

2.02 CABINET HARDWARE

A. Wire pulls: FE14896-26D manufactured by Baer Supply Company, (800) 289-2237.

B. Hinges: Snap-On 3000 Series manufactured by Grass

C. Hanging system: rail and claw system, adjustable unit hanger manufactured by Camar

D. Drawer slides: ball bearing slides, full extension 75 lb capacity

E. Locks: #987 NP as manufactured by Knape & Vogt Mfg. Co., 2700 Oak Industrial Dr. S.E., Grand Rapids, MI 49505 (800) 253-1561

F. Shelf clips: hole mounted, locking nylon sized for shelf

G. Recessed pulls: WP-35 bright chrome as manufactured by EPCO Co., P.O. Box 108, Flint, MI 48501, (313) 767-2050

2.03 COUNTER HARDWARE

A. Joint fasteners: 513 ZC as manufactured by Knape & Vogt Mfg. Co., 2700 Oak Industrial Dr. E., Grand Rapids, MI 49505 (800) 253-1561

B. Grommets: coordinate size, shape and quantity with Owners equipment requirements manufactured by Häfele

C. Support bracket: Ultimate L-Bracket as manufactured by Knape & Vogt Mfg. Co., 2700 Oak Industrial Dr. E., Grand Rapids, MI 49505 (800) 253-1561.

2.04 ADJUSTABLE SHELVING

A. Cantilever Shelving Hardware: 80 Standards and 180 Brackets color as selected by Architect. One bracket for each 12 inches of standard. Standards equally spaced not more than 36 inches on center. Standards lengths 6 feet for full wall adjustable shelves, 3 feet above counters or as shown on Drawings.

B. Shelving: 3/4 inch thick particleboard, softwood edge banding, enamel painted.

2.05 GATE HARDWARE

A. Self closing mortise pivots - Bommer Industries, 7000 series.

PART 3 EXECUTION

3.01 PREPARATION

A. Field verify all dimensions prior to fabrication of custom cabinets or counters.

B. Verify that mechanical and electrical rough in are in place and that work of surrounding area is ready to receive work of this Section.

C. Coordinate with other trades for requirements of products to be installed in work of this Section.

D. Protect adjacent work from damage by work of this Section.

3.02 INSTALLATION

A. Shop and site fabricate components as required. Provide cutouts as required for products of other trades. Provide grommets for exposed cutouts.

B. Install items as indicated on Drawings where hardware permits use concealed fastening method. Secure to walls with screws embedded one-inch minimum in solid wood framing or blocking.

C. Install plumb and level with all joints tight.

D. Shim work as required and trim with molding to match.

E. Install items tight to walls, scribe units to wall as necessary.

F. Install miscellaneous hardware and accessories.

3.03 CLEANING AND ADJUSTMENT

A. Clean work and surrounding area of dirt and debris.

B. Remove packing materials.

C. Remove installation markings from all surfaces

D. Adjust all doors, shelves and drawers to operate freely and align square and plumb with cabinets.

END OF SECTION

SECTION 07200
INSULATION

PART 1 GENERAL

1.01 SECTION INCLUDES

A. Thermal Insulation

1.02 RELATED SECTIONS

A. Section 07500 Membrane Roofing: roof insulation board.

PART 2 PRODUCTS

2.01 BUILDING INSULATION

A. Rigid Insulation: rigid extruded polystyrene, ASTM C578 type IV, thickness as shown on drawings, 16 or 24 (for installation condition) x 96 inch, square edge boards

PART 3 EXECUTION

3.01 INSTALLATION - DOUBLE WYTHE MASONRY WALL CAVITY

A. Install insulation over masonry backup wall prior to installing veneer.

B. Apply adhesive in 3 inch ribbons, 12 to 16 inch on center for entire board length. Ribbons shall be 3/16" thick.

C. Adhere boards to back-up wall. Coordinate with horizontal joint reinforcing.

D. Place boards in a method to maximize contact bedding. Butt edges and ends tight to adjacent board and to protrusions

3.02 INSTALLATION – PERIMETER

A. Install boards over foundation wall. Fit insulation tight to wall and adjoining elements

B. Install perimeter insulation on inside of foundation wall from top of footing to underside of floor slab.

C. Apply adhesive in 3 inch ribbons, 12 to 16 inch on center for entire board length. Ribbons shall be 3/16" thick

D. Place boards in a method to maximize contact bedding. Butt edges and ends tight to adjacent board and to protrusions

END OF SECTION

SECTION 07240
EXTERIOR INSULATION AND FINISH SYSTEM

PART 1 GENERAL

1.01 WORK INCLUDED

E. Exterior finish system materials for exterior masonry wall covering

1.02 QUALITY ASSURANCE

A. Applicator: Shall be trained in application of the Product and shall be acceptable to product supplier.

B. System Selection: System selected shall be of manufacturer approved type and application methods for substrates and substrate conditions.

1.03 SUBMITTALS

A. Submit color chart for color selection

B. Submit product information for texture selection

C. Submit 12” x 12” samples for approval of color and texture. Two samples will be retained by Architect submit additional quantity as contractors require

1.04 WARRANTY

A. Provide a fifteen (15) year manufacturer’s warranty on materials.

1.05 DELIVERY, STORAGE, AND HANDLING

A. Deliver products to site in manufacturer's original sealed and labeled containers; inspect to verify acceptance.

B. Store materials at minimum ambient temperature of 40 degrees F and a maximum of 110 degrees F in well ventilated area, unless required otherwise by manufacturer's instructions.

C. Protect material from weather, direct sunlight, surface contamination and damage from construction traffic or processes.

1.06 ENVIRONMENTAL REQUIREMENTS

A. Maintain surface and ambient temperatures above 40 degrees F for 24 hours before, during, and 24 hours after application of finish, unless required otherwise by manufacturer's instructions.

B. Do not apply during inclement weather unless appropriate protection is employed.

PART 2 PRODUCTS

2.01 MATERIALS

A. Products of EIFS system shall be manufactured by or approved for use by a single manufacturer issuing warranty for the entire system. Specifications are based on Sto Corp., StoTherm Lotusan NExT.
   1. Air/Moisture Barrier: StoGuard Gold Coat fluid applied air/moisture barrier.
   2. Adhesive: Sto BTS Plus – polymer-modified, cement base high build adhesive.
   3. Insulation Board: nominal 1.0 lb/ft³ expanded polystyrene insulation board – ASTM C 578 Type I requirements, and EIMA guidline specification for expanded polystyrene insulation board – minimum thickness – 4''.
   4. Base Coat: Sto BTS Plus – one component, polymer-modified, cement base high build base coat with less than 33% Portland cement content by weight and capable of achieving minimum 1/16 inch thickness in a single pass.
   5. Reinforcing mesh: nominal 11 ounce/sq. yd double stand, interwoven, open-weave glass fiber fabric with alkaline resistant coating.
   6. Finish Coat: Stolit Lotusan, acrylic based textured wall coating with graded marble aggregate and Optilink advanced polymer technology.

2.02 MANUFACTURERS

A. Sto Industries, 3800 Camp Creek Pkwy, Building 1400, Suite 120, Atlanta, Georgia 30331, (800) 221-2397.

B. Other manufacturers meeting requirements listed above. Refer to Section 01600 (1.08)

PART 3 EXECUTION

3.01 PREPARATION

A. Examine existing substrate and consult product representative as required for approval of construction.

B. Examine drawings to coordinate installation of correct thickness insulation at indicated locations.

C. Power wash entire brick veneer surface prior to beginning installation.

D. Fill major voids and replace missing brick prior to installation.

3.02 INSTALLATION

A. Install system in accordance with manufacturer's instructions.

B. Mix and prepare base system when required as recommended by manufacturer. Mix in quantities restricted for application time as recommended by the manufacturer.

C. Apply base coat and fiberglass mesh over insulation using detail and standard mesh as recommended by manufacturer.

D. Plane off and finish smooth with trowel.

E. Finish Coat shall be mixed as required and applied as recommended by the manufacturer. Maintain a wet edge during application. Apply finish in thickness recommended by manufacturer and to the finish texture of approved sample.

END OF SECTION

SECTION 07250
SPRAY APPLIED INSULATION

PART 1 GENERAL

1.01 SECTION INCLUDES

A. Spray-on insulation

1.02 RELATED SECTION

A. Structural steel for deck and streel framing.

1.03 SUBMITTALS

A. Submit product data under provisions of the General Requirements

B. Submit product data for materials and material test results showing compliance with required fire rated designs.

C. Submit a schedule of designs for various fireproofed components as required by code.

1.04 QUALITY ASSURANCE

A. Perform work in accordance with manufacturer' instructions.

B. Maintain one copy of each document on site.

1.05 QUALIFICATIONS

A. Manufacturer: Company specializing in the manufacture of products specified in this Section with minimum three years experience.

B. Applicator: Company specializing in applying the work of this Section approved by manufacturer.

1.06 DELIVERY, STORAGE, AND HANDLING

A. Deliver products to site under the General Requirements.

B. Store and protect products under the General Requirements.

1.07 SEQUENCING AND SCHEDULING

A. Coordinate work under the provisions of the General Requirements.

B. Coordinate application of spray-on fireproofing with masonry and hollow metal work.

PART 2 PRODUCTS

2.03 SPRAY-ON INSULATION

A. Celbar Spray-on Systems as manufactured by International Cellulose Corporation,

B. R-Value: Achieve minimum R-Value of 9.5

C. Fire Rating: as shown on the drawings.

PART 3 EXECUTION

3.03 EXAMINATION

A. Verify that surfaces, openings, piping and hangers are ready to receive work.

B. Provide all work and materials required to achieve ratings as indicated in the drawings.

3.04 PREPARATION

A. Clean areas free of dirt, loose scale and oil

3.05 CLEANING

A. Clean work under provisions of the General Requirements.

B. Clean over spray or excess material that will affect work of other sections or buildings finished appearance from floor slabs, walls and other surfaces.

END OF SECTION

SECTION 07500
MEMBRANE ROOFING

PART 1 GENERAL

1.01 SECTION INCLUDES

A. Standard fully adhered single ply membrane roofing system

B. Roof insulation

C. Flashing and trim

1.02 RELATED SECTIONS

A. Section 07700 Roof Specialties and Accessories.

1.03 DESIGN REQUIREMENTS

A. Roof and tapered insulation thickness to achieve a roof average aged R-value not less than R-24. Isocyanurate insulation shall be considered to have a maximum R-value of 6 per inch for calculation of insulation thickness.

B. Tapered roof insulation shall be provided to achieve continuous slope of 1/4 inch per foot to roof drains.

C. Insulation must meet applicable code requirements for fire performance or be separated from interior with thermal barrier.

1.04 QUALITY ASSURANCE

A. Primary manufacturer only shall provide products of this section. Secondary marketing firms are not approved.

B. Roofing applicator shall be certified in writing by roofing manufacturer as a licensed applicator and be a manufacturer’s Red Shield Contractor.

C. A single installer shall perform the work of this Section.

D. Inspections and field service shall be provided by manufacturer as required for warranty

1.05 DELIVERY, STORAGE AND HANDLING

A. Deliver products in original containers as labeled by the manufacturer and store and protect in accordance with the manufacturer's requirements prior to and during installation.

B. Materials that have been damaged to the point that they will not perform as required for the manufacturer's warranty shall not be used.

1.06 COORDINATION

A. Coordinate materials required for manufacturer's standard details. Drawings indicate intent of design however the manufacturer's recommended details and practices as required for the warranty shall dictate materials and work requirements.

B. Provide all materials required for roofing system as required by manufacturer's details.

1.07 WARRANTY

A. Provide ten (10) year total system warranty. Coverage shall include insulation, screws, plates, membrane and edge metals.

B. Provide twenty (20) year membrane warranty. Coverage shall include membrane and workmanship from failure to resist leaking.

C. All materials used for roof system shall be supplied or approved by and shall be warranted by roof membrane manufacturer and installer.

PART 2 PRODUCTS

2.01 ROOFING MEMBRANE

A. Manufacturer: Firestone Building Products Company, 525 Congressional Blvd., Carmel, IN 46032, (800) 428-4511.

B. Other Manufacturers

1. Johns Manville Roofing System Group, 717 17th Street, Denver, CO 80202, (800) 654-3103
2. Carlisle SynTec Incorporated, P.O. Box 7000, Carlisle, PA 17013, (800) 479-6832
3. Versigard Incorporated, 3485 Fortuna Drive, Akron, OH 44312 (800) 992-7663
4. GAF Materials Corporation, 1361 Alps Road, Wayne, NJ 07470, (800) 766-3411

C. Membrane: EPDM 60 mil; Non-Reinforced Rubbergard, black, Class B or better

2.02 ROOFING MATERIALS

A. Insulation:

1. Board: 4" ISO 95+ (GL) 2 layers of 2"
2. Taper: ISO 95+ tapered insulation 1/4" per foot

B. Flexible roof flashing: Membrane flashing approved by roofing manufacturer.

C. Sheet metal copings and counter flashing: .040 inch aluminum, FM I-90 approved, Kynar finish color as selected by Architect from full range of possible colors.

D. Fasteners:

1. Fastener: Concrete drive fastener, length to penetrate deck minimum of 1 1/4"
2. Plates and battens: as recommended by roofing Manufacturer for system
3. Hot mopped asphalt: as recommended by roofing manufacturer and compatible with other materials.

E. Seam tape and primer: Firestone Quickseam tape and QuickPrimer.

F. Sealants, boots and adhesives: Roofing manufacturer standard.

2.03 ACCESSORIES

A. Wood nailers: kiln dried structural grade #2 or better Southern Pine, Douglas Fir or Larch, pressure treated for rot resistance.

B. Adhesives: manufacturer's recommended bonding adhesives.

C. Fascia sumps: same material and finish as flashing

D. Roof walk pads: 30” x 30” x 0.30” compatible with membrane

E. Scupper: preformed from same material as copings and flashings

F. Downspouts: 3 x 4 inches rectangular profile; shop formed, 0.024 inch aluminum; shop coated with Kynar 500, color to match gutters

PART 3 EXECUTION

3.01 INSPECTION

A. Verify insulation is clean, smooth, dry and free of depressions, waves, or projections and properly sloped to drains or eaves and properly secured.

B. Verify roof openings and penetrating elements through roof are solidly set. Verify deck is supported and secured.

C. Do not apply roofing materials to damp, frozen, dirty, dusty, or deck surfaces unacceptable to manufacturer.

D. Verify deck surfaces are dry and free of snow or ice. Confirm dry deck by moisture meter with 12 percent moisture maximum.

E. Arrange with manufacturer's representative for required inspections to assure warranties.

3.02 INSULATION INSTALLATION

A. Verify all products to be used are acceptable to roof membrane manufacturer. Correct material selections not satisfactory to roofing manufacturer.

B. Install all products using manufacturer's standard details and procedures, consult manufacturer's representative for specific conditions.

C. Lay insulation as required for system within membrane manufacturer's tolerances.

D. Fasten to meet code and roofing manufacturer requirements. Use pattern recommended by manufacturer, minimum of one fastener per 2 square feet or hot mop asphalt adhere insulation as permitted and in manner recommended by roofing manufacturer.

E. When multiple layers of insulation are required rotate layers 90 degrees to each other and stagger joints.

F. Install only the amount of insulation in a day that can be covered by membrane in the same day.

3.03 MEMBRANE PREPARATION

A. Loosely lay sheet membrane over insulation and allow membrane to relax 30 minutes minimum before bonding, splicing or attaching.

3.04 MEMBRANE INSTALLATION

A. Install membrane roofing in accordance with membrane manufacturer's current printed instructions.

B. Fold membrane back to expose underside, sheet fold should be smooth and wrinkle free.

C. Sweep surfaces and membrane free of dust and dirt.

D. Apply adhesive at rate and using method as recommended by manufacturer stop bonding adhesive short of splice areas.

E. Allow adhesive to flash off and test for readiness.

F. Bond membrane to substrate slowly and evenly minimize wrinkling and bubbling.

G. Broom membrane with stiff bristle push broom to ensure proper contact.

H. Overlap edges and ends minimum 3 inches and seal as instructed by manufacturer. Apply additional 5” cover strip of QuickSeam flashing

I. Shingle joints on sloped substrate in direction of drainage. Apply joint tape and seal.

J. Seal to adjoining surfaces.

K. Continue membrane up vertical surfaces minimum 6 inches unless otherwise noted.

L. Seal items penetrating membrane with counter-flashing membrane material.

M. Install flashing and cants in accordance with manufacturer's standard details. Seal watertight to membrane.

N. Reinforce membrane with multiple thickness of membrane material over joints, whether joints are static or moving.

O. Adhere membrane to substrate as required by membrane manufacturer for system.

3.05 INSTALLATION WALKWAY PADS

A. Layout and route walkway pads maintaining minimum of 10 feet from roof edge except where guard rails are provided or as required for access route.

B. Install walkway pads at all access points, around mechanical equipment requiring regular maintenance, routes between the above and any area subject to traffic more frequently than once a month.

C. Install spaced a minimum of 1” and maximum of 6” edge to edge

D. Adhere walkway pads to roofing membrane as directed by roofing manufacturer.

3.06 PROTECTION

A. Protect finished installation. After installation, close off area to prevent unauthorized traffic.

END OF SECTION

SECTION 07700
ROOF SPECIALTIES AND ACCESSORIES

PART 1 GENERAL

1.08 SECTION INCLUDES

A. Vented Soffit

PART 2 PRODUCTS

2.04 VENTED SOFFIT

B. Vented Soffit: PAC-750 Soffit (full vent), .032 aluminum, with matching perimeter J channel as manufactured by Petersen Aluminum Corp., 1005 Toone Road, Elk Grove Village, IL 60007, (708) 228-7150

C. Color: as selected and approved by Architect

PART 3 EXECUTION

3.07 INSTALLATION

D. Install in accordance with manufacturer's instructions. Coordinate with installation of system.

END OF SECTION

SECTION 07□00
□OINT SEALERS

PART 1 GENERAL

1.01 SECTION INCLUDES

A. Sealants and Caulking

1.02 RELATED SECTIONS

A. 07240 Exterior Insulation Finish System: perimeter sealants and details

B. Section 07250 Fireproofing

1.03 SUBMITTALS

A. Submit color samples for all sealant and fillers for selection.

1.04 COORDINATION

A. Review room finishes schedule and finish plans for areas requiring security sealant at floor finish to wall joints

PART 2 PRODUCTS

2.01 SEALANTS AND CAULKING

A. Exterior sealant: Dymeric 511 as manufactured by Tremco, Inc., 3735 Green Rd., Beachwood, OH 44122, (800) 321-7906.

B. Interior sealant: AC-20 +Silicone manufactured by Pecora Corporation, 165 Wambold Road, Harleyville, PA 19438, (800) 523-6688.

C. Security sealant: DynaFlex SC as manufactured by Pecora Corporation, 165 Wambold road, Harleyville, PA 19438, (800) 523-6688

2.02 JOINT FILLER

A. Exterior Joint Filler: Colorseal, match adjacent material color manufactured by Emseal Joint Systems, Ltd., 108 Milk Street, Westborough, MA 01581, (508) 836-0280.

PART 3 EXECUTION

3.01 EXAMINATION

A. Verify that surfaces are ready to receive work and field measurements are as shown on Drawings and recommended by the manufacturer.

B. Beginning of installation means installer accepts existing surfaces.

3.02 PREPARATION

A. Clean and prime joints in accordance with manufacturer's instructions.

B. Remove loose materials and foreign matter that might impair adhesion of sealant.

C. Verify that joint backing and release tapes are compatible with sealant.

D. Perform preparation in accordance with manufacturer's instructions for all sealants.

E. Protect elements surrounding the work of this Section from damage or disfigurement.

3.03 INSTALLATION

A. Provide security sealant at all locations indicated as inmate accessible.

B. Seal control and construction joints, joints between dissimilar materials, equipment and fixtures with security sealant at all areas within security perimeter.

C. Install sealant in accordance with manufacturer's instructions.

D. Measure joint dimensions and size materials to achieve required width/depth ratios.

E. Install joint backing to achieve a neck dimension no greater than 1/2 the joint width.

F. Install bond breaker where joint backing is not used.

G. Apply sealant within recommended application temperature ranges. Consult manufacturer when sealant cannot be applied within these temperature ranges.

H. Install sealant free of air pockets, foreign embedded matter, ridges, and sags.

I. Tool joints concave. At exterior masonry control joints tool sealant to match mortar joints.

J. Compress rigid extrusion sealer prior to installation.

3.04 CLEANING AND REPAIRING

A. Clean work under provisions of the General Requirements.

B. Clean adjacent soiled surfaces.

C. Repair or replace defaced or disfigured finishes caused by work of this Section.

3.05 PROTECTION OF FINISHED WORK

A. Protect finished installation under provisions of the General Requirements.

B. Protect sealant until cured.

End of Section

SECTION 08100
METAL DOORS AND METAL FRAMES

PART 1 GENERAL

1.01 SECTION INCLUDES

A. Standard Steel Doors and Frames

B. Interior Barrow Light Frames

C. Ballistic Doors and Frames

D. Ballistic Window Frames

1.02 RELATED SECTIONS

A. Section 08200 Wood Doors

B. Section 08700 Door Hardware

C. Section 08800 Glass and Glazing

1.03 COORDINATION

A. Coordinate with masonry contractor for installation of frames.

B. Coordinate with wood door manufacturer, door hardware supplier and glazier.

1.04 REGULATORY REQUIREMENTS

A. Conform to applicable code for fire rated frames and doors. Provide doors that comply with requirements for labels as indicated on drawings.

B. Label shall be affixed to jamb of door and frame indicating door rating.

C. Label ballistic steel doors

1.05 SUBMITTALS

A. Submit door and frame elevation and schedule shop drawings and product data.

B. Submit door and frame shop drawings with shop drawings and product information for all glass and hardware products associated with doors and frames.

PART 2 PRODUCTS

2.01 STEEL DOORS AND FRAMES

A. Standard Steel Doors and Frames: comply with HMMA 861 - Specifications for Commercial Hollow Metal Doors and Frames, with door face and frame gages as modified in the door schedule.

B. Interior Barrow Light Frames: comply with HMMA 861 - Specifications for Commercial Hollow Metal Doors and Frames, with door face and frame gages as modified in the door schedule.

C. Ballistic Steel Doors and Frames: bullet resistant door, frame, hardware and accessories assembly complying with requirements of UL 752 for level IV

D. Ballistic Window Frames: bullet resistant door, frame, hardware and accessories assembly complying with requirements of UL 752 for level IV

2.02 STEEL DOOR AND FRAME FABRICATION

A. Fabricate doors and frames as a welded unit. Fabricate doors and frames to style as indicated in drawings.

B. Fabricate exterior doors with channel web out for flush closer top of door.

C. Prepare frame for silencers. Provide three single rubber silencers for single doors on strike side, and two single silencers on frame head at double doors.

D. Fabricate doors with 5/8" undercut standard or 3/8" for doors with thresholds.

E. Fabricate frames with mortar boxes welded to frame at back of hardware cutouts to accommodate hardware installation.

F. Provide junction boxes and conduit connecting boxes within frame, provide for conduit connections to boxes on frames as required for powered hardware.

G. Attach fire rated label to each fire rated door and frame unit.

H. Provide loose "T", welded strap or adjustable loop type anchors for masonry installations, welded metal strap for stud wall installation or thru bolt with tube spacer for existing wall installations.

2.03 ACCESSORIES

A. Slide hardware: Ezy-Roll Aluminum Track P1092 ANOD manufactured by Knape & Vogt, 2700 Oak Industrial Drive NE, Grand Rapids, MI 49505, (616) 459-7620

B. Lock: Rachet Lock 963 CHR manufactured by Knape & Vogt, 2700 Oak Industrial Drive NE, Grand Rapids, MI 49505, (616) 459-7620

C. Handle: Finger pull GP-15A clear anodized, press fit 2 3/4” for 1/4” glass door manufactured by EPCO Co., P.O. Box 108, Flint, MI 48501, (313) 767-2050

2.04 STEEL DOOR AND FRAME FINISHES

A. Interior Units: Shop primed coordinate primer with finish painting.

B. Exterior Units: 0.60 oz/ sq ft galvanized prior to fabrication, shop prime.

C. Finish: Field paint as specified in Section 09900 Painting.

PART 3 EXECUTION

3.01 COORDINATION

A. Section 08700 Hardware for installation requirements.

B. Section 08800 Glass and Glazing for installation requirements.

3.02 PREPARATION

A. Protect inside throat of each frame that will be grouted solid with a waterproof undercoating material minimum 1/8" thick.

3.03 INSTALLATION

A. Install in accordance with manufacturer's instructions and reviewed shop drawings

B. Install in correct location, level, square and plumb, and in alignment with other work

C. Provide three anchors minimum per jamb. Frames in masonry shall be filled with grout.

D. All joints between frames and building structure shall be sealed in order to secure a watertight installation.

3.04 TOLERANCES

A. Maximum Diagonal Distortion: 1/16 inch measured with straight edge, corner to corner.

3.05 ADJUSTING

A. Adjust hardware for smooth and balanced door movement

3.06 PROTECTION AND CLEANING

A. Protect exposed portions of aluminum and painted surfaces from damage.

B. Clean glass and frames prior to turning building over to Owner.

END OF SECTION

SECTION 08200
WOOD DOORS

PART 1 GENERAL

1.01 SECTION INCLUDES

A. Wood Doors.

1.02 RELATED SECTIONS

A. Section 08100 Metal Doors and Frames

B. Section 08700 Door Hardware

C. Section 08800 Glass and Glazing

1.03 COORDINATION

A. Doors of this Section are scheduled in Section 08100 coordinate work with manufacture of frames and requirements of hardware.

1.04 SUBMITTALS

A. Submit door elevation and schedule shop drawings and product data under provisions of Section General Requirements.

B. Submit stain samples for color selection. Apply finish coat to stain samples submitted.

1.05 DELIVERY, STORAGE, AND PROTECTION

A. Protect products under provisions of General Requirements.

B. Protect doors with resilient packaging, sealed with heat shrunk plastic. Break seal on site to permit ventilation.

1.06 WARRANTY

A. Provide five year manufacturer's warranty under provisions of General Requirements.

B. Warranty: Cover veneer against splitting or delaminating.

PART 2 PRODUCTS

2.01 DOOR CONSTRUCTION (AWI QUALITY STANDARD)

A. Door Core: Solid, AWI Section 1300, PC-7.

B. Fire Rated Door Core: U.L. approved mineral core or other labeled material.

C. Glazing stops: hardwood standard; U.L. approved metal for rated doors.

2.02 DOOR AND PANEL FACING

A. Facing Quality: AWI custom grade.

B. Door Veneer: Oak species wood, plain sliced, random match, running assembly for transparent finish.

2.03 ADHESIVES

A. Doors: AWI, ANSI/NWMA, Type II water resistant.

2.04 FABRICATION

A. Fabricate non-rated doors in accordance with AWI Quality Standards ANSI/NWMA I.S.1 requirements.

B. Fabricate fire rated doors in accordance with AWI Quality Standards ANSI/NWMA I.S.1 and to UL requirements. Attach fire rating label to door edge.

C. Provide flush doors with 2 inch thick edge strips of wood species to match face veneer.

D. Manufacturer shall shop prep doors for all finish hardware. Provide solid hardwood lock and hardware block.

2.05 GLASS AND GLAZING

A. Glass: full tempered or wire glass as scheduled.

2.06 FINISHES

A. Factory finish in accordance with AWI 1500 System TR-6 catalyzed polyurethane; medium gloss rubbed effect.

B. Stain color: submit color chart of full range of colors, submit samples for approval

PART 3 EXECUTION

3.01 COORDINATION

A. Coordinate with work of Section 08700 Hardware for installation requirements.

B. Coordinate with work of Section 08100 Metal Doors and Frames for frame requirements.

3.02 INSTALLATION

A. Install doors in accordance with manufacturer's instructions.

B. Machine cut relief for hinges and closers and coring for handsets and cylinders.

C. Pilot drill screw and bolt holes. Use threaded through bolts for half surface hinges.

D. Prepare doors to receive finish hardware in accordance with AWI ANSI/AWMA requirements.

E. Conform to AWI ANSI/AWMA requirements for fit tolerances.

F. Coordinate installation of glass and glazing.

3.03 INSTALLATION TOLERANCES

A. Maximum Diagonal Distortion: 1/16 inch measured with straight edge, corner to corner.

3.04 ADJUSTING AND CLEANING

A. Adjust for smooth and balanced door movement.

END OF SECTION

SECTION 08300
SPECIAL DOORS

PART 1 GENERAL

1.01 SECTION INCLUDES

A. Access panels

B. Overhead coiling counter fire doors

1.02 SUBMITTALS

A. Submit access panel schedule and product information.

B. Submit coiling fire door product data and shop drawings

1.03 COORDINATION

A. Coordinate with mechanical trades for location, size and number of access doors. Provide all doors required for above ceiling equipment and utilities. Provide all doors, sizes and locations required due to above ceiling layout.

B. Coordinate locations of access panels.

C. Coordinate with Section 09900 for finishing of shop primed items.

1.04 WARRANTY

A. Provide manufacturer's two year limited warranty (coiling fire door)

PART 2 PRODUCTS

2.01 ACCESS DOORS

A. Access panel for gypsum board walls and ceilings:

1. Door: flush to frame, primed for field painting
2. Frame: one piece textured galvanized steel taping bead flange with pre-punched holes
3. Hinge: Concealed pivoting rod
4. Latching: screwdriver operated cam latch
5. Manufacturers:
   a. Nystrom Products Company, Div. Nystrom, Inc., 1701 Madison St, N E, Minneapolis, MN 55413, (612)781-7850.
   b. Acudor Products, Inc., 371 Little Falls Rd., Cedar Grove, NJ 07009, (800) 722-0501.
   c. J.L. Industries 4450 W. 78th St. Cir., Bloomington, MN 55435-5416.
   d. Karp Associates, Inc., 54-54 43rd Street, Maspeth, NY 11378, (718) 784-9169.
   e. Milcor, 1150 N. Cable Rd., Lima, OH 45805, (800) 441-6899.

B. Overhead coiling counter fire door:

1. Manufacturer: 641 series as manufactured by Overhead Door Corp., 2501 S State Hwy. 121, Suite 200, Lewisville, TX 75067.
2. Other manufacturers:
   a. Wayne-Dalton
   b. Raynor
   c. Clopay
3. Label: 45 minute
4. Curtain: interlocking slats, Type F-128, 22 gauge stainless steel, No 4 satin finish.
5. Bottom bar: stainless steel angle.
6. Guides: stainless steel with smoke/fire seals.
7. Hood: stainless steel.
8. Automatic closure: UL approved release mechanism with 165 degree fusible link.

PART 3 EXECUTION

3.01 INSPECTION

A. Field verify opening dimensions, substrates and supports are suitable for installation.

B. Verify that openings are square, plumb and level and within tolerances for installation.

3.02 INSTALLATION

A. Install door unit assembly in accordance with manufacturer's instructions.

B. Use anchorage devices to securely fasten assembly to without distortion or stress.

C. Fit and align door assembly including hardware, level and plumb, to provide smooth operation.

3.03 TOLERANCES

A. Maintain dimensional tolerances and alignment with adjacent work.

B. Variation from Plumb: 1/16 inch maximum.

C. Variation from Level: 1/16 inch maximum.

D. Longitudinal or Diagonal Warp: Plus or minus 1/8 inch from 10 ft straight edge.

3.04 ADJUSTING AND CLEANING

A. Adjust door assembly and latching mechanism to operate smoothly.

B. Leave work area clean and free of debris.

C. Remove and replace panels or frames that are bowed warped or damaged.

END OF SECTION

SECTION 08500
ALUMINUM FRAMES AND DOORS

PART 1 GENERAL

1.01 SECTION INCLUDES

A. Aluminum Window Frames

B. Aluminum Doors

C. Aluminum Door Frames

1.02 RELATED SECTIONS

A. Section 08700 Door Hardware. Coordinate with door hardware supplier for hardware items not included in this section.

B. Section 08800 Glass and Glazing. Coordinate with glass supplier for accurate size and quantity of glass

1.03 PERFORMANCE REQUIREMENTS

A. Air infiltration per ASTM E283 < .06 CFM/sq.ft. @ 6.24 PSF.

B. Water Resistance per ASTM E331 > 8 PSF with no water penetration.

C. U factor per AAMA 1503.1 < .56.

D. Condensation Resistance Factor (CRF) per AAMA 1502.7 > 57.

E. Structural Performance per ASTM E330 limit deflection to the lesser of L/175 or 3/4 inch maximum with 1.65 safety factor.

1.04 DESIGN REQUIREMENTS

A. Permit installation of 1 inch glass unit.

B. Frame design shall be for exterior glazing, center mounted, with horizontal and vertical face covers nominal 2 inches wide.

C. Concealed perimeter anchoring.

D. Exterior frames shall be of poured-and-debridged thermally broken design, designed and fabricated per AAMA TIR-A8-90.

E. Framing system shall structurally support and adequately cushion the glass to prevent mechanical or thermal stresses on the glass.

F. Frame system shall be screw applied pressure plate and cover plate design.

1.05 SUBMITTALS

A. Submit frame elevation and detail shop drawings and product data under provisions of Section 01300.

1.06 COORDINATION

A. Coordinate door, frames and manufacturer supplied hardware with builder's hardware supplied by others.

B. Provide required power supply, power converters and other required products to integrate system.

C. Coordinate with electrician and security/control systems for installation and connection of electric hardware.

PART 2 PRODUCTS

2.01 MATERIALS

A. Aluminum: 6063-T5 extrusions.

B. Aluminum finish: Architectural Class I anodized finish, clear

C. Glazing gaskets: elastomeric extrusions, EPDM or other Architect approved material.

D. Fasteners: aluminum, stainless steel, or zinc coated.

E. Perimeter anchors: aluminum or steel, with steel isolated from aluminum.

2.02 ALUMINUM DOORS

A. Full Light Medium Stile Aluminum Door: dimensions - 3 ½ inches vertical stiles, 3 ½ inches top rail, 12 inches bottom rail.

2.03 HARDWARE

A. Hinges: Door manufacturer's standard hardware.

B. Exit devices: Door manufacturer's standard rim latch exit device compatible with electric strikes where required.

C. Push bars and pulls: Door manufacturer's standard hardware.

D. Closers: Door manufacturer's standard hardware, parallel arm, with back-check.

E. Threshold: Door manufacturer's standard hardware, ½ inch x 4 x door width.

F. Weatherseals: Door manufacturer's standard hardware, full door perimeter.

G. Sweeps: Door manufacturer's standard hardware

2.04 FABRICATION

A. Corner construction shall consist of mechanical clip fastening or deep penetration and fillet welds.

B. Provide concealed weep holes at sills.

2.05 GLASS

A. Glass: as scheduled and specified in Section 08800.

2.06 ACCESSORIES

A. Exterior window sill flashing: Formed, Aluminum 3003, 0.032 inch thickness, smooth texture, finish matching window frames.

2.07 OPERABLE WINDOWS

A. Aluminum: 6063-T5 extrusions.

B. Aluminum finish: Architectural Class I anodized finish, clear

C. Glazing gaskets: elastomeric extrusions, EPDM or other Architect approved material.

D. Fasteners: aluminum, stainless steel, or zinc coated.

E. Crank operators: manufacturer standard for awning operation.

F. Insect screen: manufacturer standard in extruded aluminum frame, removeable.

G. Hinges: manufacturer standard.

H. Aluminum finish – Clear Anodized.

PART 3 EXECUTION

3.01 INSPECTION

A. Verify wall openings and adjoining materials are ready to receive work of this Section.

B. Beginning of installation means acceptance of existing conditions.

3.02 INSTALLATION

A. Install doors, frames, glazing and hardware in accordance with manufacturer's instructions.

B. Use anchorage devices to securely attach frame assembly to structure.

C. Align assembly plumb and level, free of warp or twist. Maintain assembly dimensional tolerances, aligning with adjacent work.

D. Install sill and jamb flashings where shown on drawings.

E. Pack fibrous insulation in shim spaces at perimeter of assembly to maintain continuity of thermal barrier.

F. Maintain frame weeps free and open, do not obstruct drainage.

G. Install hardware using templates provided

H. Install glass and infill panels in accordance with door manufacturer's requirements.

I. Install perimeter sealant, backing materials, and installation requirements in accordance with Section 07900.

J. Adjust operating hardware and test hardware. Test and adjust hardware in conjunction with Testing of work of General Requirements.

3.03 CLEANING

A. Remove protective material from pre-finished aluminum surfaces.

B. Wash down exposed surfaces using a solution of mild detergent in warm water, applied with soft, clean wiping cloths. Take care to remove dirt from corners. Wipe surfaces clean.

C. Remove excess sealant by moderate use of mineral spirits or other solvent acceptable to sealant manufacturer.

END OF SECTION

SECTION 08700
DOOR HARDWARE

PART 1 GENERAL

1.01 SECTION INCLUDES

A. Door Hardware

1.02 RELATED SECTIONS

A. Section 08500 Aluminum Doors and Frames. Supply hardware items required for door but not supplied by door manufacturer

1.03 REFERENCES

A. ADA Accessibility Guidelines for Buildings and Facilities

1.04 SUBMITTALS

A. Submit hardware schedule shop drawings and product data under provisions of the General Requirements. Submit summary of changes resulting from meeting with Owner.

B. Submit keying schedule for Architect records. Keying schedule will not be reviewed.

C. Include product cut sheets, schedule of hardware indicating each door and hardware. Note any hardware conflicts, provide recommendations.

1.05 PROJECT RECORD DOCUMENTS

A. Maintain and submit project record documents for lock keying under provisions of the General Requirements.

1.06 OPERATION AND MAINTENANCE DATA

A. Submit operation and maintenance data for door hardware under provisions of the General Requirements.

1.07 COORDINATION

A. Builder’s hardware items are scheduled for standard hollow metal, wood and aluminum doors. Coordinate with Contractors and suppliers for items scheduled but not supplied by others. Supply all products not provided by others

B. Verify hinges and closer are sized appropriately for door size and weight with hardware manufacturer. Provide appropriate product, notify Architect of adjustments.

C. Verify products are appropriate for exiting requirements prior to ordering. Provide fail safe products along path of egress. Coordinate with control and alarm systems for control of doors along path of egress.

D. Verify with Owner that hardware style, finish and operation is acceptable.

E. Hardware supplier shall meet with Owner and Construction Manager to establish keying and to verify lock function, explain available lock functions and those selected for doors. Provide keying and functions as determined by this meeting. Submit summary of changes with hardware schedule for incorporation into review.

PART 2 PRODUCTS

2.01 DOOR HARDWARE

A. Scheduled Hardware Manufacturers:

1. Closers: provide closers sized for door from series scheduled
   a. LCN Closers, Div. Ingersoll-Rand, 121 W Railroad Ave, Princeton, IL 61356, (815) 875-3311
   b. Stanley Hardware, 480 Myrtle Street, New Britain, CT 06053, (800) 337-4393
2. Electric strikes:
   a. Von Duprin, Div. Ingersoll-Rand, 2720 Tobey Drive, Indianapolis, IN 46219, (317) 897-9944
   b. Security Door Controls, P.O. Box 6219, Westlake Village, California 91359-6219, (800) 413-8783
3. Exit devices:
   a. Von Duprin, Div. Ingersoll-Rand, 2720 Tobey Drive, Indianapolis, IN 46219, (317) 897-9944
   b. Precision Hardware, Inc., P.O. Box 74040, Romulus, MI 48174-0040, (734) 326-7500
4. Hinges:
   a. McKinney Products Co., Essex Industries, 820 Davis St., Scranton, PA 18505, (717) 346-7551
   b. Stanley Hardware, 480 Myrtle Street, New Britain, CT 06053, (800) 337-4393
5. Kickplates: Rockwood Mfg. Co., P.O. Box 79, Rockwood, PA 15557, (814) 926-2026
6. Locks:
   a. Newport style trim with wrought rose or escutcheon, 626 finish, Corbin Russwin Architectural Hardware, 225 Episcopal Road, Berlin, CT 06037, (203) 225-7411
   b. Best Access Systems, 6161 East 75th Street, Indianapolis, IN, 46250, (317) 849-2250
7. Magnetic switches:
   a. Von Duprin, Div. Ingersoll-Rand, 2720 Tobey Drive, Indianapolis, IN 46219, (317) 897-9944
   b. Security Door Controls, P.O. Box 6219, Westlake Village, California 91359-6219, (800) 413-8783
8. Overhead stops:
   a. Glynn-Johnson, Div. Ingersoll-Rand, 2720 Tobey Drive, Indianapolis, IN 46219, (317) 897-9944
   b. Rockwood Mfg. Co., P.O. Box 79, Rockwood, PA 15557, (814) 926-2026
9. Power Transfers:
   a. Von Duprin, Div. Ingersoll-Rand, 2720 Tobey Drive, Indianapolis, IN 46219, (317) 897-9944
   b. Precision Hardware, Inc., P.O. Box 74040, Romulus, MI 48174-0040, (734) 326-7500
10. Pulls: Rockwood Mfg. Co., P.O. Box 79, Rockwood, PA 15557, (814) 926-2026.

11. Pushes: Rockwood Mfg. Co., P.O. Box 79, Rockwood, PA 15557, (814) 926-2026.
12. Saddles:
    a. National Guard Products, Inc., 540 North Parkway, Memphis, TN 38105, (800) 647-7874
    b. Durable Products Inc., P.O. Box 520, 2717 Bushmill Road, Frankfort, OH 45628, (800) 237-8549
13. Sweeps:
    a. National Guard Products, Inc., 540 North Parkway, Memphis, TN 38105, (800) 647-7874
    b. Durable Products Inc., P.O. Box 520, 2717 Bushmill Road, Frankfort, OH 45628, (800) 237-8549
14. Thresholds:
    a. National Guard Products, Inc., 540 North Parkway, Memphis, TN 38105, (800) 647-7874
    b. Durable Products Inc., P.O. Box 520, 2717 Bushmill Road, Frankfort, OH 45628, (800) 237-8549
15. Wall stops: Rockwood Mfg. Co., P.O. Box 79, Rockwood, PA 15557, (814) 926-2026.
16. Weatherseals: National Guard Products, Inc., 540 North Parkway, Memphis, TN 38105, (800) 647-7874.

B. Other Hardware Manufacturers:

1. Closers: Norton Door Controls
2. Electric Strikes: Folger Adams
3. Exit Devices: Corbin Russwin, Sargent Manufacturing
4. Hinges: Hager Companies
5. Locks: Schlage Lock Co., Sargent Manufacturing, Yale Security
6. Overhead stops: Rixon Specialty Products

PART 3 EXECUTION

3.01 PREPARATION

A. Protect elements that surround the work of this Section from damage or disfigurement

B. Furnish diagrams, templates, instructions, and directions for installation. Distribute to other trades items required to be installed by other trades.

3.02 EXAMINATION

A. Verify that doors are prepared and in place, and that preps are correctly sized and ready to receive work.

B. Verify field measurements are as shown on shop drawings.

C. Verify that required utilities are available, in proper locations, and ready for use.

D. Beginning of installation means installer accepts existing conditions.

3.03 INSTALLATION

A. Do not install products which are observed to be defective.

B. Handle and install in accordance with manufacturer's instructions. For conditions where printed instructions are not available or do not apply consult with manufacturer's technical representative.

C. Mounting heights for hardware from finished floor shall comply with ADA.

D. Perform cutting, drilling, and fitting required for the installation complying with templates or detail drawings and project conditions.

3.04 ADJUSTING

A. Adjust, balance, and level equipment.

B. Verify equipment functions properly and that keying is correct. Make any corrections that are required.

3.05 CLEANING

A. Clean equipment with recommended products and surrounding area of debris, packing materials and other soil that occurred through installation.

B. Remove non-permanent labels, non-permanent protective coatings, identifying marks, and foreign materials.

C. Clean concealed work prior to enclosure.

END OF SECTION

SECTION 08800
GLASS AND GLA□ING

PART 1 GENERAL

1.01 SECTION INCLUDES

A. Glass

B. Glass Units

C. Glazing Accessories

1.02 REFERENCES

A. BOCA National Building Code 1993 Section 2405.0 Safety Glazing.

1.03 QUALITY ASSURANCE

A. Conform to Flat Glass Marketing Association (FGMA) Glazing Manual Glazing Sealing Systems Manual for glazing installation methods.

B. Label safety

1.04 DELIVERY, STORAGE, AND PROTECTION

A. Deliver, store and protect products under provisions of the General Requirements.

1.05 WARRANTY

A. Provide five year manufacturer's warranty under provisions of the General Requirements.

B. Warranty: Include coverage of sealed glass units from seal failure, inner pane dusting or misting, and replacement of same.

PART 2 PRODUCTS

2.01 GLASS

A. Glass: Annealed; float glass; 1/4 inch thick minimum.

B. Safety Glass: Fully tempered; 1/4 inch thick minimum.

C. Wire Glass: Tempered; polished; diamond wire mesh; 1/4 inch thick minimum.

D. Tinted Glass: Low-E, glass and safety glass as condition requires, solar bronze.

E. Ballistic Glazing: glass clad polycarbonate, UL 752 level IV / NIJ level III

F. Mirrored glass 1/4" float glass; mirror glazing quality; silvered with electrolytic copper plating and protective paint.

G. Labeling: Each unit of tempered glass shall be permanently identified by the manufacturer. The identification shall be etched or ceramic fired on the glass and shall be visible when the unit is glazed in lower left corner of unit. Tempered spandrel glass shall be labeled with a removable paper label by manufacturer. Permanently label each piece of FireLite with the FireLite logo, UL logo and fire rating.

2.02 GLASS UNITS

A. 1 inch glass unit: Double pane units with total unit thickness of 1 inch, tempered and tinted units as scheduled.

B. Insulated ballistic unit: double pane unit with outer pane of standard glass matching standard insulated unit and inner pane of ballistic glass with ½ inch spacer. Verify ballistic rating is maintained with glass manufacturer

C. Tempered units shall have outer and inner panes of tempered glass.

D. Tinted units shall have outer pane of tinted glass and inner pane of clear glass, #2 surface reflective.

E. Sliding Glass Doors: 1/4" thick tempered

2.03 GLAZING ACCESSORIES

A. Spacer: Aluminum with welded or soldered corners and desiccant fill. Finish of exposed edge to match aluminum frames.

B. Primary Seal: Butyl tape or mastic, unvolcanized; 10 - 15 shore A hardness..

C. Secondary Seal: Silicone; 40 - 50 shore A hardness

D. Setting Blocks: Neoprene, EDPM, or silicone; Shore A hardness of 85 + 5, sized 0.1 inch length per square foot of glass area (4 inches minimum), 1/16 inch narrower than channel width, height to provide recommended nominal bite and minimum edge clearance, two identical blocks per glass unit,

E. Anti-walk Spacer Blocks: Neoprene, EDPM, or silicone; 40-60 Shore A durometer hardness; 6 inch minimum length, 1/4 inch thick, width equal to unit thickness.

F. Mirror mounting brackets: stainless steel edge tabs with concealed attachment for wall mounting of mirror glass, provide as recommended by manufacturer, minimum 2 top and 2 bottom

PART 3 EXECUTION

3.01 INSPECTION

A. Verify surfaces of glazing channels or recesses are clean, free of obstructions, and ready for work of this Section.

B. Beginning of installation means acceptance of substrate.

3.02 PREPARATION

A. Clean contact surfaces with solvent and wipe dry.

B. Seal porous glazing channels or recesses.

C. Prime surfaces scheduled to receive sealant.

3.03 GLAZING

A. Install insulated glass units into aluminum frames using setting blocks, anti-walk spacer blocks and gaskets as recommended by aluminum frame manufacturer.

B. Locate setting blocks at quarter points with their nearest edge no closer than 6 inches to the corner of the unit.

C. Locate anti-walk spacers at mid-point of both jambs.

3.04 CLEANING

A. After installation, mark pane with an "X" by using plastic tape or removable paste

B. Remove labels after work is completed.

END OF SECTION

SECTION 0□250
GYPSUM BOARD SYSTEMS

PART 1 GENERAL

1.01 SECTION INCLUDES

A. Framing.

B. Gypsum board and sheathing

C. Accessories

1.02 REFERENCES

A. Gypsum Association GA-214, Levels of Gypsum Board Finish

B. Gypsum Association GA-216-89, Application and Finishing of Gypsum Board

C. Underwriters Laboratories Fire Resistance Directory, 1995.

PART 2 PRODUCTS

2.01 FRAMING

A. Standard metal studs: C profile; with runners of same material; unless otherwise indicated gages based on size, spacing and height as follows:

size and spacing	maximum height per size and gage		
	25 gage	22 gage	20 gage
3 5/8" at 16" on center	16'-0"	17'-3"	18'-3"
3 5/8" at 24" on center	13'-6"	15'-0"	16'-0"
6" at 16" on center	20'-0"	25'-3"	26'-6"
6" at 24" on center	15'-0"	22'-0"	23'-3"

Studs for wall to receive ceramic tile finish shall be 3 5/8", 20 gage minimum at 16" on center maximum.

B. Furring channels: 1 5/8 inches hat sections 25 gage metal

C. Fasteners: Self-drilling, self-tapping, bugle head screws.

D. Anchorage Devices: Power driven, drilled expansion bolts or screws with sleeves.

2.02 CEILING/BULKHEAD FRAMING

A. Select from the following systems:

1. Conventional framing system
   a. Cross Furring: 3/4 inch rolled channel; 0.30 lb/ft.
   b. Main Runners: 1 1/2 inches hot rolled channel; 1.12 lb/ft.

c. Hangers: 8 gage galvanized wire.
d. Galvanizing: ASTM A526 G60, minimum.

2. Suspended T framing system: Drywall furring system by Armstrong Ceilings, Suspension System & Acoustical Walls, (888) 234-5464

2.03 GYPSUM BOARDS

A. Regular gypsum board: ASTM C36; 5/8 inch thick, square cut ends, tapered edges

B. Water Resistant Gypsum Board: ASTM C630; 5/8 inch thick, ends square cut, square edges

C. Tile backer board: Mortar Board, Durock Brand Cement Board manufactured by United States Gypsum Company, 125 South Franklin Street, P.O. Box 806278, Chicago, Il 60680-4124, (877) 874-6655

D. Fire rated gypsum board: Type X gypsum board: ASTM C36; fire resistive type, UL rated; 5/8 inch thick, ends square cut, square edges

E. Water Resistant Gypsum Board: ASTM C630; 5/8 inch thick, ends square cut, square edges

2.04 ACCESSORIES

A. Corner bead: ASTM C1047; preformed metal angle.

B. Expansion joint: ASTM C1047; preformed metal 'V' with flanges.

C. Vapor barrier: 6 mil, polyethylene sheet

D. Sound batt insulation: ASTM C665 Type I, 4 inches thick, unfaced fiberglass.

PART 3 EXECUTION

3.01 COORDINATION

A. Coordinate with other work for installation of blocking and anchors

B. Coordinate with electrical and mechanical work for installation of bucks, anchors, and blocking to be placed in or behind stud framing.

3.02 EXAMINATION

A. Verify that conditions are ready to receive work.

B. Verify field measurements are as shown on Drawings.

C. Verify that rough-in utilities are properly located.

D. Beginning of installation means installer accepts existing conditions.

3.03 CEILING AND SOFFIT FRAMING

A. Select from framing system options install suspended T system as recommended by manufacturer for anticipated loads. Install conventional system as listed below.

B. Install hangers at 4 feet on center maximum both directions. Coordinate placement of hangers with structure and mechanical above.

C. Install main runners parallel to line of building equally spaced at 4 feet on center maximum. Use galvanized material at areas of high humidity.

D. Install cross runners perpendicular to main runners spaced at 16 inches on center. Use galvanized material at areas of high humidity.

E. Install perimeter J-bead at all location where ceilings abut walls maintain tight joint. Install control joints at not more than 30 feet on center both directions.

3.04 ERECTION STUD WALLS

A. Align top and bottom runners, secure runners at 24 inches o.c.

B. Fit runners under and above openings; secure intermediate studs at spacing of wall studs

C. Install studs vertically

D. Connect studs to tracks with fasteners

E. Stud splicing permissible. Limit to 10 percent of studs and 30 percent or more of length. Splice studs with 8 inch nested lap, secure each stud flange with flush head screw

F. Construct corners using minimum three studs

G. Double studs at wall openings, door and window jambs, and not more than 2 inches each side of openings

H. Brace stud framing system and make rigid

I. Coordinate erection of studs with requirements of door and window frame supports and attachments

J. Align stud web openings

K. Install blocking for support of plumbing fixtures, toilet partitions, wall cabinets, toilet accessories, hardware, and other built-in items

L. Install sound batt insulation in all stud partitions

3.05 FURRING INSTALLATION

A. Align and secure furring to wall tight to adjacent surfaces.

B. Install furring at 24 inches on centers. Coordinate installation of insulation at exterior walls. Install insulation tight to web of Z furring on both sides.

C. Construct corners using minimum two members.

D. Install furring on exterior wall to full height and to 12" above ceiling at interior walls.

3.06 CEILING FRAMING INSTALLATION

A. Install hangers at 4 feet on center maximum both directions. Coordinate placement of hangers with structure and mechanical above.

B. Install main runners parallel to line of building equally spaced at 4 feet on center maximum. Use galvanized material at areas of high humidity.

C. Install cross runners perpendicular to main runners spaced at 16 inches on center. Use galvanized material at areas of high humidity.

D. Install perimeter J-bead at all location where ceilings abut walls maintain tight joint. Install control joints at not more than 30 feet on center both directions.

3.07 GYPSUM BOARD INSTALLATION

A. Install gypsum board in accordance with manufacturer's instructions and GA - 216-89.

B. Erect gypsum board perpendicular to framing with ends and edges occurring over firm bearing.

C. All partitions shall extent full height from floor to underside of deck. Install sound batt insulation within all wall cavities and gypsum board sheathing full height of the wall.

D. Place corner beads at external corners. Use longest practical length. Place edge trim where gypsum board joint that will remain exposed abuts dissimilar materials.

E. Install FiberBond in accordance with current FiberBond Wallboard Guide to installation number 6-5-A/S

F. Install tile backer board to 12" above ceiling height on partition in shower rooms.

3.08 BULLET RESISTANT FIBERGLASS

A. Install bullet resistant fiberglass in accordance with manufacturer’s instructions.

B. Reinforce joints with minimum 4 inch wide bullet resistant fiberglass, 2 inch overlap each side of joint.

C. Install in locations indicated on the drawings.

3.09 JOINT TREATMENT

A. Standard finish level of gypsum board shall be GA-214 level 4.

B. Finish level of gypsum board for areas to receive luminous paint shall be GA-214 level 5

C. Finish level of gypsum board above ceiling hidden to view shall be GA-214 level 1.

D. Tape and as instructed by manufacturer.

END OF SECTION

SECTION 09300
TILE

PART 1 GENERAL

1.01 SECTION INCLUDES

A. Floor Tile

B. Base Tile

C. Wall Tile

D. Setting Materials

E. Grouting Materials

F. Accessories

1.02 RELATED SECTIONS

A. Room Finishes Schedule

1.03 REFERENCES

A. Tile Council of America, Handbook for Ceramic Tile Installation

1.04 SUBMITTALS

A. Submit information indicated in the selected interior finishes table.

B. Indicate various materials, styles where applicable and sub contractor.

C. Color selections will be made from submitted information

1.05 OPERATION AND MAINTENANCE DATA

A. Submit cleaning and maintenance data under provisions of the General Requirements.

1.06 COORDINATION

A. Coordinate with work of Section 03300 for floor slab recesses and requirements prior to placement of slabs.

B. Color and style shall be selected by Architect. Submit sample for selection in advance of material order. Assume a percent of tile area will be of an accent color for bidding. Refer to Architectural drawings for details.

PART 2 PRODUCTS

2.01 FLOOR TILE

A. Porcelain paver tile manufactured by Crossville Ceramics Co, P.O. Box 1168 Industry Pkwy, Crossville, TN 38555, (615) 484-8418:

1. PVT-1A: Empire, all price groups, unpolished, 7 x 21 inches, field tile color.
2. PVT-1B&C: Empire, all price groups, unpolished, 7 x 21 inches, accent tile colors.
3. PVT-2A: Empire, all price groups, unpolished, 7 x 7 inches, field tile color.
4. PVT-2B&C: Empire, all price groups, unpolished, 7 x 7 inches, accent tile colors.

B. Ceramic mosaic tile:

1. CMT-1A Field tile color, CMT-1B&C Accent tile colors: select from the following products:
   a. Unglazed ceramic mosaics, group 2, 2 x 2 inches as manufactured by American Olean Tile Company, 1000 Cannon Ave.,Lansdale,PA 19446, (215) 393-2705.
   b. Unglazed ceramic mosaics, group 2, 2 x 2 inches as manufactured by Dal-tile Corporation, 7834 C.F.Hawn Freeway, Dallas, Texas 75217, 1-800-933-8453.
2. CMT-2
   a. Lyndhurst Mosaics, 2x2 inches as manufactured by American Olean Tile Company, 1000 Cannon Ave., Lansdale, PA 19446, (215) 393-2705.

2.02 BASE TILE

A. Porcelain base tile manufactured by Crossville Ceramics Co., P.O. Box 1168 Industry Pkwy, Crossville, TN 38555, (615) 484-8418:

1. PTB-1: Empire, all price groups , unpolished,
   a. 7” x 21” tile as base where there is wall tile.
   b. 3” x 14” inches bullnose at outside corners.
   c. 6” x 14” cove base for areas without wall tile. Install cove base prior to floor tile.
2. PTB-2: Empire, all price groups , unpolished,
   a. 7” x 21” tile as base where there is wall tile.
   b. 3” x 14” inches bullnose at outside corners.
   c. 6” x 14” cove base for areas without wall tile. Install cove base prior to floor tile.

B. CMB: 6" high consisting of 1 row of 2" cove, and 2 rows of 2’’ straight. Mosaic base tile by the same manufacturer as the ceramic mosaic floor tile.

2.03 WALL TILE

A. Ceramic wall tile as manufactured by American Olean Tile Company, 1000 Cannon Ave., Lansdale, PA 19446, (215) 393-2705 :

1. CWT-1A: price group 2, matte 6 x 6”
2. CWT-2A: Urban Canvas, all colors, 4 ¼ x 8 ½” inches.
3. CWT-2B: Urban Canvas, all colors, 4 ¼ x 8 ½” inches.
4. CWT-2C: Matte, price group 3 colors, 4 ¼ x 4 ¼ ” inches.

B. Wall tile trim: size, color, and shade to match field tile for the following

1. Wainscot cap - bullnose

2. Incorners - square or round.
3. Outcorners - bullnose.
4. Jambs - Bullnose where tile work projects from jamb.

2.04 SETTING MATERIALS

A. Epoxy mortar, A118.3

B. Latex-Portland Cement mortar, ANSI A108.5 and A118.4

2.05 GROUTING MATERIALS

A. Epoxy grout: color as selected by Architect from full range of available colors

B. Polymer Modified Tile Grout (sanded and unsanded): ANSI A108.10, A118.6 and A118.7, color as selected by Architect from a full range of possible colors.

2.06 ACCESSORIES

A. Movement joints and transitions strips: Anodized aluminum color as selected by Architect.

PART 3 EXECUTION

3.01 EXAMINATION

A. Verify that surfaces are ready to receive work.

B. Coordinate installation method as required for existing and new substrate materials.

C. Beginning of installation means installer accepts condition of existing substrate.

3.02 PREPARATION

A. Protect surrounding work from damage or disfigurement.

B. Vacuum clean existing substrate and damp clean.

C. Seal substrate surface cracks with filler. Level existing substrate surfaces to acceptable flatness tolerances.

D. Apply conditioner to surfaces as recommended by adhesive manufacturer.

3.03 INSTALLATION - GENERAL

A. Request tile pattern from Interior Design Consultant. Do not interrupt tile pattern through openings.

B. Cut and fit tile tight to penetrations through tile. Form corners neatly.

C. Cut floor tile that would bridge construction or control joints in concrete slabs at the joint continuing pattern either side of joints.

D. Place tile joints uniform in width, subject to variance in tolerance allowed in tile size. Make joints watertight, without voids, cracks, excess mortar, or excess grout.

E. Sound tile after setting. Replace hollow sounding units.

F. Allow tile to set for a minimum of 48 hours prior to grouting.

G. Grout tile joints, use epoxy grout.

H. Grout glazed block joints at same time using same material as used for floor tile.

3.04 INSTALLATION - FLOOR FINISH

A. Standard Installation: Latex-Portland Cement Mortar and Grout - TCA Handbook for Ceramic Tile Installation, 2002 Handbook Number F113-02.

B. Wet Area Installation (showers): Epoxy Mortar and Grout - TCA Handbook for Ceramic Tile Installation, 2002 Handbook Number F116-02

C. Maintain grout joint equal to spacing within panel for mosaic tile.

D. Provide movement joint at floor slab control joints, provide transition strip where floor tile terminate along a horizontal surface.

3.05 INSTALLATION – WALL FINISH

A. Wet Area Installation (showers): Epoxy Mortar and Grout

B. Standard Installation: Mortar and Grout - TCA Handbook for Ceramic Tile Installation, 2002 Handbook Number W243-02.

C. Maintain grout joint equal to spacing within panel for mosaic tile

3.06 CLEANING

A. Clean work under provisions of the General Requirements.

B. Clean tile surfaces.

3.07 PROTECTION

A. Protect finished installation.

B. Do not permit traffic over finished floor surface.

END OF SECTION

SECTION 0 500
ACOUSTICAL TREATMENT

PART 1 GENERAL

1.01 SECTION INCLUDES

A. Acoustical Ceiling Systems

1.02 ENVIRONMENTAL REQUIREMENTS

A. Maintain uniform temperature of minimum 60 degrees F and humidity of 20 to 40 percent prior to, during, and after installation.

1.03 SEQUENCING/SCHEDULING

A. Do not install acoustical ceilings until building is enclosed, sufficient heat is provided, dust generating activities have terminated, and overhead work is completed, tested, and approved.

B. Schedule installation of acoustic units after interior wet work is dry.

PART 2 PRODUCTS

2.01 ACOUSTICAL CEILING SYSTEMS

A. Ceiling Panels: manufactured by Armstrong Architectural Building Products, (800) 448-1405.

1. AC-1: Suspended Acoustical
   a. Panels: No 756 2x2 Fissured, Square Lay-in medium texture, 15/16” grid face.
   b. Suspension system: Prelude 15/16” pre-finished Tees and pre-finished wall angles, white color, design appropriate for panel, wire hangers.
   c. Panels: use 2x4 pads in areas that have existing 2x4 grid.
2. AC-2: Suspended Acoustical
   a. Panels: No 538 2x2 CirrusTegular fine texture, beveled tegular, 9/16” grid face.
   b. Suspension system: Suprafine 9/16” pre-finished Tees and pre-finished wall angles, white color, design appropriate for panel, wire hangers.
3. AC-3: Suspended Acoustical
   a. Panels: No 607 2x2 Fine Fissured Ceramaguard, square lay-in, 15/16” grid face.
   b. Suspension system: Prelude 15/16” pre-finished Tees and pre-finished wall angles, white color, design appropriate for panel, wire hangers.
4. AC-4: Suspended Acoustical
   a. Panels: No 3254 2x2 Optima Open Plan Tegular fine texture, square tegular, 9/16” grid face.
   b. Suspension system: Suprafine 9/16” pre-finished Tees and pre-finished wall angles, white color, design appropriate for panel, wire hangers.
5. Accessories: retention clips, designed for suspension system.

B. Other Manufacturer's:

1. Celotex Corporation, Post Office Box 31602, Tampa Florida 33631.
2. USG Interiors, Inc., 125 South Franklin Street, Chicago, IL 60606-4678, (312) 606-4000.

C. Other Manufacturer's Components: Of same material, performance and appearance as selected by listed manufacturers are acceptable

PART 3 EXECUTION

3.01 INSTALLATION ACOUSTICAL CEILING

A. Verify that existing conditions are ready to receive work.

B. Verify that layout of hangers will not interfere with other work.

C. Measure each room to determine best layout. Direct questions regarding layout to Architect. Verify layout with mechanical requirements. Doubling of tee members shall not be permitted.

D. Install system in accordance with manufacturer's instructions.

E. Install system capable of supporting imposed loads to a deflection of 1/360 maximum.

F. Install after major above ceiling work is complete and has been tested. Coordinate the location of hangers with other work.

G. Hang system independent of ducts, pipes and conduit. Where carrying members are spliced, avoid visible displacement of face plane of adjacent members.

H. Where ducts or other equipment prevent the regular spacing of hangers, reinforce the nearest affected hangers and related carrying channels to span the extra distance.

I. Do not support components on main runners or cross runners if weight causes total dead load to exceed deflection capability. Support fixture loads by supplementary hangers located within 6 inches of each corner; or support components independently.

J. Do not eccentrically load system, or produce rotation of runners.

K. Install edge molding at intersection of ceiling and vertical surfaces, using longest practical lengths. Miter corners. Provide edge moldings at junctions with other interruptions. Field rabbet tile panel edge. Where bullnose concrete block corners round obstructions occur, provide preformed closers to match edge molding.

L. Fit acoustic units in place, free from damaged edges or other defects detrimental to appearance and function.

M. Lay directional patterned units one way with pattern parallel to shortest room axis. Fit border neatly against abutting surfaces.

N. Install acoustic units level, in uniform plane, and free from twist, warp and dents.

O. Provide retention clips at inmate accessible areas for ceilings at or below 10 feet above floor directly below. Provide clips to hold each panels at four points.

3.02 CLEANING

A. Clean wall coverings of excess adhesive, dust, dirt, and other contaminants.

B. Replace wall plates and accessories removed prior to work of this Section.

3.03 TOLERANCES

A. Variation from Flat and Level Surface: 1/8 inch in 10 ft non-cumulative

B. Variation from Plumb of Grid Members Caused by Eccentric Loads: Two degrees maximum.

END OF SECTION

SECTION 0□650
RESILIENT FLOORING AND ACCESSORIES

PART 1 GENERAL

1.01 SECTION INCLUDES

A. Tile Flooring

B. Stair Treads and Risers

C. Base

D. Accessories

1.02 OPERATION AND MAINTENANCE DATA

A. Submit cleaning and maintenance data under provisions of the General Requirements.

B. Include maintenance procedures and recommended maintenance materials.

1.03 ENVIRONMENTAL REQUIREMENTS

A. Store materials for three days prior to installation in area of installation to achieve temperature stability

B. Maintain ambient temperature required by adhesive manufacturer three days prior to, during, and 24 hours after installation of materials.

1.04 SUBMITTALS

A. Submit information indicated in the selected interior finishes table.

B. Indicate various materials, styles where applicable and sub contractor.

C. Color selections will be made from submitted information.

PART 2 PRODUCTS

2.01 TILE FLOORING

A. Vinyl Composition Tile manufactured by Mannington Commercial Floors, 1644 U.S. Hwy 41 S.E., Calhoun, GA 30703 (800) 241-2262.

1. VCT-1A: Inspirations – used as field color.
2. VCT-1B: Essentials and Designer Essentials – used as accent color.
3. VCT-1C: Essentials and Designer Essentials – used as accent color.
4. VCT-2A: Color Point – used as accent color.
5. VCT-2B: Solid Point – used as accent color.

6. VCT-2C: Solid Point – used as accent color.

2.02 STAIR TREADS AND RISERS

A. Rubber stairs treads and risers as manufactured by Roppe;

1. ST-1: 93 textured, Fiesta, SafeTcork style.
2. SR-1: smooth, Fiesta, SafeTcork style.

2.03 BASE

A. Rubber Wall Base: Federal Specification SS-W-40A Type 1; 4 inches high x 120 feet roll, 0.125 inch thickness, cove and straight profile as scheduled, preformed corners, manufacturer's standard color as selected from Johnsonite or Roppe.

1. RB-1: coved, color as selected
2. RB-2: coved, color as selected
3. RB-3: straight, color as selected

2.04 ACCESSORIES

A. Moldings: vinyl; reducers, transitions, and edge guards as manufactured by Johnsonite or Roppe.

B. Adhesives: as recommended by manufacturer.

PART 3 EXECUTION

3.01 EXAMINATION

A. Verify that surfaces are smooth and flat with maximum variation of 1/8 inch in 10 ft, and are ready to receive Work.

3.02 PREPARATION

A. Apply primer to surfaces recommended by manufacturer.

3.03 INSTALLATION - GENERAL

A. Install in accordance with manufacturers' instructions.

B. Spread only enough adhesives to permit installation of materials before initial set.

C. Fit joints tightly.

3.04 INSTALLATION - BASE MATERIAL

A. Fit joints tight and vertical. Maintain minimum joints.

B. Miter internal corners. At external corners, use molded units or 'V' cut back of base strip to 2/3 of its thickness and fold as directed by Architect. At exposed ends use molded units.

C. Install base on solid backing. Bond tight to wall surfaces.

D. Scribe and fit to door frames and other interruptions.

3.05 PROTECTION

A. Prohibit traffic on floor finish for 48 hours after installation.

3.06 CLEANING

A. Remove excess adhesive from floor, base, and wall surfaces without damage.

B. Clean, seal, and wax floor and base surfaces in as required and accordance with manufacturer's instructions.

END OF SECTION

SECTION 0□680
CARPET

PART 1 GENERAL

1.01 SECTION INCLUDES

A. Sheet Carpet

B. Backing

C. Base

D. Accessories

1.02 QUALITY ASSURANCE

A. All sheet carpeting supplied to Job shall be from the same manufacturer

1.03 SUBMITTALS

A. Submit information indicated in the selected interior finishes table.

B. Indicate various materials, styles where applicable and sub contractor.

C. Color selections will be made from submitted information

D. Submit seaming drawing for approval by Architect.

E. Submit carpet fire rating certificate.

1.04 OPERATION AND MAINTENANCE DATA

A. Submit cleaning and maintenance data under provisions of the General Conditions.

1.05 COORDINATION

A. Assume multiple coordinating carpets styles will be used for bidding.

B. Assume carpet border will be used in common and conference areas for bidding.

C. Colors and style shall be selected by the Architect. Obtain layout with color selection.

PART 2 PRODUCTS

2.01 SHEET CARPET

A. Select one from the following manufacturers, provide all carpet as scheduled from the same manufacturer styles listed for each code for each manufacturer

B. Mannington Commercial, 1844 US Highway 41 SE, Calhoun, GA 30701 (706) 629-7301.

1. CPT-1: Lateral Thinking III – color choice TBD
2. CPT-2: Intuition III – color choice TBD
3. CPT-3: Motivation III – color choice TBD
4. CPT-4: Color Canvas – color choice TBD
5. CPT-5: Simmer – color choice TBD

C. J & J Commercial, J&J Drive, Dalton, GA 30722-1287.

1. CPT-1: Pointillism – color choice TBD
2. CPT-2: Impressionism – color choice TBD
3. CPT-3: Cubism – color choice TBD
4. CPT-4: Tumbled Stone– color choice TBD
5. CPT-5: Invision – Tussah – color choice TBD

2.02 BACKING

A. Provide sheet carpet with minimum 10-year Back Warranty, Tuft bind, Edge Ravel, Delamination, Static and Wear.

2.03 BASE

A. Carpet Base: same material as adjacent floor carpet, 4 inches, bound exposed edges.

2.04 ACCESSORIES

A. Adhesives: as recommended by manufacturer.

B. Floor leveler: Thoro Trowel Grade Underlayment with Thoro Primer 800.

C. Moldings: vinyl; reducers, transitions, and edge guards.

PART 3 EXECUTION

3.01 EXAMINATION

A. Verify that substrate surface is smooth and flat with maximum variation of 1/8 inch in 10 ft and is ready to receive work.

B. Verify concrete floors are dry to maximum moisture content of 7 percent; and exhibit negative alkalinity, carbonization, or dusting.

C. Examine carpet; notify Architect of any variation in color within or between rolls.

D. Beginning of installation means acceptance of substrate and site conditions.

3.02 PREPARATION

A. Remove sub-floor ridges and bumps. Fill low spots, cracks, joints, holes, and other defects with sub-floor filler.

B. Apply, trowel, and float filler to leave smooth, flat, and hard surface.

C. Prohibit traffic until filler is cured.

D. Vacuum floor surface.

3.03 INSTALLATION

A. Apply carpet and adhesive in accordance with manufacturers' instructions.

B. Lay out rolls of carpet.

C. Double cut carpet, to allow intended seam and pattern match. Make cuts straight, true, and unfrayed. Edge seam carpet at public areas.

D. Locate seams in area of least traffic.

E. Fit seams straight, not crowded or peaked, free of gaps.

F. Lay carpet on floors with run of pile in same direction as anticipated traffic.

G. Do not change run of pile in any room where carpet is continuous through a wall opening into another room. Locate change of color or pattern between rooms under door centerline.

H. Cut and fit carpet around interruptions.

I. Fit carpet tight to intersection with vertical surfaces without gaps.

3.04 CLEANING

A. Remove access adhesive from floor, base, and wall surfaces without damage.

B. Clean and vacuum carpet surfaces.

END OF SECTION

SECTION 0□□00
PAINTING

PART 1 GENERAL

1.01 SECTION INCLUDES

A. Paint, Primer, Sealers for Interior and Exterior Applications

B. Wood Finishing

1.02 COORDINATION

C. All shop primed metal items (door, door and window frames, metal fabrications, manufactured items) shall be field painted, verify which materials are pre-finished and which are shop primed. Coordinate finishing.

D. Refer to schedules and drawings for painting materials notes.

E. Request color schedule from Architect indicating major building areas, components and paint color.

F. Assume ten percent (10%) of wall area should be an accent color

G. Assume that all hollow metal frames will be an accent color

1.03 REGULATORY REQUIREMENTS

A. All products used shall VOC compliant.

1.04 SUBMITTALS

A. Submit information indicated in the selected interior finishes table.

B. Indicate various materials, styles where applicable and sub contractor.

C. Color selections will be made from submitted information

D. Submit paint schedule, provide manufacturer's product data for all materials to be used and list building areas and proposed paint materials.

1.05 PROJECT RECORD DOCUMENTS

A. Maintain and submit project record documents for paint bases and tinting used throughout project under provisions of the General Requirements.

1.06 OPERATION AND MAINTENANCE DATA

A. Submit cleaning and maintenance data under provisions of the General Requirements.

PART 2 PRODUCTS

2.01 PAINTS, PRIMERS, SEALERS AND FILLERS

A. Manufacturer: Sherwin Williams Co., 101 Prospect Ave. N.W., Cleveland, OH 44101, (800) 321-8194.

B. Scheduled Paints

1. P-1: (interior walls) 1 ct. PrepRite 200 Latex Primer, 2 cts. ProMar 200 Latex Low Sheen ES, colors P-1A, P-1B, P-1C as selected by Architect.
2. P-2: (office ceilings)1 ct. PrepRite 200 Latex Primer, 2 cts. ProMar 200 Latex Flat, ceiling white
3. EP-1: (over shop primed metals)
   a. Interior: 2 cts. ProClassic Waterborne Acrylic Satin, colors as selected by Architect
   b. Exterior: 2 cts. A-100 Exterior Latex Satin, colors as selected by Architect
4. EP-2: (masonry walls) 1ct. PrepRite Masonry Primer or PrepRite 200 Latex Primer, 2 cts. ProClassic Int. Alkyd Satin, colors EP-2A, EP-2B, EP-2C as selected by Architect.
5. EP-3: (masonry base) 1ct. PrepRite Masonry Primer or PrepRite 200 Latex Primer, 2 cts. ProClassic Int. Alkyd Satin
6. EP-4: (concrete ceiling) 1ct. PrepRite Masonry Primer or PrepRite 200 Latex Primer, 2 cts. ProClassic Int. Alkyd Satin

C. Floor Finish

1. EF-1: 3 cts. ArmorSeal Floor-Plex 7100 Finish, color as selected by Architect

D. Exterior Paint:

1. Metal: 2 cts. A-100 Exterior Latex Satin, color as selected by Architect

2.02 PAINT SYSTEMS

A. All paint materials shall be appropriate for substrate and topcoat material.

B. Painting shall be done in one primer coat (primer/sealer for gypsum board, primer/filler for concrete, concrete plank and concrete block) and two finish coats.

C. Painting shall include:

1. All exposed surfaces such as ceiling bulkheads, trim, plywood, column covers, walls, partitions, gypsum board ceilings, etc.
2. Exposed structure or 6’’ above suspended acoustical ceiling - prime full height, finish to exposed height, prime and paint prior to ceiling installation.
3. Hard ceilings - prime and paint exposed wall.
4. All furnished primed equipment/materials installed by others (doors, frames, furnishings, piping, conduit, boxes, etc.).

D. All materials shall be applied to wet/dry film thickness using methods recommended by manufacturer for substrate and materials used for moderate to sever wear conditions.

E. Interior finish materials shall conform to ASTM E84 Class I.

2.03 WOOD FINISH

A. Transparent Stain: Oil based transparent stain, color to be selected.

B. Finish: Catalyzed Polyurethane. Submit samples indicating sheen (flat, semi-gloss, gloss) for selection by Architect

PART 3 EXECUTION

3.01 INSPECTION

A. Verify that surfaces are ready to receive work as instructed by the product manufacturer.

B. Examine surfaces scheduled to be finished prior to commencement of work. Report any condition that may potentially affect proper application.

C. Measure moisture content of surfaces using an electronic moisture meter. Do not apply finishes unless moisture content meets the recommendations of the manufacturer.

D. Beginning of installation means acceptance of existing surfaces.

3.02 PREPARATION

A. Remove electrical plates, hardware, light fixture trim, and fittings prior to preparing surfaces or finishing.

B. Correct minor defects and clean surfaces which affect work of this Section.

C. Verify with security sealant manufacturer that paint is suitably compatible with security sealant. Where paint may interfere with adhesion of security sealant mask joints neatly prior to painting.

D. Shellac and seal marks which may bleed through surface finishes.

E. Impervious Surfaces: Remove mildew by scrubbing with solution of tri-sodium phosphate and bleach. Rinse with clean water and allow surface to dry.

F. Stucco - surface must be clean and dry, temperature must be 50 F or above, pitch streaks shall be scrapped, sanded, and spot primed before full priming.

G. Concrete Block - surface must be free of dirt, loose or excess mortar and thoroughly dry. Allow new block construction to dry 30 days minimum before painting.

H. Poured Concrete - surface must be cleaned of all grease, dirt, oil, laitance, efflorescence and loose mortar and cement. Maximum moisture content shall be 15%. Allow newly poured concrete to cure 30-60 days before painting. Temperature of Air concrete and materials must be maintained above 55 F for 24 hours before, during, and after painting.

I. Aluminum - surface must be cleaned of all oil, grease, dirt, and oxide by wiping, etching, scrubbing, steam cleaning, or solvent cleaning.

J. Galvanized Metal - surface should be weathered a minimum of 6 months then solvent or blast cleaned of all dirt, oils, and mill scale.

K. Misc. Iron/Steel - surface must be cleaned of all oil, grease, mill scale, dirt, foreign matter, rust using solvent or blast methods.

L. Wood (Exterior) - surface must be clean and dry to maximum 12% moisture content. No painting shall be done immediately after rain, during fog, or when temperature is below 50 F.

M. Wood (Interior) - all surfaces shall be sanded smooth with the grain. Surface blemishes shall be corrected. The room shall be cleaned of dust. Lightly sand between coats.

N. Gypsum Board - surface must be clean, dry, and free of dust.

3.03 PROTECTION

A. Protect elements surrounding the work of this Section from damage or disfigurement.

B. Repair damage to other surfaces caused by work of this Section.

C. Furnish drop cloths, shields, and protective methods to prevent spray or dropping from disfiguring other surfaces.

D. Remove empty paint containers from site.

3.04 APPLICATION

A. Apply products in accordance with manufacturer's instructions.

B. Do not apply finishes to surfaces that are not dry.

C. Apply one primer coat and two finish coats.

D. Apply each coat to uniform finish.

E. Sand lightly between coats to achieve required finish.

F. Allow applied coat to dry before next coat is applied.

G. Where clear finishes are required, tint fillers to match stained wood. Apply filler prior to finish coat.

H. Prime back surfaces of interior and exterior woodwork with primer paint.

I. Prime back surfaces of interior woodwork scheduled to receive stain or varnish finish with gloss varnish reduced 25 percent with mineral spirits.

J. After security sealant is installed return to cut in finish paint to edge of sealant where materials remain exposed.

3.05 FINISHING MECHANICAL AND ELECTRICAL EQUIPMENT

A. Paint unfinished equipment.

B. Remove unfinished louvers, grilles, covers, and access panels on mechanical and electrical components and paint separately.

C. Prime and paint insulated and exposed pipes, conduit, boxes, insulated and exposed ducts, hangers, brackets, collars and supports, except where items are pre-finished.

D. Replace identification markings on mechanical or electrical equipment if painted over.

E. Paint interior surfaces of air ducts, and convector and baseboard heating cabinets that are visible through grilles and louvers with one coat of flat black paint, to limit of sight line. Paint dampers exposed behind louvers, grilles, and convector and baseboard cabinets to match face panels.

F. Paint exposed conduit and electrical equipment occurring in finished areas.

G. Paint exposed fire sprinkler lines located in finished areas. Verify locations with A/E

H. Paint both sides and edges of plywood backboards for electrical and telephone equipment before installing equipment.

I. Replace electrical plates, hardware, light fixture trim, and fittings removed prior to finishing.

3.06 CLEANING

A. As Work proceeds, promptly remove paint where spilled, splashed, or spattered.

B. Collect cotton waste, cloths, and material which may constitute a fire hazard, place in closed metal containers and remove daily from site.

C. During progress of Work, maintain premises free of unnecessary accumulation of tools, equipment, surplus materials, and debris.

END OF SECTION

SECTION 0□□55
WALLCOVERINGS

PART 1 GENERAL

1.01 WORK INCLUDED

A. Acoustic wallcovering

1.02 RELATED WORK

A. All parts of the Contract Documents relate to the Work specified in this section.

1.03 REGULATORY REQUIREMENTS

A. Conform to applicable code for flame/fuel/smoke ratings.

1.04 DELIVERY, STORAGE, AND HANDLING

A. Deliver products to site under provisions of Section 01600.

B. Store and protect products under provisions of Section 01600.

C. Inspect roll materials on site to verify acceptance.

D. Protect packaged adhesive from temperature cycling and cold temperatures.

E. Do not store roll goods on end.

1.05 ENVIRONMENTAL REQUIREMENTS

A. Provide continuous ventilation and heating facilities to maintain substrate surface and ambient temperatures above 60 degrees F unless required otherwise by manufacturer's instructions.

B. Do not apply adhesive when substrate surface temperature or ambient temperature is below 60 degrees F or relative humidity is above 40 percent.

C. Maintain these conditions 24 hours before, during, and after installation of adhesive wall covering.

PART 2 PRODUCTS

2.01 WALLCOVERING MATERIALS

A. Acoustic wallcovering manufacturer:

1. Ozite RIB distributed by Contract Wallcoverings , Inc. 2786 Industrial Row Drive, Troy, MI 48084 (800) 227-2277.
2. Fashion Acousticals- Whisper Plus manufactured by Fashion Wallcoverings, 2040 W. 110th, Cleveland, OH 44102, (216) 631-6700.

B. Acoustic wallcoverings, class A, NRC .60, rib textured:

1. AWC-1: color as selected by Architect
2. AWC-2: color as selected by Architect

PART 3 EXECUTION

3.01 INSPECTION

A. Verify that substrate surfaces are prime painted and ready to receive work, and conform to requirements of the wall covering manufacturer.

B. Verify flatness tolerance of surfaces does not vary more than 1/8 inch in 10 feet nor vary at a rate greater than 1/16 inch/ft.

C. Beginning of installation means acceptance of existing surfaces.

3.02 PREPARATION

A. Fill cracks and smooth irregularities with filler; sand smooth.

B. Wash surfaces with trisodium phosphate, rinse and neutralize; wipe dry.

C. Sand glossy surfaces. Shellac marks which may bleed.

D. Remove electrical, telephone, wall plates and covers.

E. Vacuum clean surfaces free of loose particles.

3.03 INSTALLATION

A. Apply adhesive and wall covering in accordance with manufacturer's instructions.

B. Apply adhesive immediately prior to application of wall covering.

C. Razor trim edges on flat work table. Do not razor cut on gypsum board surfaces.

D. Apply wall covering smooth, without wrinkles, gaps or overlaps. Eliminate air pockets and ensure full bond to substrate surface. Butt edges tight.

E. Horizontal seams are not acceptable.

F. Do not seam within 2 inches of internal corners or within 6 inches of external corners.

G. Install wall covering before installation of bases, hardware, or items attached to or spaced slightly from wall surface. Do not install wall covering more than 1/4 inch below top of resilient base.

H. Remove excess wet adhesive from seam before proceeding to next wall covering sheet. Wipe clean with dry cloth.

3.04 CLEANING

A. Clean wall coverings of excess adhesive, dust, dirt, and other contaminants.

B. Replace wall plates and accessories removed prior to work of this Section.

END OF SECTION

SECTION 10115
MARKERBOARDS AND DISPLAY CABINET

PART 1 GENERAL

1.01 WORK INCLUDED

A. Porcelain enamel Markerboard

B. Tack Board

C. Display Cabinet

1.02 RELATED SECTIONS

A. Section 06100 Rough Carpentry

1.03 SUBMITTALS

A. Shop Drawings:

1. Provide shop drawings for each type of 2044 bulletin board cabinet required.
2. Provide shop drawings for each type of tackable or visual display board required

B. Product Data: Provide technical data for materials specified. Include Material Safety Data Sheets, when applicable.

C. Samples:

1. Manufacturer's color charts
2. Composition samples of material and trim to illustrate finish, color and texture

1.04 MAINTENANCE DATA

A. Submit maintenance data under provisions of Section 01700.

B. Include data on regular cleaning, stain removal, and precautions

1.05 WARRANTY

A. Provide warranty under provisions of Section 01700.

B. Submit a standard warranty, stating when installed in accordance with manufacturer's instructions and recommendations, Claridge are guaranteed for one year against defects in materials and workmanship. Guarantee does not cover normal wear and tear, improper handling, any misuse, or any defects caused by vandalism or subsequent abuse. Guarantee covers replacement of defective material but does not include cost of removal or reinstallation

C. Submit a "Life of the Building" warranty, stating that under normal usage and maintenance, and when installed in accordance with manufacturer's instructions and recommendations, Claridge porcelain enamel LCS markerboards are guaranteed for the life of the building. Guarantee covers replacement of defective boards but does not include cost of removal or reinstallation

PART 2 PRODUCTS

2.01 MARKERBOARDS

A. Manufacturer: Claridge Products and Equipment, Inc., Harrison, Arkansas 72602-0910; Phone: 870-743-2200; Fax: 870-743-1908

B. Markerboards: Claridge Factory-Built Markerboards

1. Face Sheet: 24 gauge LCS Markerboard
2. Core Material: 7/16" MDF
3. Panel Backing: 0.002" Aluminum Foil Panel
4. Series: 4
5. Trim Finish: Satin Anodize Aluminum
6. Typical Arrangement: Type A
7. Panel Size: 16’ wide x 4’ high
8. Panel Color: No. 32 LCS White
9. Accessories:
   a. Chalktrough - Standard continuous solid type aluminum tray with ribbed section and injection molded end closures at bottom of each markerboard
   b. Map Rail - Standard continuous 1" map rail with cork insert and end stops at the top of each markerboard

2.02 TACK BOARDS

A. Manufacturer: Claridge Products and Equipment, Inc., Harrison, Arkansas 72602-0910; Phone: 870-743-2200; Fax: 870-743-1908

B. Tack Boards: Claridge Factory-Built Markerboards

1. Series: 4
2. Trim Finish: Satin Anodize Aluminum
3. Typical Arrangement: Type CO
4. Panel Size: 30” inches wide x 4’ high
5. Panel Color: Designer series fabric

2.03 DISPLAY CABINET

A. Manufacturer: Claridge Products and Equipment, Inc., Harrison, Arkansas 72602-0910; Phone: 870-743-2200; Fax: 870-743-1908

B. Model 2044 Contemporary bulletin board cabinet 4’ x 6’ x 3” deep surface mount with designer series fabric on cork underlay tackable back panel, satin aluminum finish.

PART 3 EXECUTION

3.01 EXAMINATION

A. Examine substrate and surrounding area under provisions of Section 01040.

3.02 INSTALLATION

A. Install products in accordance with manufacturer's instructions.

B. Secure units level and plumb.

C. Deliver factory built units completely assembled and of dimensions shown in details and in accordance with manufacturer's shop drawings as approved by the architect.

D. Follow manufacturer's instructions for storage and handling of units before installation.

E. Do not install boards on damp walls or in damp and humid weather without heat in the building.

F. Install level and plumb, keeping perimeter trim straight in accordance with manufacturer's recommendations.

3.03 CLEANING AND ADJUSTING

A. Verify that all accessories are installed as required for each unit

B. Clean product surfaces in accordance with manufacturer's instructions, clean glass surfaces, back panels and trim in accordance with manufacturer's recommendations, leaving all materials ready for use.

END OF SECTION

SECTION 10150
TOILET AND SHOWER PARTITIONS

PART 1 GENERAL

1.01 SECTION INCLUDES

A. Metal toilet partition

B. Solid plastic shower partitions

1.02 RELATED SECTIONS

A. Section 10800 Toilet and Bath Accessories

1.03 REFERENCES

A. ADA Accessibility Guidelines for Buildings and Facilities

B. Michigan Barrier Free Design Law.

1.04 COORDINATION

A. Coordinate for installation of wood blocking at all location where system is fastened to walls.

1.05 SUBMITTALS

A. Submit compartment plan shop drawings and product data.

B. Submit color chips from manufacturer's standard range for selection of finish.

1.06 OPERATION AND MAINTENANCE DATA

A. Submit cleaning and maintenance data under provisions of Section 01700.

PART 2 PRODUCTS

2.01 SOLID PLASTIC PARTITION SYSTEM

A. Comply with provisions of ADA where applicable and configured as shown on drawings

B. Panels: 1" thick x 55 inch minimum height polymer panels, color as selected by Architect from manufacturer's full range of colors.

C. Pilasters: 1 1/4" polymer panel with jack leveling, stainless steel shoe, color to match panels.

D. Hardware and brackets: aluminum or stainless steel, provide all necessary components, partial list of specific requirements follows:

1. Hinges: gravity swing to near closed position, ADA compliant design.
2. Latch: ADA compliant design.
3. Coat hooks and bumpers: 2 hooks (at 48" and 68" A.F.F.) with separate door bumper

2.02 METAL PARTITION SYSTEM

A. Comply with provisions of ADA where applicable and configured as shown on drawings, floor mounted overhead braced.

B. Manufacturers:

1. Hadrian
2. Metpar
3. Bobrick
4. Bradley

C. Panels: 1" thick x 58 inch minimum panel height, two (2) 22 gage minimum face sheets, laminated under pressure to honeycomb core, galvanized bonderized steel with powder coat finish, color as selected by Architect from manufacturer's full range of colors.

D. Pilasters: 1 1/4", two (2) 22 gage minimum face sheets, laminated under pressure to honeycomb core, galvanized bonderized steel with powder coat finish, jack leveling, stainless steel shoe, color to match panels.

E. Headrail: Aluminum , anti-grip design

F. Hardware and brackets: aluminum or stainless steel, provide all necessary components, partial list of specific requirements follows:

1. Hinges: gravity swing to near closed position, ADA compliant design.
2. Latch: ADA compliant design.
3. Coat hooks and bumpers: 2 hooks at barrier free stalls (at 48" and 68" A.F.F.) with separate door bumper, 1 combination hook bumper at in swing non-barrier free stalls.

PART 3 EXECUTION

3.01 EXAMINATION

A. Verify that adjacent work is complete and ready to receive work.

B. Verify field measurements are as shown on Drawings.

C. Coordinate with appropriate trades for correctly locating anchorage, bracing, and blocking.

D. Beginning of installation means installer accepts existing conditions.

3.02 ERECTION

A. Erect in accordance with manufacturer's instructions.

B. Install partition components secure, plumb and level.

C. Attach panel brackets securely to walls and floors using appropriate anchor devices.

D. Attach panels and pilasters to brackets with through bolts and nuts. Locate headrail joints at pilaster center line.

E. Provide 1/2 inch space between wall surface and panels or pilasters.

F. Provide for adjustment of floor variations with screw jack through steel saddles integral with pilaster. Conceal floor fastenings with pilaster shoes.

3.03 ADJUSTING

A. Adjust work under provisions of General Conditions.

B. Adjust and align door hardware to uniform clearance at vertical edges of doors. Clearance space not to exceed 3/16 inch.

C. Adjust door hinges so that free movement is attained and will locate return doors to near closed position.

3.04 CLEANING

A. Clean work under provisions of General Conditions.

B. Remove protective coverings and clean surfaces and hardware.

3.05 PROTECTION OF FINISHED WORK

A. Protect finished installation under provisions of General Requirements.

B. Field touch-up of finished surfaces will not be permitted. Replace damaged components.

END OF SECTION

SECTION 10440
SIGNAGE

PART 1 GENERAL

1.01 SECTION INCLUDES

A. Interior signs for code compliance.

B. Site signage

1.02 REFERENCES

A. ADA - Vol. 56, No 144.

B. Michigan Department of Labor Building Code Rules, 1996

C. BOCA National Building Code,1996 Edition

D. CABO/ANSI A117.1 - 1992.

1.03 REGULATORY REQUIREMENTS

A. Comply with requirements of all applicable codes for design, fabrication, location, and installation of signage.

1.04 SUBMITTALS

A. Submit signage shop drawings, product data, schedule, and color samples under provisions of General Conditions.

1.05 DELIVERY, STORAGE, AND HANDLING

A. Deliver, store and protect products under provisions of General Conditions.

PART 2 PRODUCTS

2.01 INTERIOR SIGN MATERIALS

A. Signs: Frameless, plastic, letters and numbers raised 1/32", uppercase, helvetica medium, 5/8 inch high minimum, 2 inches high maximum; Grade II Braille.

B. Colors: text/graphic and background colors having contrast as required by code and as approved by Architect from manufacturer’s standard colors.

C. Mounting Hardware: Concealed attachment.

D. Tape Adhesive: Double sided tape, permanent adhesive.

E. Signs: Accessible toilet room signs containing lettering and Braille with the international symbol of accessibility. Provide men and women signs, 9" x 6" sign. Provide 1 at each door, see door schedule for additional information.

PART 3 EXECUTION

3.06 EXAMINATION

A. Examine substrate under provisions of General Conditions.

3.07 INSTALLATION

A. Install in accordance with manufacturer's instructions and ADA requirements.

B. Install interior signs centered at 60 inches above finish floor line.

C. Install signs after surfaces are finished, in locations as directed.

D. Clean and polish.

END OF SECTION

SECTION 10500
METAL LOCKERS

PART 1 GENERAL

1.01 WORK INCLUDED

A. Metal Lockers

B. Benches

1.02 RELATED WORK

A. All parts of the Contract Documents relate to the Work specified in this section.

1.03 SUBMITTALS

A. Submit locker shop drawings and product data under provisions of General Conditions.

B. Submit color samples from manufacturer's standard range for selection of finish.

1.04 OPERATION AND MAINTENANCE DATA

A. Submit cleaning and maintenance data under provisions of General Conditions.

1.05 COORDINATION

A. Provide barrier free lockers at best accessible locations. Provide quantity required at each area of lockers to comply with requirements of ADA.

B. Coordinate numbering with Owner, coordinate with existing locker numbering system.

PART 2 PRODUCTS

2.01 METAL LOCKERS

A. Locker Units: Fabricated from mild cold-rolled steel, of the following minimum thickness:

1. Body, Shelf: 24 gage.
2. Doors: 16 gage.
3. Door Frames: 16 gage.
4. Base, Top, Trim: 20 gage.

B. Size and configuration:

1. 12"w x 18"d x 72"h, single tier

C. Hinges: 2 inches minimum, 5 knuckle, minimum 3 per door full lockers

D. Hooks: two single prongs at side, one double prong at ceiling.

E. Base: framed pressure treated 2x4 lumber at 24” o.c. with ¾” pressure treated plywood top

F. Top: sloped.

G. Handle: recessed handle

H. Locks: combination lock with master key override

I. Number plate: polished aluminum, black painted numbers.

J. Barrier Free Locker: Provide lockers with a shelf at 15" and hooks at 48" above finished floor, locker handle shall comply with the requirements of ADA for both location and operation, provide decal containing the international symbol of accessibility on the door, locate lockers where indicated on Drawings.

K. Fabrication:

1. Bodies: Formed and flanged with stiffener ribs as required, site erected.
2. Door Frame: Formed channel shape, welded and ground flush.
3. Doors: Flush face, reinforced at hinge and lock sides; top and bottom return flange. Finish edges smooth.
4. Provide number plate riveted to door.
5. Provide end and filler panels, and sloped tops to close off all openings.

L. Finish: Manufacturer pre-finished, color as selected from manufacturer's standard colors.

2.02 BENCHES

A. Base: moveable mounting, nominal 18" high, finish matching lockers selected by Architect.

B. Top 9 1/2" x 5/4 hardwood, 5 feet long, 2 coats clear finish

PART 3 EXECUTION

3.08 INSTALLATION

A. Install lockers as instructed by manufacturer.

B. Anchor bases with appropriate anchor devices to suit materials encountered.

C. Install lockers secure, plumb, square, and in line. Install lockers to avoid racking and so that door seals uniformly around entire perimeter.

D. Anchor lockers with appropriate anchor devices as recommended by manufacturer.

E. Bolt adjoining locker units together to provide rigid installation.

F. Install end panels, filler panels, sloped tops, and bases to completely close off openings.

END OF SECTION

SECTION 10520
FIRE EXTINGUISHERS AND CABINETS

PART 1 GENERAL

1.01 WORK INCLUDED

A. Fire extinguishers.

B. Fire extinguishers cabinets.

1.02 RELATED WORK

A. All parts of the Contract Documents relate to the Work specified in this section.

1.03 SUBMITTALS

A. Submit product data under provisions of Section 01340.

B. Include physical dimensions, operational features, color and finish.

1.04 OPERATION AND MAINTENANCE DATA

A. Submit manufacturer's operation and maintenance data under provisions of Section 01700.

B. Include test, refill or recharge schedules, procedures, and re-certification requirements, including requirements applicable to the Work.

1.05 ENVIRONMENTAL REQUIREMENTS

A. Do not install extinguishers when ambient temperatures may cause freezing.

1.06 COORDINATION

A. Coordinate cabinet mounting style for construction of wall at cabinet location.

PART 2 PRODUCTS

2.03 EXTINGUISHERS

A. Multi-purpose 2A-10BC, 5 lb. canister fire extinguishers, select from the following manufacturers:

6. 3005 - Potter-Roemer fire Protection Div., 16833 Edwards Road, Cerritos, CA 90701, (310) 404-3753
7. Larsen's Manufacturing Company, 7421 Commerce Lane N.E., Minneapolis, MN 55432, (612) 571-1181
8. J.L. Industries, 4450 W. 78th Street Circle, Bloomington, MN 55435, (612) 835-6850

2.04 FIRE EXTINGUISHER CABINETS

A. Recessed 4 3/8 inch deep wall, clear anodized aluminum door and frame, satin finish, painted steel cabinets for non-rated locations, vertical narrow light style door, double strength glass, with bracket select from the following manufacturers:

9. 7010-DV-11 - Potter-Roemer fire Protection Div., 16833 Edwards Road, Cerritos, CA 90701, (310) 404-3753
10. J.L. Industries, 4450 W. 78th Street Circle, Bloomington, MN 55435, (612) 835-6850
11. Larsen's Manufacturing Company, 7421 Commerce Lane N.E., Minneapolis, MN 55432, (612) 571-1181

2.05 FIRE EXTINGUISHER BRACKETS

A. Wall mounting bracket with retaining straps, select from the following:

1. 3901 - Potter-Roemer, Fire Protection Div., 16833 Edwards Road, Cerritos, CA 90701, (310) 404-3753
2. J.L. Industries, 4450 W. 78th Street Circle, Bloomington, MN 55435, (612) 835-6850.
3. Larsen's Manufacturing Company, 7421 Commerce Lane N.E., Minneapolis, MN 55432, (612) 571-1181.

PART 3 EXECUTION

3.01 INSPECTION

A. Verify size, number, type and location of fire extinguishers with fire official. Verify cabinet or surface mounting of extinguishers not shown on drawings with A/E.

B. Verify rough openings for cabinet are correctly sized and located.

C. Beginning of installation means acceptance of existing conditions.

3.02 INSTALLATION

A. Install cabinets plumb and level in wall openings 36 inches from finished floor to inside bottom of cabinet.

B. Secure rigidly in place, in accordance with manufacturer's instructions.

END OF SECTION

SECTION 10800
TOILET AND SHOWER ACCESSORIES

PART 1 GENERAL

1.01 SECTION INCLUDES

A. Toilet Accessories

B. Shower Accessories

1.02 REFERENCES

A. ADA Accessibility Guidelines for Buildings and Facilities

1.03 COORDINATION

A. Coordinate with Owner for installation of Owner provided accessories. Coordinate to provide required blocking and other preparations at the time walls are constructed

B. Assist Owner in determining the required number and sizes of Owner provided items.

1.04 SUBMITTALS

A. Submit toilet and bath accessories schedule shop drawings and product under provisions of General Requirements

B. Submit schedule listing room name and number, for each room list products by name and product number, provide product data for each item provided.

C. For each product scheduled and not specifically listed below provide cross reference chart indicating product listed below and the proposed substitution.

1.05 OPERATION AND MAINTENANCE DATA

A. Submit operation and maintenance data under provisions of General Requirements

PART 2 PRODUCTS

2.01 MANUFACTURERS

A. Bradley Corporation Washroom Accessories Division, P.O. Box 309, W142 N9101 Fountain Blvd., Menomonee Falls, WI 53051, (414) 354-8327.

2.02 OTHER MANUFACTURERS

A. American Specialties, Inc., 441 Saw Mill River Rd. Yonkers, NY 10701, (914) 476-9000.

B. Bobrick Washroom Equipment, Inc., 11611 Hart Street, North Hollywood, CA 91605, (818) 764-1000.

C. General Accessory Manufacturing Co., One Gamco Place, Durant, OK 74701, (800) 451-5766.

2.03 STANDARD PRODUCTS

A. Products listed using Bradley Product Number for other manufacturers submit cross reference and product information

B. Standard Accessories

1. Toilet tissue dispenser: 5234 double roll
2. Liquid soap dispenser: 6531 Toilet paper dispenser: 5234 double roll
3. Framed mirror unit: 781-2436
4. Grab bars: 812-001 x 42
5. Grab Bars: 812-001 x 18
6. Grab Bars: 812-001 x 36
7. Robe hooks: 9124
8. Napkin disposal – 2 sided: 4721-15
9. Napkin disposal – 1 sided: 4722-10-15
10. Shower rod and curtain: 9539-75, 9537-72x72, (13) 9540
11. Full length mirror: 747-24”w x 72”h
12. Electric Hand Dryer: Excel Dryer, Inc. – Xlerator-Model XL-SB
13. Shower grab bar unit – refer to drawings
14. Baby changing station: 962-11 Surface mounted.
15. Paper Towel Dispenser – Public: 234
16. Paper Towel Dispenser – Staff:2291

PART 3 EXECUTION

3.01 COORDINATION

A. Coordinate with work of Section 09250 for installation of required blocking, anchors and recessed products in stud wall construction.

B. Coordinate with Owner to obtain Owner provided items.

3.02 EXAMINATION

A. Examine substrate and openings under provisions of General Requirements

3.03 PREPARATION

A. Deliver inserts and rough-in frames to site at appropriate time to be built-in.

B. Provide templates and rough-in measurements as required.

C. Verify exact location of accessories for installation.

D. Coordinate blocking installation with work of Section 06100.

3.04 INSTALLATION

A. Install Owner supplied and Contractor supplied products.

B. Install fixtures, accessories and items in accordance with manufacturers' instructions.

C. Install products in accordance with requirements of state and local building codes and the Americans with Disabilities Act (ADA).

D. Install products where indicated in Drawings.

E. Install plumb and level, securely and rigidly anchored to substrate.

END OF SECTION

SECTION 10□00
HAT AND COAT RACKS

PART 1 GENERAL

1.01 WORK INCLUDED

A. Hat and coat racks.

1.02 SUBMITTALS

A. Submit shop drawings, schedule, and product data under provisions of the General Requirements.

B. Indicate number and locations of hat and coat racks; rack types and lengths; type and number of hangers; and finishes.

1.03 DELIVERY, STORAGE, AND HANDLING

A. Deliver, store and protect products under provisions of the General Requirements.

1.04 COORDINATION

A. Coordinate with appropriate trades for installation of necessary anchorage, bracing, and blocking at all required locations for product fastening.

PART 2 PRODUCTS

2.01 WALL HUNG RACK

A. Wall hung hat and coat rack with (4) hangers per linear foot. Select from the following:

1. Series 250, single shelf with hanger pole, bright chrome finish; Model 966 wire hanger as manufactured by Raymond Engineering Incorporated, 704 Vandalia St., St. Paul, MN 55114-1303, (800) 365-5770.
2. WH01A-AL, aluminum hanger style wall rack, anodized aluminum finish; MG17-PH molded open-hook hanger as manufactured by Magnuson Group, 1400 Internationale Parkway, Woodridge, IL 60517, (630) 783-8100.
3. R1 System, aluminum coat rack, satin finish; Model No. 17 wire hanger as manufactured by Emco Specialty Products, Inc., 408 Miami Avenue, Kansas City, KS 66105, (913) 281-4555.

PART 3 EXECUTION

3.01 EXAMINATION

A. Verify that surrounding work is complete, acceptable, and ready to receive work.

B. Do not install hat and coat racks until surrounding work has been completed and painting is finished and dry.

C. Verify field measurements are as shown on drawings.

D. Verify installation and correct location of required anchorage, bracing, and blocking.

E. Beginning of installation means installer accepts existing conditions.

3.02 INSTALLATION

A. Install and assemble in accordance with manufacturer's instructions.

B. Install standard height wall hung rack with shelf at 66 inches above floor and barrier free height rack with shelf at 48” above floor, secure, plumb, square, and level.

C. Anchor with appropriate anchor devices to suit materials encountered and as recommended by manufacturer.

END OF SECTION

SECTION 11132
PRO□ECTION SCREEN

PART 1 GENERAL

1.01 SECTION INCLUDES

A. Concealed in ceiling projection screen

1.02 COORDINATION

A. Coordinate with other trades for required structural support, power and control conduits, junction boxes wiring and with finish ceiling work.

B. Provide all work required or inform Construction Manager of required work to be provided by other trades.

1.03 DELIVERY AND HANDLING

A. Receive product at site in original packaging. Inspect for damage, notify shipper and manufacturer of any damage.

B. Do not install damaged product, coordinate replacement.

PART 2 PRODUCTS

2.01 PROJECTION SCREEN

A. Manufacturer: Da-Lite Screen Company, Inc., 3100 North Detroit Street, P.O. Box 137, Warsaw, IN 46581-0137, (800) 622-3737.

B. Model: Advantage Electrol projection screen, 50" (H) x 67"(W) Video Spectra 1.5 screen fabric

PART 3 EXECUTION

3.01 INSPECTION

A. Verify that all work required by others is in place, properly sized and ready for installation.

3.02 INSTALLATION

A. Install screen in ceiling in conjunction with suspended acoustical ceiling.

B. Connect power and controls, verify that all operations work properly.

C. Verify that screen travels smoothly, without binding or hanging. Adjust as necessary.

END OF SECTION

SECTION 111□0
DETENTION DOORS□WINDOWS AND HARDWARE

PART 1 GENERAL

1.01 SECTION INCLUDES

A. Detention hollow metal doors and frames

B. Detention hollow metal window frames

C. Detention glass

D. Hardware for detention door

1.02 RELATED SECTIONS

A. Section 08100 Metal Doors and Metal Frames.

B. Section 08700 Door Hardware

C. Section 17000 Facility Control and Communication Systems

1.03 REGULATORY REQUIREMENTS

A. Detention locks shall comply with applicable Federal, State and local laws, codes or ordinances.

B. Detention locks shall conform to applicable sections of the Life Safety Code NFPA-101, and National Electric Code NFPA-70.

C. Fire-rated openings shall comply with NFPA Standard No.80. Provide hardware tested and listed by Underwriter's Laboratories.

1.04 SUBMITTALS

A. Submit shop drawings including door and frame drawings, hardware schedule and product data, with glass and intercom product data. Submit shop drawings allowing 4 weeks for review from the date all information is received in Architect's office until the date shipped from the Architect's office.

B. Submit product data containing significant dimensions, clearances, power and wiring requirements and other information as required to make a full review.

C. Submit final detention hardware schedule signed by an Architectural Hardware Consultant certified by Door Hardware Institute.

D. Submit a complete keying schedule for pin tumbler locks prepared in accordance with the Door and Hardware Institutes manual "Keying Procedures, Systems and Nomenclature".

E. Submit a proposed keying schedule for paracentric and mogul locks. Indicate doors to room or section to be keyed alike.

F. Submit proof of compliance with test standards listed for products.

G. Submit glass samples for all glass types, thickness', and compositions. Submit minimum of one (1) 12" x 12" glass sample for each.

1.05 OPERATION AND MAINTENANCE

A. Provide operation and maintenance data, include cleaning methods and materials; operational instructions; owner servicing instructions, schedules, parts list and recommended lubrication; recommended maintenance schedule.

B. Provide inspections at three months intervals during warranty period. Inspect equipment function, adjustment, and lubrication, make necessary adjustments and lubrication.

C. Provide emergency service during warranty period. Response time shall be within 24 hours.

1.06 QUALITY ASSURANCE

A. The Detention Equipment Contractor shall provide all detention equipment as described in this section, and shall coordinate this equipment with his manufacturers, fabricators, installers, and with work by others. The Detention Equipment Contractor must address questions on the detention equipment and systems before being directed to the Construction Manager, Architect/Engineer or Owner. The Detention Equipment contractor shall be the single source of responsibility for this Work.

B. Acceptable Pre-qualified Detention Equipment Supplier/Installer:

1. Chief Industries, Inc., 1800 Raymond Drive, Grand Island, Nebraska 68803, (308) 389-7200
2. Cornerstone Detention Products, 1902 Central Pkwy SW, Suite G, Decatur, Alabama 35601, (256) 355-2396
3. CML Specialties, 1100 E Lakeshore Dr, Suite 300, Coeur D'Alene, Idaho 83814 (208) 765-2415
4. Maximum Security Products, 3 Schoolhouse Lane, Waterford, New York 12188 (518) 233-1800
5. G S Company, 7920 Stansbury Road, Baltimore, Maryland 21222 (410) 284-9549
6. Norment Security Group, 716 North 100 9th Street, Wauwatosa, WI 53326 (414) 453-8050
7. U.S, Security Systems, 156 Market Place, Montgomery, Alabama 36117 (334) 273-8778
8. McGregor Industries, Inc., 1736 East Cass Street, Joliet Illinois 60432 (815) 723-4296

C. The Detention Equipment Contractor shall be bondable for amount equal to 100% of his bid.

D. Manufacturer's Qualifications:

1. Manufacturers of detention equipment shall have not less than ten (10) years experience in the design and fabrication of detention equipment.
2. Manufacturers shall refer to five (5) other installations that are comparable in size and similar construction.

E. Installation and maintenance of the following equipment shall be performed by manufacturer approved personnel. Submit certification of manufacturer training with shop drawings.

1. Detention hollow metal doors and frames installers

2. Detention hardware installers

1.07 COORDINATION

A. Coordinate with glass, hardware, and security systems manufacturers for requirements that affect frames.

B. Coordinate with masonry and concrete contractors for built-in products and anchors.

C. Coordinate with Security and Controls Work and Electrical Work. Insure that conduit is provided for all hardware requiring control, communication or power.

D. Coordinate with Security and Controls Work for possible discrepancies, alert Architect to any problem or conflict prior to beginning of fabrication.

E. Coordinate with builder hardware contractor for non-detention hardware items required for detention doors that detention hardware contractor will not supply and builder hardware contractor shall supply. Coordinate all hardware with door and frame manufacturer.

F. Coordinate detention lock keying with Architect and Owner.

G. Verify all components in door assemblies comply with rating requirements notify Architect of possible conflicts prior to ordering components.

1.08 DELIVERY, STORAGE, AND HANDLING

A. Deliver products to site. Arrange for Freight Company to notify contractor 24 hours in advance of product arrival to site.

B. Deliver equipment to site in original shipping container, store and protect in manner to avoid damage to equipment until it can be installed.

C. Verify completeness of shipment and inspect equipment for damage. Report damage to manufacturer and/or shipper as required by purchase agreement. Owner will refuse scratched or damaged equipment.

1.09 WARRANTY

A. Warrant materials and workmanship for one (1) year after date of substantial completion. Repair or replace any defective detention materials or work when given written notice during Warranty period.

B. Manufacturer of detention hardware shall warrant that replacement parts for locking mechanisms shall be available for a minimum of twenty (20) years from date of equipment purchase.

1.10 TESTING AND ADJUSTING

A. Test and adjust doors and door hardware in conjunction with testing and adjusting of Facilities Control Systems.

B. Test each door for correct installation and fit, keying, and proper hardware operation.

PART 2 PRODUCTS

2.01 DOORS/FRAMES AND WINDOW FRAMES

A. Detention Steel Doors and Frames comply with:

1. ANSI/HMMA 863-98 - Specifications for Detention Security Hollow Metal Doors and Frames.
2. ASTM F-1450-97 Standard Test Methods for Hollow Metal Swinging Door Assemblies for Detention Facilities

2.02 DOORS/FRAMES AND WINDOW FRAMES FABRICATION

A. Fabricate doors and frames as a welded unit. Fabricate doors and frames to style as indicated in drawings.

B. Fabricate doors with channel web out for flush closer top and bottom of door.

C. Prepare frame for silencers. Provide three single rubber silencers for single doors on strike side, and two single silencers on frame head at double doors.

D. Fabricate frames with mortar boxes to accommodate installation of frame mounted locks, intercoms, power transfer hinges, and door position switches.

E. Provide 3/4-inch conduit between mortar boxes as required for wiring. Provide hole in mortar boxes for connection of conduits to control console. Coordinate with Electrical Work and Security and Controls Work for required conduit runs.

F. Fabricate frames with yoke anchors at the jambs and provide loose T anchors at sill.

G. Provide grouting holes in frames and field welded plugs for holes.

H. Attach fire rated label to each fire rated door and frame unit.

I. Coordinate with glass manufacturer for required glazing clearances for standard and detention glazing.

J. Fabricate Doors and Frames with removable glazing stops on least secure side of units.

K. Undercut doors 3/4 inch, undercut exterior doors with thresholds 3/8 inch.

2.03 FRAME ACCESSORIES

A. Document Pass: 1610-S manufactured by Creative Industries, 1024 Western Drive, Indianapolis, IN 46241, (317) 248-1102.

2.04 STEEL DOOR/FRAME AND WINDOW FRAME FINISHES

A. Interior Units: Shop primed.

B. Exterior Units: 0.60 oz/ sq ft galvanized, shop prime.

C. Finish: Field paint as specified in Section 09900 Painting.

D. Waterproof undercoat: Coal Coat Coal Tar Epoxy Coating, Pittsburgh Paint, One PPG Place, Pittsburgh PA 15272, (800) 441-9695 or as recommended by frame manufacturer for grouting frames solid.

2.05 DETENTION GLASS

A. Detention Glass standard: ASTM F-1592-95a and ASTM F-1915 Standard Test Methods for Detention Hollow Metal Vision Systems

B. Detention Glass: Glass clad laminate, manufactured by one of the following:

1. Sully North America, Inc., P.O. Box 70, Trumbauersville, PA 18970-0070, (215) 536-0333
2. Guardian Industries, Corp., 14600 Romine Road, Carleton, MI 48117, (800) 521-9040
3. Laminated Glass Corp., 375 E. Church Ave., Telford, PA 18969, (215)721-0400
4. Insulgard Corporation, 5133 Lawrence Place, Hyattsville, MD 20781, (800) 638-6718
5. Other manufacturer's submit product data and test reports.

C. Security Levels: drawings and schedules indicate security level of glass.

1. MIN: performing to H.P. White TP-0500.02 forced entry level I.
2. MED: performing to H.P. White TP-0500.02 forced entry level II or WMFL 30-minute physical attack.
3. MAX: performing to WMFL 60-minute physical attack.

D. Provide wire glass as part of glazing unit where indicated for wire on drawings, window schedules or door schedules.

E. Provide glass tested to UL752 level III (SPSA) where bullet resistant glass is scheduled

F. Provide Mirropane E.P. as manufactured by Libbey-Owens-Ford Co., Building Products, P.O. Box 799, 811 Madison Ave., Toledo, OH 43697-0799, 419-247-4721 as part of glazing unit where indicated for reflective on drawings, window schedules or door schedules.

2.06 DOOR HARDWARE

A. Detention Lock Standard: ASTM F-1577 Standard Test Methods for Detention Locks for Swinging Doors

B. Detention Hardware:

1. Hinges:

a. Door hinges: 204FM manufactured by Southern Steel Co., Div. Phelps Tointon Inc., 4634 S. Presa, P.O. Box 2021, San Antonio, TX
b. Food pass hinges: 203FP manufactured by Southern Steel Co., Div. Phelps Tointon Inc., 4634 S. Presa, P.O. Box 2021, San Antonio, TX

2. Locks:

a. Electric locks: 10120 24VDC manufactured by Southern Steel Co., Div. Phelps Tointon Inc., 4634 S. Presa, P.O. Box 2021, San Antonio, TX
b. Mechanical locks: 10500 series coordinate lock function with Owner manufactured by Southern Steel Co., Div. Phelps Tointon Inc., 4634 S. Presa, P.O. Box 2021, San Antonio, TX

c. Chase door lock: 1080A manufactured by Southern Steel Co., Div. Phelps Tointon Inc., 4634 S. Presa, P.O. Box 2021, San Antonio, TX
d. Food pass lock: 1017AM manufactured by Southern Steel Co., Div. Phelps Tointon Inc., 4634 S. Presa, P.O. Box 2021, San Antonio, TX

3. Pulls:

a. Raised pulls: 212 manufactured by Southern Steel Co., Div. Phelps Tointon Inc., 4634 S. Presa, P.O. Box 2021, San Antonio, TX
b. Flush pulls: 214 manufactured by Southern Steel Co., Div. Phelps Tointon Inc., 4634 S. Presa, P.O. Box 2021, San Antonio, TX

4. Door Position Switches: 220A manufactured by Southern Steel Co., Div. Phelps Tointon Inc., 4634 S. Presa, P.O. Box 2021, San Antonio, TX

C. Scheduled Detention Hardware Manufacturer:

1. Southern Steel Co., Div. Phelps Tointon Inc., 4634 S. Presa, P.O. Box 2021, San Antonio, TX

D. Other Detention Hardware Manufacturer:

1. Folger Adam Co., 16300 W. 103rd St., Lemont, IL 60439, (603)739-3900.
2. R.R. Brink Locking Systems Inc., 500 Earl Road, Shorewood, Il 60431, (815) 744-7000
3. Bronze Craft Corporation, 37 Will Street, P.O. Box 788, Nashua, NH 03061-0788, (603) 883-7747. Pulls, Hinges and Stops only.
4. Other manufacturer seeking acceptance shall submit proof of compliance with quality assurance, cross reference list with product data, and obtain acceptance prior to submitting bid.

E. Security Hardware Items:

1. Closers: as scheduled, manufactured by LCN Division, Ingersoll-Rand Co., P.O. Box 100, 121 W. Railroad Ave. Princeton, IL 61356-0100, (815) 875-3222.
2. Floor stops: Prison door stop #463, Rockwood Manufacturing Co., P.O. Box 79, 300 Main St., Rockwood, PA 15557, (800) 458-2424.

F. Additional Hardware Items Manufacturers as follows:

1. Weatherseals: 5050, National Guard Products, Inc, 4985 East Raines Rd., Memphis, TN 38118, (800) 647-7874.
2. Thresholds: 896, National Guard Products, Inc, 4985 East Raines Rd., Memphis, TN 38118, (800) 647-7874.

2.07 ADDITIONAL STOCK

A. Provide to Owner one (1) of each hand of each style door lock provided on project.

PART 3 EXECUTION

3.01 EXAMINATION

A. Verify that surfaces, openings, anchorage and rough-ins are in place, correctly sized and ready to receive work.

B. Verify that doors and frames are properly fabricated, that preps, and mortar boxes are correctly sized, located, and ready for installation.

C. Verify field measurements are as shown on shop drawings.

D. Verify that required conduits are installed, properly located, and ready for installation

E. Beginning of installation means installer accepts conditions.

3.02 COORDINATION

A. Coordinate with door and frame manufacturer to establish lead times for delivery. Should lead time require change in anchoring from masonry yokes to through bolt anchoring coordinate with manufacturer frames requiring these changes.

B. Coordinate with manufacturer grout hole locations.

C. Provide manufacturer with requirements for the detention glass and intercoms provided by selected manufacturers of those items.

D. Coordinate frame anchors, grout holes, glazing and intercom requirements prior to preparation of shop drawings so that this information is incorporated into the shop drawings.

3.03 PREPARATION

A. Protect elements surrounding the work of this Section and equipment from damage or disfigurement.

B. Provide equipment and anchoring devices to appropriate contractors with required templates.

C. Furnish setting drawings, diagrams, templates, instructions, and directions for installation. Distribute to other trades items required to be installed by other trades. Coordinate placement.

D. Protect inside throat of each frame for grouting solid with a waterproof undercoating material minimum 7 mil dry thickness. Or as required by frame manufacturer for grouting frames solid.

3.04 INSTALLATION

A. Do not install products that are observed to be defective.

B. Handle and install in accordance with manufacturer's instructions. For conditions where printed instructions are not available or do not apply consult with manufacturer's technical representative.

C. Install in alignment, free from warp, twist, or distortion, plumb level and true.

D. Build frames into masonry walls. Dowel anchors with a vertical reinforcing rod passing through a hole in the anchor.

E. Perform cutting, drilling, and fitting required for the installation complying with templates or detail drawings and project conditions.

F. Grind exposed site welds smooth and finish holes, defects and other imperfections so surfaces will be smooth when painted.

G. Metal assemblies to be set in concrete unit masonry shall be braced during installation.

H. Hardware mounting heights from finished floor shall comply with applicable codes.

3.05 ADJUSTING

A. Adjust, balance, and level equipment.

B. Verify equipment functions properly and that keying is correct. Make any corrections that are required.

C. Demonstrate equipment operations to Owner's personnel.

3.06 CLEANING

A. Clean equipment with recommended products and surrounding area of debris, packing materials and other soil that occurred through installation.

B. Remove non-permanent labels, non-permanent protective coatings, identifying marks, and foreign materials.

C. Clean concealed work prior to enclosure.

END OF SECTION

SECTION 111□5
DETENTION EQUIPMENT

PART 1 GENERAL

1.01 SECTION INCLUDES

A. Detention equipment and furnishings

1.02 SUBMITTALS

A. Submit shop drawings and rough-in plans indicating primary dimensions of equipment, location and type of required utilities, wiring diagrams and location and type of anchoring devices.

1.03 OPERATION AND MAINTENANCE

A. Provide operation and maintenance data, include cleaning methods and materials; operational instructions; owner servicing instructions, schedules, parts list and recommended lubrication; recommended maintenance schedule.

1.04 QUALITY ASSURANCE

A. Comply with AWS code for welding procedures including appearance and quality of welds and methods of weld correction.

B. Manufacturer shall maintain product liability insurance.

C. All engineering functions of the manufacturer shall be under the direction of a registered professional engineer.

1.05 COORDINATION

A. Coordinate with masonry and concrete contractors for built-in products and anchors.

B. Coordinate for delivery or field assembly of products too large for finished doorways.

1.06 DELIVERY, STORAGE, AND HANDLING

A. Deliver products to site. Arrange for freighting company to notify contractor 24 hours in advance of product arrival to site.

B. Deliver equipment to site in original shipping container, store and protect in manner to avoid damage to equipment until it can be installed.

C. Verify completeness of shipment and inspect equipment for damage. Report damage to manufacturer and/or shipper as required by purchase agreement. Owner will refuse scratched or damaged equipment.

D. Coordinate furnishing delivery with construction. Verify delivery route within building for adequate clearances. Deliver product to allow build around or for field-welded assembly and powder coat finishing.

1.07 WARRANTY

A. Warrant materials and workmanship for one (1) year after date of substantial completion. Repair or replace any defective detention materials or work when given written notice during Warranty period.

PART 2 PRODUCTS

2.01 DETENTION FURNISHING MANUFACTURERS

A. Bob Barker Company, Inc. – (800) 334-9880

2.02 DETENTION FURNISHING

A. Floor Mounted Bench: Barker Built, 48'' long, stainless steel finish, floor mounted, Item No. SS4B

B. Tilt Drawer Gun Locker: Barker Built, Powder coated finish, 4 compartment gun locker, Item No. TDGL4C.

2.03 ACCESSORIES

A. Anchors: HIT-RE 500 Epoxy Adhesive Anchoring System with threaded rod or threaded inserts as appropriate for installation.

B. All anchors – Tamper Resistant.

2.04 FINISHES

A. Furnishings: Steel components: factory primed, powder coated, colors as selected by Architect.

PART 3 EXECUTION

3.01 EXAMINATION

A. Verify that surfaces, openings, anchorage and rough-ins are in place, correctly sized and ready to receive work.

B. Verify field measurements are as shown on shop drawings.

C. Verify that required utilities are available, in proper locations, and ready for use.

D. Beginning of installation means installer accepts existing conditions.

3.02 PREPARATION

A. Protect elements surrounding the work of this Section and equipment from damage or disfigurement.

B. Provide equipment and anchoring devices to appropriate contractors with required templates.

C. Furnish setting drawings, diagrams, templates, instructions, and directions for installation. Distribute to other trades items required to be installed by other trades. Coordinate placement.

D. Locate and install epoxy anchors. Install anchors following manufacturer’s instruction, allow required set time.

3.03 INSTALLATION

A. Do not install products that are observed to be defective.

B. Handle and install in accordance with manufacturer's instructions. For conditions where printed instructions are not available or do not apply consult with manufacturer's technical representative.

C. Install in alignment, free from warp, twist, or distortion, plumb level and true.

D. Perform cutting, drilling, and fitting required for the installation complying with templates or detail drawings and project conditions.

E. Grind exposed site welds smooth and finish holes, defects and other imperfections so surfaces will be smooth when painted.

F. Metal assemblies to be set in concrete unit masonry shall be braced during installation.

G. Install security sealant and/or epoxy grout around frame edges.

H. Anchor bunks and desks to wall and floor, anchor tables and stools to floors, anchor pistol lockers to wall.

I. Use tamper resistant bolts or tack weld nuts to furnishing.

3.04 ADJUSTING

A. Adjust, balance, and level equipment.

B. Verify equipment functions properly and that keying is correct. Make any corrections that are required

C. Demonstrate equipment operations to Owner's personnel.

3.05 CLEANING

A. Clean equipment with recommended products and surrounding area of debris, packing materials and other soil that occurred through installation.

B. Remove non-permanent labels, non-permanent protective coatings, identifying marks, and foreign materials.

C. Clean concealed work prior to enclosure.

END OF SECTION

SECTION 12567
COURT ROOM BENCH SEATING

PART 1 GENERAL

1.01 SECTION INCLUDES

A. Wood Court Room Bench Seating

1.02 SUBMITTALS

A. Submit shop drawings including construction details, materials and color samples.

B. Submit product data.

1.03 OPERATION AND MAINTENANCE

A. Provide operation and maintenance data, include cleaning methods and materials; owner servicing instructions

1.04 DELIVERY, STORAGE, AND HANDLING

A. Deliver products to site. Arrange for Freight Company to notify contractor 24 hours in advance of product arrival to site.

B. Deliver equipment to site in original shipping container, store and protect in manner to avoid damage to equipment until it can be installed.

C. Verify completeness of shipment and inspect equipment for damage. Report damage to manufacturer and/or shipper as required by purchase agreement. Owner will refuse scratched or damaged equipment.

1.05 WARRANTY

A. Warrant materials and workmanship for two (2) year after date of substantial completion. Repair or replace any defective detention materials or work when given written notice during Warranty period.

PART 2 PRODUCTS

2.01 WOOD COURT ROOM BENCH SEATING

A. Hardwood veneer plywood or particle board construction, all exposed edges. Species and color to be selected by Architect.

B. Wood finish: Factory applied 20 mil vinyl.

C. Upholstery: Based on Sauder Manufacturing, Fabric upholstered seat and back over foam, all exposed edges covered, concealed fasteners. Fabric – Momentum, style Tangient or fabric of equal price grade, and color to be selected by Architect.

D. Construction: Tongue and groove joints, concealed fasteners. Refer to drawings for end profiles.

2.02 MANUFACTURERS

A. Sauder Manufacturing Co., 930 W. Barre Rd., Archbold, Oh 43502-0230, (419) 446-9384.

B. Kivett's Inc., 711 Southwest Blvd., Clinton, NC 28328, (910) 592-0161.

PART 3 EXECUTION

3.01 INSTALLATION

A. Do not install products that are observed to be defective.

B. Handle and install in accordance with manufacturer's instructions. For conditions where printed instructions are not available or do not apply consult with manufacturer's technical representative.

C. Install in alignment, free from warp, twist, or distortion, plumb level and true.

D. Verify work by others is complete and ready for installation.

E. Beginning of installation means installer accepts conditions.

F. Fasten to floor with manufacturer approved concealed fasteners.

3.02 PREPARATION

A. Protect elements surrounding the work of this Section and equipment from damage or disfigurement.

3.03 CLEANING

A. Clean equipment with recommended products and surrounding area of debris, packing materials and other soil that occurred through installation.

B. Remove non-permanent labels, non-permanent protective coatings, identifying marks, and foreign materials.

C. Protect installation from damage by other trades.

END OF SECTION

SECTION 13070
BULLET RESISTANT PROTECTION

PART 1 GENERAL

1.01 SECTION INCLUDES

A. Package Drawer

B. Transaction Window Units

1.02 SUBMITTALS

A. Submit shop drawings indicating primary dimensions of equipment, and location and type of anchoring devices.

B. Submit schedules; shop drawings including door and frame elevations; and product data for doors, door and window frames.

1.03 OPERATION AND MAINTENANCE

A. Provide maintenance data, include cleaning methods and materials.

1.04 COORDINATION

A. Coordinate with masonry contractor and gypsum board systems for installation of frames.

1.05 DELIVERY, STORAGE, AND HANDLING

A. Receive products at site in original shipping container, store and protect in manner to avoid damage to equipment until it can be installed.

B. Verify completeness of shipment and inspect equipment for damage. Report damage to manufacturer and/or shipper as required by purchase agreement. Owner will refuse scratched or damaged equipment.

1.06 WARRANTY

A. Guarantee materials and workmanship for one (1) year from date of substantial completion and owner occupancy under provisions of the General Requirements. Repair or replace any defective bullet-resistant materials or work when given written notice during warranty period.

B. Provide five (5) year manufacturer's warranty for bullet-resistant glass under provisions of the General Requirements. Warranty shall include coverage of sealed glass units from seal failure, inner pane dusting or misting, and replacement of same.

1.07 TESTING AND ADJUSTING

A. Test each door and window assembly for correct installation and fit, and proper hardware operation

PART 2 PRODUCTS

2.01 MANUFACTURED UNITS

A. Transaction Drawer: Model No. SS10D-D, ballistics level 2, manufactured by Armortex Safeguard Security Services, Ltd., 5926 Corridor Parkway, Schertz, TX 78154, (800) 880-8306

B. Transaction Window: Natural Voice Baffle System, Ballistics level 3, and document dip tray manufactured by Armortex Safeguard Security Services, Ltd., 5926 Corridor Parkway, Schertz, TX 78154, (800) 880-8306

C. Natural Voice Baffle Barrier: 3-sided hollow metal with 3 overlapping and offset glazing sheets manufactured unit and document dip tray in countertops manufactured by others as manufactured by Armortex Safeguard Security Services, Ltd., 5926 Corridor Parkway, Schertz, TX 78154, (800) 880-8306

D. Bullet Resistant Fiberglass: Armortex, level 2 prorecion boatd, Product No. O.F. 200 manufactured by Armortex Safeguard Security Services, Ltd., 5926 Corridor Parkway, Schertz, TX 78154, (800) 880-8306

2.02 GLAZING

A. Glazing: Acrylic glazing capable of withstanding 30 min attack

B. Provide cutouts and spacing hardware as shown and as required.

PART 3 EXECUTION

3.01 EXAMINATION

A. Verify that openings are correctly sized and ready to receive work.

B. Verify field measurements are as shown on shop drawings.

C. Beginning of installation means installer accepts existing conditions.

3.02 INSTALLATION

A. Do not install products which are observed to be defective.

B. Handle and install in accordance with manufacturer's instructions. For conditions where printed instructions are not available or do not apply consult with manufacturer's technical representative.

C. Install in alignment, free from warp, twist, or distortion, plumb level and true.

D. Perform cutting, drilling, and fitting required for the installation complying with templates or detail drawings and project conditions.

E. Install sealants and/or epoxy grout around frame edges.

3.03 TOLERANCES

A. Maximum Diagonal Distortion: 1/16 inch measured with straight edge, corner to corner

3.04 ADJUSTING

A. Verify equipment functions properly and that keying is correct. Make any corrections that are required.

3.05 CLEANING

A. Clean equipment with recommended products. Clean surrounding area of debris, packing materials and other soil that occurred through installation.

B. Remove non-permanent labels, non-permanent protective coatings, identifying marks, and foreign materials.

C. Clean concealed work prior to enclosure.

END OF SECTION

Job Number: 10-007

APPENDIX A

DOOR SCHEDULE

Door Schedule

Door schedule includes detention doors and frames (6xx series doors) and wood, aluminum and hollow metal doors in hollow metal frames(1 xx series doors) with standard hardware.

Detention frames shall be grouted. Detention contractor shall coordinate with manufacturer for number and location of grouting holes.

Lock/latchset hardware manufacturer representitive or door hardware supplier shall meet with the Owner to review scheduled hardware functions, assure hardware to be ordered functions as Owner requires, make changes prior to ordering hardware. Replace hardware that does not function as required by Owner due to failure to incorporate changes into order or failure to meet with Owner. Schedules shall be reviewed assuming changes have been incorporated unless specific changes are noted, deviations from schedule will not be marked unless specific Owner changes are noted. Replace hardware that does not function to Owner requirements due to errors in the shop drawing.

Conduits shall not pass through steel lintels, coordinate routing of conduit for each location.

Door hardware supplier shall review hardware for installation conflicts and code compliance, note and suggest correction for conflicts encountered.

All electric strikes and power supplies are listed as 24VDC. Hardware supplier shall verify existing electric strike voltage and furnish and install equipment compatible with existing voltage prior to ordering.

101

From **112 Stair**
To **10 Corridor**

Door:	Frame:	Unit:	
3'-0" x 6'-8" x 1 3/4"	3'-4" x 6'-10" x 5 3/4"	Hand:	LH
Wood	16 gage	Label:	60 min.
Narrow Light		Glass:	1/4" Wire Glass
	Anchor: Stud Anchor		

Hardware:
3 ea. Hinges: TA2714 4 1/2 x 4 1/2 US26D - McKinney
1 ea. Storeroom Lockset: ML2057 - Corbin Russwin
1 ea. Closer: 4111 - LCN
1 ea. Wall Stop: 400 US26D - Rockwood
1 ea. Electric Strike: 6210 - Von Duprin
1 ea. Magnetic Switch: MS 766 - Von Duprin
1 ea. Power Supply: PS-873BK 24VDC - Von Duprin

102

From **Not Used**
To

Door:	Frame:	Unit:
	Anchor:	

Hardware:

103

From **Not Used**
To

Door:	Frame:	Unit:
	Anchor:	

Hardware:

104

From **10□ Corridor**
To **104 Tunnel**

Door:	Frame:	Unit:
3'-4" x 7'-0" x 1 3/4"	3'-8" x 7'-2" x 5 3/4"	
existing	16 gage	
existing		
	Anchor: Thru-Bolt Tube Spacer	

Hardware:
3 ea. Hinges: TA2714 4 1/2 x 4 1/2 US26D - McKinney
1 ea. Storeroom Lockset: ML2057 - Corbin Russwin
1 ea. Closer: 4111-Spring Cush - LCN
1 ea. Electric Strike: 6210 - Von Duprin
1 ea. Magnetic Switch: MS 766 - Von Duprin
1 ea. Power Supply: PS-873BK 24VDC - Von Duprin

105

From **125 Storage**
To **127 Storage**

Door:	Frame:	Unit:
3'-0" x 7'-0" x 1 3/4"	3'-4" x 7'-2" x 5 3/4"	Hand: LH
Wood	16 gage	
Flush		
	Anchor: Thru-Bolt Tube Spacer	

Hardware:
3 ea. Hinges: TA2714 4 1/2 x 4 1/2 US26D - McKinney
1 ea. Storeroom Lockset: ML2057 - Corbin Russwin
1 ea. Closer: 4111 - LCN
1 ea. Wall Stop: 402 US26D - Rockwood

106

From **10□ Corridor**
To **130 Storage**

Door:	Frame:	Unit:
3'-0" x 7'-0" x 1 3/4"	3'-4" x 7'-2" x 5 3/4"	Hand: LH
Wood	16 gage	
Flush		
	Anchor: Stud Anchor	

Hardware:
3 ea. Hinges: TA2714 4 1/2 x 4 1/2 US26D - McKinney
1 ea. Storeroom Lockset: ML2057 - Corbin Russwin
1 ea. Closer: 4111-Spring Cush - LCN

107

From **10□ Corridor**
To **131 Corridor**

Door:	Frame:	Unit:
3'-0" x 7'-0" x 1 3/4"	3'-4" x 7'-2" x 5 3/4"	Hand: LHR
Wood	16 gage	Label: 45 min.
Flush		
	Anchor: Stud Anchor	

Hardware:
3 ea. Hinges: TA2714 4 1/2 x 4 1/2 US26D - McKinney
1 ea. Storeroom Lockset: ML2057 - Corbin Russwin
1 ea. Closer: 4111 - LCN
1 ea. Wall Stop: 400 US26D - Rockwood
1 ea. Electric Strike: 6210 - Von Duprin
1 ea. Magnetic Switch: MS 766 - Von Duprin
1 ea. Power Supply: PS-873BK 24VDC - Von Duprin

108

From **132 Stair**
To **10□ Corridor**

Door:	Frame:	Unit:
3'-0" x 7'-0" x 1 3/4"	3'-4" x 7'-2" x 5 3/4"	Hand: LH
Wood	16 gage	Label: 60 min.
Narrow Light		Glass: 1/4" Wire Glass
	Anchor: Stud Anchor	

Hardware:
3 ea. Hinges: TA2714 4 1/2 x 4 1/2 US26D - McKinney
1 ea. Storeroom Lockset: ML2057 - Corbin Russwin
1 ea. Closer: 4111 - LCN
1 ea. Wall Stop: 400 US26D - Rockwood
1 ea. Electric Strike: 6210 - Von Duprin
1 ea. Magnetic Switch: MS 766 - Von Duprin
1 ea. Power Supply: PS-873BK 24VDC - Von Duprin

109

From **137 Men's Toilet Room**
To **12□ Ele□tri□al**

Door:	Frame:	Unit:
3'-0" x 7'-0" x 1 3/4"	3'-4" x 7'-2" x 5 3/4"	
existing	existing	
	Anchor:	

Hardware:
3 ea. Hinges: TA2714 4 1/2 x 4 1/2 US26D - McKinney
1 ea. Storeroom Lockset: ML2057 - Corbin Russwin
1 ea. Closer: 4111-Spring Cush - LCN

110

From **131 Corridor**
To **133 Storage**

Door:	Frame:	Unit:
3'-0" x 7'-0" x 1 3/4"	3'-4" x 7'-2" x 5 3/4"	Hand: RH
Wood	16 gage	Label: 45 min.
Flush		
	Anchor: Stud Anchor	

Hardware:
3 ea. Hinges: TA2714 4 1/2 x 4 1/2 US26D - McKinney
1 ea. Storeroom Lockset: ML2057 - Corbin Russwin
1 ea. Closer: 4111-Spring Cush - LCN

111

From **131 Corridor**
To **142 Stair**

Door:	Frame:	Unit:
3'-0" x 7'-0" x 1 3/4"	3'-4" x 7'-2" x 5 3/4"	Hand: LH
Wood	16 gage	Label: 60 min.
Narrow Light		Glass: 1/4" Wire Glass
	Anchor: Stud Anchor	

Hardware:
3 ea. Hinges: TA2714 4 1/2 x 4 1/2 US26D - McKinney
1 ea. Passage Lockset: ML2010 - Corbin Russwin
1 ea. Closer: 4111 - LCN
1 ea. Wall Stop: 400 US26D - Rockwood

112

From **131 Corridor**
To **136 Women's Toilet Room**

Door:	Frame:	Unit:	
3'-0" x 7'-0" x 1 3/4"	3'-4" x 7'-2" x 5 3/4"	Hand:	RH
Wood	16 gage	Label:	45 min.
Flush			
	Anchor: Stud Anchor		

Hardware:
3 ea. Hinges: TA2714 4 1/2 x 4 1/2 US26D - McKinney
1 ea Passage Lockset: ML2010 - Corbin Russwin
1 ea. Closer: 4111 - LCN
1 ea. Wall Stop: 400 US26D - Rockwood
2 ea. Kickplate: 12" x D.W.-2" US32D x US18 B3E - Rockwood

113

From **131 Corridor**
To **137 Men's Toilet Room**

Door:	Frame:	Unit:	
3'-0" x 7'-0" x 1 3/4"	3'-4" x 7'-2" x 5 3/4"	Hand:	LH
Wood	16 gage	Label:	45 min.
Flush			
	Anchor: Stud Anchor		

Hardware:
3 ea. Hinges: TA2714 4 1/2 x 4 1/2 US26D - McKinney
1 ea. Passage Lockset: ML2010 - Corbin Russwin
1 ea. Closer: 4111 - LCN
1 ea. Wall Stop: 400 US26D - Rockwood
2 ea. Kickplate: 12" x D.W.-2" US32D x US18 B3E - Rockwood

201

From **202 O□en Offi□e**
To **201 FOC Dire□tor**

Door:	Frame:	Unit:	
3'-0" x 7'-0" x 1 3/4"	3'-4" x 7'-2" x 5 3/4"	Hand:	RH
Wood	16 gage		
Flush	01B/A413		
	Anchor: Stud Anchor		

Hardware:
3 ea. Hinges: TA2714 4 1/2 x 4 1/2 US26D - McKinney
1 ea. Classroom Lockset: ML2055 - Corbin Russwin
1 ea. Wall Stop: 400 US26D - Rockwood

202

From **202 O□en Offi□e**
To **203 Enf Offi□e**

Door:	Frame:	Unit:	
3'-0" x 7'-0" x 1 3/4"	3'-4" x 7'-2" x 5 3/4"	Hand:	RH
Wood	16 gage		
Full Narrow Light		Glass:	1/4" Tempered
	Anchor: Stud Anchor		

Hardware:
3 ea. Hinges: TA2714 4 1/2 x 4 1/2 US26D - McKinney
1 ea. Classroom Lockset: ML2055 - Corbin Russwin
1 ea. Wall Stop: 400 US26D - Rockwood

203

From **202 O□en Offi□e**
To **205 Se□ure Files**

Door:	Frame:	Unit:
3'-0" x 7'-0" x 1 3/4"	3'-4" x 7'-2" x 5 3/4"	Hand: LH
Wood	16 gage	
Flush		
	Anchor: Stud Anchor	

Hardware:
3 ea. Hinges: TA2714 4 1/2 x 4 1/2 US26D - McKinney
1 ea. Storeroom Lockset: ML2057 - Corbin Russwin
1 ea. Closer: 4011 - LCN
1 ea. Wall Stop: 400 US26D - Rockwood

204

From **201 FOC Dire□tor**
To **204 Closet**

Door:	Frame:	Unit:
3'-0" x 7'-0" x 1 3/4"	3'-4" x 7'-2" x 5 3/4"	Hand: LHR
Wood	16 gage	
Flush		
	Anchor: Stud Anchor	

Hardware:
3 ea. Hinges: TA2714 4 1/2 x 4 1/2 US26D - McKinney
1 ea. Passage Lockset: ML2010 - Corbin Russwin
1 ea. Overhead Stop: 410S-US32D - Glynn-Johnson

205

From **202 O□en Offi□e**
To **207 Conferen□e Room**

Door:	Frame:	Unit:
3'-0" x 7'-0" x 1 3/4"	3'-4" x 7'-2" x 5 3/4"	Hand: LHR
Wood	16 gage	
Flush		
	Anchor: Stud Anchor	

Hardware:
3 ea. Hinges: TA2714 4 1/2 x 4 1/2 US26D - McKinney
1 ea. Storeroom Lockset: ML2057 - Corbin Russwin
1 ea. Closer: 4111 - LCN
1 ea. Wall Stop: 400 US26D - Rockwood
1 ea. Electric Strike: 6210 - Von Duprin
1 ea. Power Supply: PS-873BK 24VDC - Von Duprin
1 ea. Magnetic Switch: MS 764 - Von Duprin

206

From **221 Corridor**
To **207 Conferen□e Room**

Door:	Frame:	Unit:
3'-0" x 7'-0" x 1 3/4"	3'-4" x 7'-2" x 5 3/4"	Hand: RH
Wood	16 gage	
Flush		
	Anchor: Stud Anchor	

Hardware:
3 ea. Hinges: TA2714 4 1/2 x 4 1/2 US26D - McKinney
1 ea. Classroom Lockset: ML2055 - Corbin Russwin
1 ea. Closer: 4111 - LCN
1 ea. Wall Stop: 400 US26D - Rockwood

207

From **E□terior**
To **216 Vesti□ule**

Door:	Frame:	Unit:
3'-0" x 7'-0" x 1 3/4"	8'-0" x 7'-2" x 5 3/4"	Hand: LHR
Aluminum	Aluminum	
Full Light	13/A201	Glass: 1" Tempered Insulated Unit
	Anchor: Stud Anchor	

Hardware:
3 ea. Hinges: TA2714 4 1/2 x 4 1/2 US26D - McKinney
1 ea. Storeroom Lockset: ML2057 - Corbin Russwin
1 ea. Closer: 4111-Spring Cush - LCN
1 ea. Wall Stop: 400 US26D - Rockwood
1 ea. Electric Strike: 6210 - Von Duprin
1 ea. Magnetic Switch: MS 764 - Von Duprin
1 ea. Power Supply: PS-873BK 24VDC - Von Duprin
1 ea. Weather Seal: 130NA - National Guard
1 ea. Sweep: 600A - National Guard
1 ea. Threshold: 896N - National Guard

208

From **216 Vesti□ule**
To **217 Corridor**

Door:	Frame:	Unit:
		Hand: LHR
existing	existing	
Full Light		
	Anchor:	

Hardware:
3 ea. Hinges: TA2714 4 1/2 x 4 1/2 US26D - McKinney
1 ea. Closer: Manufacturer's standard - Door Manufacturer
1 ea. Wall Stop: 400 US26D - Rockwood
1 ea. Push: 70B US32D - Rockwood
1 ea. Pull: 107 x 70B US32D - Rockwood

209

From **Not Used**
To **Not Used**

Door:	Frame:	Unit:
	Anchor:	

Hardware:

210

From **27□ Ne□ Inter□ie□**
To **271 Corridor**

Door:	Frame:	Unit:
3'-0" x 7'-0" x 1 3/4"	3'-4" x 7'-2" x 5 3/4"	Hand: LHR
Acoustical Wood	16 gage	Label: 45 min.
Flush		
	Anchor: Thru-Bolt Tube Spacer	

Hardware:
3 ea. Hinges: TA2714 4 1/2 x 4 1/2 US26D - McKinney
1 ea. Classroom Lockset: ML2055 - Corbin Russwin
1 ea. Closer: 4111-Spring Cush - LCN
1 ea. Acoustical Gasket: 134NA - National Guard
1 ea. Automatic Door Bottom: 420NA - National Guard

211

From **212 Corridor**
To **208 Offi□e**

Door:	Frame:	Unit:
3'-0" x 7'-0" x 1 3/4"	3'-4" x 7'-2" x 5 3/4"	Hand: RH
Wood	16 gage	
Full Narrow Light		Glass: 1/4" Tempered
	Anchor: Stud Anchor	

Hardware:
3 ea. Hinges: TA2714 4 1/2 x 4 1/2 US26D - McKinney
1 ea. Classroom Lockset: ML2055 - Corbin Russwin
1 ea. Wall Stop: 400 US26D - Rockwood

212

From **280 Corridor**
To **274 Information Ser□i□es**

Door:	Frame:	Unit:
3'-0" x 7'-0" x 1 3/4"	3'-4" x 7'-2" x 5 3/4"	Hand: LH
Wood	16 gage	Label: 45 min.
Flush		
	Anchor: Stud Anchor	

Hardware:
3 ea. Hinges: TA2714 4 1/2 x 4 1/2 US26D - McKinney
1 ea. Storeroom Lockset: ML2057 - Corbin Russwin
1 ea. Closer: 4111-Spring Cush - LCN
1 ea. Electric Strike: 6210 - Von Duprin
1 ea. Magnetic Switch: MS 766 - Von Duprin
1 ea. Power Supply: PS-873BK 24VDC - Von Duprin

213

From **213 Conferen□e Room**
To **212 Corridor**

Door:	Frame:	Unit:
3'-0" x 7'-0" x 1 3/4"	3'-4" x 7'-2" x 5 3/4"	Hand: LHR
Wood	16 gage	
Flush		
	Anchor: Stud Anchor	

Hardware:
3 ea. Hinges: TA2714 4 1/2 x 4 1/2 US26D - McKinney
1 ea. Classroom Lockset: ML2055 - Corbin Russwin
1 ea. Closer: 4111 - LCN
1 ea. Wall Stop: 400 US26D - Rockwood

214

From **212 Corridor**
To **210 Offi□e**

Door:	Frame:	Unit:
3'-0" x 7'-0" x 1 3/4"	3'-4" x 7'-2" x 5 3/4"	Hand: LH
Wood	16 gage	
Full Narrow Light		Glass: 1/4" Tempered
	Anchor: Stud Anchor	

Hardware:
3 ea. Hinges: TA2714 4 1/2 x 4 1/2 US26D - McKinney
1 ea. Classroom Lockset: ML2055 - Corbin Russwin
1 ea. Wall Stop: 400 US26D - Rockwood

215

From **212 Corridor**
To **211 Offi□e**

Door:	Frame:	Unit:
3'-0" x 7'-0" x 1 3/4"	3'-4" x 7'-2" x 5 3/4"	Hand: RH
Wood	16 gage	
Full Narrow Light		Glass: 1/4" Tempered
	Anchor: Stud Anchor	

Hardware:
3 ea. Hinges: TA2714 4 1/2 x 4 1/2 US26D - McKinney
1 ea. Classroom Lockset: ML2055 - Corbin Russwin
1 ea. Wall Stop: 400 US26D - Rockwood

216

From **212 Corridor**
To **225 Offi□e**

Door:	Frame:	Unit:
3'-0" x 7'-0" x 1 3/4"	3'-4" x 7'-2" x 5 3/4"	Hand: RH
Wood	16 gage	
Flush		
	Anchor: Stud Anchor	

Hardware:
3 ea. Hinges: TA2714 4 1/2 x 4 1/2 US26D - McKinney
1 ea. Classroom Lockset: ML2055 - Corbin Russwin
1 ea. Wall Stop: 400 US26D - Rockwood

217

From **214 Witness Waiting Room**
To **215 O□en Offi□e**

Door:	Frame:	Unit:
3'-0" x 7'-0" x 1 3/4"	3'-4" x 7'-2" x 5 3/4"	Hand: RHR
Wood	16 gage	
Flush		
	Anchor: Stud Anchor	

Hardware:
3 ea. Hinges: TA2714 4 1/2 x 4 1/2 US26D - McKinney
1 ea. Storeroom Lockset: ML2057 - Corbin Russwin
1 ea. Closer: 4111 - LCN
1 ea. Wall Stop: 400 US26D - Rockwood
1 ea. Electric Strike: 6210 - Von Duprin
1 ea. Magnetic Switch: MS 766 - Von Duprin
1 ea. Power Supply: PS-873BK 24VDC - Von Duprin

218

From **217 Corridor**
To **214 Witness Waiting Room**

Door:	Frame:	Unit:
3'-0" x 7'-0" x 1 3/4"	3'-4" x 7'-2" x 5 3/4"	Hand: RH
Wood	16 gage	Label: 45 min.
Flush		
	Anchor: Stud Anchor	

Hardware:
3 ea. Hinges: TA2714 4 1/2 x 4 1/2 US26D - McKinney
1 ea. Classroom Lockset: ML2055 - Corbin Russwin
1 ea. Closer: 4111-Spring Cush - LCN

219

From **217 Corridor**
To **218 Stair**

Door:	Frame:	Unit:
3'-0" x 7'-0" x 1 3/4"	3'-4" x 7'-2" x 5 3/4"	Hand: LHR
Wood	16 gage	Label: 60 min.
Narrow Light		Glass: 1/4" Wire Glass
	Anchor: Stud Anchor	

Hardware:
3 ea. Hinges: TA2714 4 1/2 x 4 1/2 US26D - McKinney
1 ea. Passage Lockset: ML2010 - Corbin Russwin
1 ea. Closer: 4111-Spring Cush - LCN

220

From **222 Corridor**
To **223 Offi□e**

Door:	Frame:	Unit:
3'-0" x 7'-0" x 1 3/4"	3'-4" x 7'-2" x 5 3/4"	Hand: RH
Wood	16 gage	
Full Narrow Light		Glass: 1/4" Tempered
	Anchor: Stud Anchor	

Hardware:
3 ea. Hinges: TA2714 4 1/2 x 4 1/2 US26D - McKinney
1 ea. Classroom Lockset: ML2055 - Corbin Russwin
1 ea. Wall Stop: 400 US26D - Rockwood

221

From **202 O□en Offi□e**
To **206 Closet**

Door:	Frame:	Unit:
3'-0" x 7'-0" x 1 3/4"	3'-4" x 7'-2" x 5 3/4"	Hand: LHR
Wood	16 gage	
Flush		
	Anchor: Stud Anchor	

Hardware:
3 ea. Hinges: TA2714 4 1/2 x 4 1/2 US26D - McKinney
1 ea. Passage Lockset: ML2010 - Corbin Russwin

222

From **222 Corridor**
To **224 Offi□e**

Door:	Frame:	Unit:
3'-0" x 7'-0" x 1 3/4"	3'-4" x 7'-2" x 5 3/4"	Hand: RH
Wood	16 gage	
Full Narrow Light		Glass: 1/4" Tempered
	Anchor: Stud Anchor	

Hardware:
3 ea. Hinges: TA2714 4 1/2 x 4 1/2 US26D - McKinney
1 ea. Classroom Lockset: ML2055 - Corbin Russwin
1 ea. Wall Stop: 400 US26D - Rockwood

223

From **221 Corridor**
To **222 Corridor**

Door:	Frame:	Unit:
3'-0" x 7'-0" x 1 3/4"	3'-4" x 7'-2" x 5 3/4"	Hand: LHR
Wood	16 gage	Label: 45 min.
Flush		
	Anchor: Stud Anchor	

Hardware:
3 ea. Hinges: TA2714 4 1/2 x 4 1/2 US26D - McKinney
1 ea. Storeroom Lockset: ML2057 - Corbin Russwin
1 ea. Closer: 4111-Spring Cush - LCN
1 ea. Electric Strike: 6210 - Von Duprin
1 ea. Magnetic Switch: MS 766 - Von Duprin
1 ea. Power Supply: PS-873BK 24VDC - Von Duprin

224

From **222 Corridor**
To **20□ Files**

Door:	Frame:	Unit:
3'-0" x 7'-0" x 1 3/4"	3'-4" x 7'-2" x 5 3/4"	Hand: LH
Wood	16 gage	
Full Narrow Light		Glass: 1/4" Tempered
	Anchor: Stud Anchor	

Hardware:
3 ea. Hinges: TA2714 4 1/2 x 4 1/2 US26D - McKinney
1 ea. Classroom Lockset: ML2055 - Corbin Russwin
1 ea. Wall Stop: 400 US26D - Rockwood

225

From **221 Corridor**
To **21□ Men's Toilet Room**

Door:	Frame:	Unit:
3'-0" x 7'-0" x 1 3/4"	3'-4" x 7'-2" x 5 3/4"	Hand: RH
Wood	16 gage	Label: 45 min.
Flush		
	Anchor: Stud Anchor	

Hardware:
3 ea. Hinges: TA2714 4 1/2 x 4 1/2 US26D - McKinney
1 ea. Passage Lockset: ML2010 - Corbin Russwin
1 ea. Closer: 4111 - LCN
1 ea. Wall Stop: 400 US26D - Rockwood
2 ea. Kickplate: 12" x D.W.-2" US32D x US18 B3E - Rockwood

226

From **221 Corridor**
To **220 Women's Toilet Room**

Door:	Frame:	Unit:
3'-0" x 7'-0" x 1 3/4"	3'-4" x 7'-2" x 5 3/4"	Hand: LH
Wood	16 gage	Label: 45 min.
Flush		
	Anchor: Stud Anchor	

Hardware:
3 ea. Hinges: TA2714 4 1/2 x 4 1/2 US26D - McKinney
1 ea. Passage Lockset: ML2010 - Corbin Russwin
1 ea. Closer: 4111 - LCN
1 ea. Wall Stop: 400 US26D - Rockwood
2 ea. Kickplate: 12" x D.W.-2" US32D x US18 B3E - Rockwood

227

From **221 Corridor**
To **287 Data Room**

Door:	Frame:	Unit:
3'-0" x 7'-0" x 1 3/4"	3'-4" x 7'-2" x 5 3/4"	Hand: LHR
Wood	16 gage	Label: 45 min.
Flush		
	Anchor: Stud Anchor	

Hardware:
3 ea. Hinges: TA2714 4 1/2 x 4 1/2 US26D - McKinney
1 ea. Storeroom Lockset: ML2057 - Corbin Russwin
1 ea. Closer: 4111-Spring Cush - LCN

228

From **E□terior**
To **227 Vesti□ule**

Door:	Frame:	Unit:
3'-0" x 7'-0" x 1 3/4"	9'-8" x 9'-6" x 5 3/4"	
Aluminum	Aluminum	
Full Light		Glass: 1/4" Tempered
	Anchor:	

Hardware:
1 set Hinges: Manufacturer's standard - Door Manufacturer
1 ea. Latchset w/ latch paddle: Manufacturer's standard - Door Manufacturer
1 ea. Closer: Manufacturer's standard - Door Manufacturer
1 ea. Pull: Manufacturer's standard - Door Manufacturer
1 ea. Door Operator: 4620 - LCN
1 ea. Threshold: Manufacturer's standard - Door Manufacturer
1 ea. Weather Seal: Manufacturer's standard - Door Manufacturer
1 ea. Sweep: Manufacturer's standard - Door Manufacturer

229

From **E□terior**
To **227 Vesti□ule**

Door:	Frame:	Unit:
3'-0" x 7'-0" x 1 3/4"	9'-8" x 9'-6" x 5 3/4"	
Aluminum	Aluminum	
Full Light		Glass: 1" Tempered Insulated Unit
	Anchor:	

Hardware:
1 set Hinges: Manufacturer's standard - Door Manufacturer
1 ea. Latchset w/ latch paddle: Manufacturer's standard - Door Manufacturer
1 ea. Closer: Manufacturer's standard - Door Manufacturer
1 ea. Pull: Manufacturer's standard - Door Manufacturer
1 ea. Push / Pull: Manufacturer's standard - Door Manufacturer
1 ea. Threshold: Manufacturer's standard - Door Manufacturer
1 ea. Sweep: Manufacturer's standard - Door Manufacturer

230

From **221 Corridor**
To **228 Waiting Room**

Door:	Frame:	Unit:
3'-0" x 7'-0" x 1 3/4"	3'-4" x 7'-2" x 5 3/4"	Hand: RH
Wood	16 gage	Label: 45 min.
Flush		
	Anchor: Stud Anchor	

Hardware:
3 ea. Hinges: TA2714 4 1/2 x 4 1/2 US26D - McKinney
1 ea. Classroom Lockset: ML2055 - Corbin Russwin
1 ea. Closer: 4111 - LCN
1 ea. Wall Stop: 400 US26D - Rockwood

231

From **221 Corridor**
To **202 O□en Offi□e**

Door:	Frame:	Unit:
3'-0" x 7'-0" x 1 3/4"	3'-4" x 7'-2" x 5 3/4"	Hand: RH
Wood	16 gage	Label: 45 min.
Flush		
	Anchor: Stud Anchor	

Hardware:
3 ea. Hinges: TA2714 4 1/2 x 4 1/2 US26D - McKinney
1 ea. Storeroom Lockset: ML2057 - Corbin Russwin
1 ea. Closer: 4111-Spring Cush - LCN
1 ea. Electric Strike: 6210 - Von Duprin
1 ea. Magnetic Switch: MS 766 - Von Duprin
1 ea. Power Supply: PS-873BK 24VDC - Von Duprin

232

From **228 Waiting Room**
To **231 O□en Offi□e**

Door:	Frame:	Unit:
3'-0" x 7'-0" x 1 3/4"	3'-4" x 7'-2" x 5 3/4"	Hand: RHR
Wood	16 gage	
Full Narrow Light		Glass: 1/4" Tempered
	Anchor: Stud Anchor	

Hardware:
3 ea. Hinges: TA2714 4 1/2 x 4 1/2 US26D - McKinney
1 ea. Storeroom Lockset: ML2057 - Corbin Russwin
1 ea. Closer: 4111-Spring Cush - LCN
1 ea. Electric Strike: 6210 - Von Duprin
1 ea. Power Supply: PS-873BK 24VDC - Von Duprin
1 ea. Magnetic Switch: MS 766 - Von Duprin

233

From **231 O□en Offi□e**
To **22□ Closet**

Door:	Frame:	Unit:
3'-0" x 7'-0" x 1 3/4"	3'-4" x 7'-2" x 5 3/4"	Hand: RHR
Wood	16 gage	
Flush		
	Anchor: Stud Anchor	

Hardware:
3 ea. Hinges: TA2714 4 1/2 x 4 1/2 US26D - McKinney
1 ea. Passage Lockset: ML2010 - Corbin Russwin
1 ea. Overhead Stop: 410S-US32D - Glynn-Johnson

234

From **231 O□en Offi□e**
To **230 Offi□e**

Door:	Frame:	Unit:
3'-0" x 7'-0" x 1 3/4"	3'-4" x 7'-2" x 5 3/4"	Hand: LH
Wood	16 gage	
Full Narrow Light		Glass: 1/4" Tempered
	Anchor: Stud Anchor	

Hardware:
3 ea. Hinges: TA2714 4 1/2 x 4 1/2 US26D - McKinney
1 ea. Classroom Lockset: ML2055 - Corbin Russwin
1 ea. Wall Stop: 400 US26D - Rockwood

235

From **231 O□en Offi□e**
To **240 Offi□e**

Door:	Frame:	Unit:
3'-0" x 7'-0" x 1 3/4"	3'-4" x 7'-2" x 5 3/4"	Hand: LH
Wood	16 gage	
Full Narrow Light		Glass: 1/4" Tempered
	Anchor: Stud Anchor	

Hardware:
3 ea. Hinges: TA2714 4 1/2 x 4 1/2 US26D - McKinney
1 ea. Classroom Lockset: ML2055 - Corbin Russwin
1 ea. Wall Stop: 400 US26D - Rockwood

236

From **231 O□en Offi□e**
To **23□ Toilet Room**

Door:	Frame:	Unit:
3'-0" x 7'-0" x 1 3/4"	3'-4" x 7'-2" x 5 3/4"	Hand: RH
Wood	16 gage	
Flush		
	Anchor: Stud Anchor	

Hardware:
3 ea. Hinges: TA2714 4 1/2 x 4 1/2 US26D - McKinney
1 ea. Privacy Lockset: ML2030 - Corbin Russwin
1 ea. Wall Stop: 400 US26D - Rockwood
2 ea. Kickplate: 12" x D.W.-2" US32D x US18 B3E - Rockwood

237

From **231 O□en Offi□e**
To **241 Offi□e**

Door:	Frame:	Unit:
3'-0" x 7'-0" x 1 3/4"	3'-4" x 7'-2" x 5 3/4"	Hand: LH
Wood	16 gage	
Full Narrow Light		Glass: 1/4" Tempered
	Anchor: Stud Anchor	

Hardware:
3 ea. Hinges: TA2714 4 1/2 x 4 1/2 US26D - McKinney
1 ea. Classroom Lockset: ML2055 - Corbin Russwin
1 ea. Wall Stop: 400 US26D - Rockwood

238

From **231 O□en Offi□e**
To **243 Files**

Door:	Frame:	Unit:
3'-0" x 7'-0" x 1 3/4"	3'-4" x 7'-2" x 5 3/4"	Hand: LH
Wood	16 gage	
Flush		
	Anchor: Stud Anchor	

Hardware:
3 ea. Hinges: TA2714 4 1/2 x 4 1/2 US26D - McKinney
1 ea. Storeroom Lockset: ML2057 - Corbin Russwin
1 ea. Wall Stop: 400 US26D - Rockwood

239

From **231 O□en Offi□e**
To **242 Offi□e**

Door:	Frame:	Unit:
3'-0" x 7'-0" x 1 3/4"	3'-4" x 7'-2" x 5 3/4"	Hand: LH
Wood	16 gage	
Full Narrow Light		Glass: 1/4" Tempered
	Anchor: Stud Anchor	

Hardware:
3 ea. Hinges: TA2714 4 1/2 x 4 1/2 US26D - McKinney
1 ea. Classroom Lockset: ML2055 - Corbin Russwin
1 ea. Wall Stop: 400 US26D - Rockwood

240

From **288 Waiting**
To **244 O□en Offi□e**

Door:	Frame:	Unit:
3'-0" x 7'-0" x 1 3/4"	3'-4" x 7'-2" x 5 3/4"	Hand: LH
Wood	16 gage	
Flush		
	Anchor: Stud Anchor	

Hardware:
3 ea. Hinges: TA2714 4 1/2 x 4 1/2 US26D - McKinney
1 ea. Storeroom Lockset: ML2057 - Corbin Russwin
1 ea. Closer: 4111-Spring Cush - LCN
1 ea. Electric Strike: 6210 - Von Duprin
1 ea. Magnetic Switch: MS 766 - Von Duprin
1 ea. Power Supply: PS-873BK 24VDC - Von Duprin

241

From **221 Corridor**
To **288 Waiting**

Door:	Frame:	Unit:
3'-0" x 7'-0" x 1 3/4"	3'-4" x 7'-2" x 5 3/4"	Hand: LH
Wood	16 gage	Label: 45 min.
Flush		
	Anchor: Stud Anchor	

Hardware:
3 ea. Hinges: TA2714 4 1/2 x 4 1/2 US26D - McKinney
1 ea. Classroom Lockset: ML2055 - Corbin Russwin
1 ea. Closer: 4111 - LCN
1 ea. Wall Stop: 400 US26D - Rockwood

242

From **Not Used**
To **Not Used**

Door: Frame: Unit:

Anchor:

Hardware:

243

From **246 Corridor**
To **245 Stair**

Door:	Frame:	Unit:	
3'-0" x 7'-0" x 1 3/4"	3'-4" x 7'-2" x 5 3/4"	Hand:	RHR
Wood	16 gage	Label:	60 min.
Narrow Light		Glass:	1/4" Wire Glass
	Anchor: Stud Anchor		

Hardware:
3 ea. Hinges: TA2714 4 1/2 x 4 1/2 US26D - McKinney
1 ea. Passage Lockset: ML2010 - Corbin Russwin
1 ea. Closer: 4111 - LCN
1 ea. Wall Stop: 400 US26D - Rockwood

244

From **257 Corridor**
To **256 Toilet**

Door:	Frame:	Unit:	
3'-0" x 7'-0" x 1 3/4"	3'-4" x 7'-2" x 5 3/4"	Hand:	LHR
Wood	16 gage		
Flush			
	Anchor: Stud Anchor		

Hardware:
3 ea. Hinges: TA2714 4 1/2 x 4 1/2 US26D - McKinney
1 ea. Privacy Lockset: ML2030 - Corbin Russwin
1 ea. Wall Stop: 400 US26D - Rockwood
2 ea. Kickplate: 12" x D.W.-2" US32D x US18 B3E - Rockwood

245

From **Not Used**
To

Door: Frame: Unit:

Anchor:

Hardware:

246

From **246 Corridor**
To **266 □anitor**

Door:	Frame:	Unit:	
3'-0" x 7'-0" x 1 3/4"	3'-4" x 7'-2" x 5 3/4"	Hand:	RHR
Wood	16 gage	Label:	45 min.
Flush			
	Anchor: Stud Anchor		

Hardware:
3 ea. Hinges: TA2714 4 1/2 x 4 1/2 US26D - McKinney
1 ea. Storeroom Lockset: ML2057 - Corbin Russwin
1 ea. Closer: 4111-Spring Cush - LCN
2 ea. Kickplate: 12" x D.W.-2" US32D x US18 B3E - Rockwood

247

From **246 Corridor**
To **267 Toilet**

Door:	Frame:	Unit:	
3'-0" x 7'-0" x 1 3/4"	3'-4" x 7'-2" x 5 3/4"	Hand:	LHR
Wood	16 gage	Label:	45 min.
Flush			
	Anchor: Thru-Bolt Tube Spacer		

Hardware:
3 ea. Hinges: TA2714 4 1/2 x 4 1/2 US26D - McKinney
1 ea. Storeroom Lockset: ML2057 - Corbin Russwin
1 ea. Closer: 4111-Spring Cush - LCN
1 ea. Electric Strike: 6210 - Von Duprin
1 ea. Power Supply: PS-873BK 24VDC - Von Duprin
2 ea. Kickplate: 12" x D.W.-2" US32D x US18 B3E - Rockwood

248

From **E□terior**
To **270 Vesti□ule**

Door:	Frame:	Unit:	
3'-0" x 7'-0" x 1 3/4"	3'-4" x 7'-2" x 5 3/4"	Hand:	RHR
16 gage galv.	16 gage galv.		
Flush			
	Anchor: Thru-Bolt Tube Spacer		

Hardware:
3 ea. Hinges: TA2714 4 1/2 x 4 1/2 US26D - McKinney
1 ea. Storeroom Lockset: ML2057 - Corbin Russwin
1 ea. Closer: 4111 - LCN
1 ea. Wall Stop: 400 US26D - Rockwood
1 ea. Electric Strike: 6210 - Von Duprin
1 ea. Magnetic Switch: MS 766 - Von Duprin
1 ea. Power Supply: PS-873BK 24VDC - Von Duprin
1 ea. Sweep: 600A - National Guard
1 ea. Threshold: 896N - National Guard
1 ea. Weather Seal: 130NA - National Guard

249

From **246 Corridor**
To **271 Corridor**

Door:	Frame:	Unit:
3'-0" x 7'-0" x 1 3/4"	3'-4" x 7'-2" x 5 3/4"	Hand: LHR
16 gage	16 gage	Label: 45 min.
Flush		
	Anchor: Thru-Bolt Tube Spacer	

Hardware:
3 ea. Hinges: TA2714 4 1/2 x 4 1/2 US26D - McKinney
1 ea. Storeroom Lockset: ML2057 - Corbin Russwin
1 ea. Closer: 4111-Spring Cush - LCN
1 ea. Electric Strike: 6210 - Von Duprin
1 ea. Magnetic Switch: MS 766 - Von Duprin
1 ea. Power Supply: PS-873BK 24VDC - Von Duprin

250

From **271 Corridor**
To **264 O□en Offi□e**

Door:	Frame:	Unit:
3'-0" x 7'-0" x 1 3/4"	3'-4" x 7'-2" x 5 3/4"	Hand: LHR
existing	existing	
	Anchor:	

Hardware:
1 ea. Storeroom Lockset: ML2057 - Corbin Russwin
1 ea. Closer: 4111-Spring Cush - LCN
1 ea. Electric Strike: 6210 - Von Duprin
1 ea. Magnetic Switch: MS 766 - Von Duprin
1 ea. Power Supply: PS-873BK 24VDC - Von Duprin

251

From **264 O□en Offi□e**
To **258 Stair**

Door:	Frame:	Unit:
3'-0" x 7'-0" x 1 3/4"	3'-4" x 7'-2" x 5 3/4"	Hand: RHR
Wood	16 gage	Label: 60 min.
Flush		
	Anchor: Thru-Bolt Tube Spacer	

Hardware:
3 ea. Hinges: TA2714 4 1/2 x 4 1/2 US26D - McKinney
1 ea. Classroom Lockset: ML2055 - Corbin Russwin
1 ea. Closer: 4111-Spring Cush - LCN

252

From **264 O□en Offi□e**
To **263 Closet**

Door:	Frame:	Unit:
3'-0" x 7'-0" x 1 3/4"	3'-4" x 7'-2" x 5 3/4"	Hand: LHR
existing	existing	
	Anchor:	

Hardware:
1 ea. Passage Lockset: ML2010 - Corbin Russwin
1 ea. Overhead Stop: 410S-US32D - Glynn-Johnson

253

From **264 O□en Offi□e**
To **262 Brea□room**

Door:	Frame:	Unit:
3'-0" x 7'-0" x 1 3/4"	3'-4" x 7'-2" x 5 3/4"	Hand: RH
Wood	16 gage	
Half Light		Glass: 1/4" Tempered
	Anchor: Stud Anchor	

Hardware: 3 ea. Hinges: TA2714 4 1/2 x 4 1/2 US26D - McKinney
1 ea. Passage Lockset: ML2010 - Corbin Russwin
1 ea. Wall Stop: 400 US26D - Rockwood

254

From **262 Brea□room**
To **253 Corridor**

Door:	Frame:	Unit:
3'-0" x 7'-0" x 1 3/4"	3'-4" x 7'-2" x 5 3/4"	Hand: RHR
existing	existing	
	Anchor:	

Hardware: 1 ea. Passage Lockset: ML2010 - Corbin Russwin
1 ea. Wall Stop: 400 US26D - Rockwood

255

From **Not Used**
To **Not Used**

Door:	Frame:	Unit:
	Anchor:	

Hardware:

256

From **Not Used**
To **Not Used**

Door:	Frame:	Unit:
	Anchor:	

Hardware:

257

From **Not Used**
To **Not Used**

Door:	Frame:	Unit:
	Anchor:	

Hardware:

258

From **280 Corridor**
To **275 Ne E iden e Pro essi**

Door:	Frame:	Unit:
3'-0" x 7'-0" x 1 3/4"	3'-4" x 7'-2" x 5 3/4"	Hand: RH
16 gage	16 gage	
Flush		
	Anchor: Masonry Yoke	

Hardware:
3 ea. Hinges: TA2714 4 1/2 x 4 1/2 US26D - McKinney
1 ea. Storeroom Lockset: ML2057 - Corbin Russwin
1 ea. Closer: 4111 - LCN
1 ea. Wall Stop: 400 US26D - Rockwood
1 ea. Electric Strike: 6210 - Von Duprin
1 ea. Magnetic Switch: MS 766 - Von Duprin
1 ea. Power Supply: PS-873BK 24VDC - Von Duprin

259

From **Not Used**
To

Door:	Frame:	Unit:
	Anchor:	

Hardware:

260

From **Not Used**
To

Door:	Frame:	Unit:
	Anchor:	

Hardware:

261

From **Not Used**
To **Not Used**

Door:	Frame:	Unit:
	Anchor:	

Hardware:

262

From **Not Used**
To **Not Used**

Door:	Frame:	Unit:
	Anchor:	

Hardware:

263

From **Not Used**
To **Not Used**

Door:	Frame:	Unit:
	Anchor:	

Hardware:

264

From **E□terior**
To **103 Stair**

Door:	Frame:	Unit:	
3'-0" x 7'-0" x 1 3/4"	3'-4" x 7'-2" x 5 3/4"	Hand:	LHR
16 gage galv.	16 gage galv.		
Flush			
	Anchor: Thru-Bolt Tube Spacer		

Hardware:
3 ea. Hinges: TA2714 4 1/2 x 4 1/2 US26D - McKinney
1 ea. Storeroom Lockset: ML2057 - Corbin Russwin
1 ea. Closer: 4111-Spring Cush - LCN
1 ea. Sweep: 600A - National Guard
1 ea. Weather Seal: 130NA - National Guard
1 ea. Threshold: 896N - National Guard

265

From **227 Vesti□ule**
To **221 Corridor**

Door:	Frame:	Unit:	
3'-0" x 7'-0" x 1 3/4"	9'-8" x 9'-6" x 5 3/4"	Hand:	LHR
Aluminum	Aluminum		
Full Light	07/A201	Glass:	1/4" Tempered
	Anchor:		

Hardware:
1 set Hinges: Manufacturer's standard - Door Manufacturer
1 ea. Closer: Manufacturer's standard - Door Manufacturer
1 ea. Wall Stop: 400 US26D - Rockwood
1 ea. Door Operator: 4620 - LCN
1 ea. Pull: Manufacturer's standard - Door Manufacturer
1 ea. Push / Pull: Manufacturer's standard - Door Manufacturer

266

From **227 Vesti□ule**
To **221 Corridor**

Door:	Frame:	Unit:	
3'-0" x 7'-0" x 1 3/4"	9'-8" x 9'-6" x 5 3/4"	Hand:	RHR
Aluminum	Aluminum		
Full Light	07/A201	Glass:	1/4" Tempered
	Anchor:		

Hardware:
1 set Hinges: Manufacturer's standard - Door Manufacturer
1 ea. Closer: Manufacturer's standard - Door Manufacturer
1 ea. Wall Stop: 400 US26D - Rockwood
1 ea. Pull: Manufacturer's standard - Door Manufacturer
1 ea. Push / Pull: Manufacturer's standard - Door Manufacturer

267

From **270 Vestibule**
To **280 Corridor**

Door:	Frame:	Unit:
3'-0" x 7'-0" x 1 3/4"	3'-4" x 7'-2" x 5 3/4"	
16 gage	16 gage	Label: 45 min.
Flush		
	Anchor: Stud Anchor	

Hardware:
3 ea. Hinges: TA2714 4 1/2 x 4 1/2 US26D - McKinney
1 ea. Storeroom Lockset: ML2057 - Corbin Russwin
1 ea. Closer: 4111-Spring Cush - LCN
1 ea. Electric Strike: 6210 - Von Duprin
1 ea. Magnetic Switch: MS 764 - Von Duprin
1 ea. Power Supply: PS-873BK 24VDC - Von Duprin

301

From **301 Court Room**
To **303 Corridor**

Door:	Frame:	Unit:
3'-0" x 7'-0" x 1 3/4"	3'-4" x 7'-2" x 5 3/4"	Hand: RH
Acoustical Wood	16 gage	Label: 60 min.
Flush		
	Anchor: Stud Anchor	

Hardware:
3 ea. Hinges: TA2714 4 1/2 x 4 1/2 US26D - McKinney
1 ea. Storeroom Lockset: ML2057 - Corbin Russwin
1 ea. Closer: 4111 - LCN
1 ea. Wall Stop: 400 US26D - Rockwood
1 ea. Electric Strike: 6210 - Von Duprin
1 ea. Magnetic Switch: MS 766 - Von Duprin
1 ea. Power Supply: PS-873BK 24VDC - Von Duprin
1 ea. Acoustical Gasket: 134NA - National Guard
1 ea. Automatic Door Bottom: 420NA - National Guard

302

From **304 Corridor**
To **301 Court Room**

Door:	Frame:	Unit:
3'-0" x 7'-0" x 1 3/4"	3'-4" x 7'-2" x 5 3/4"	Hand: RHR
Acoustical Wood	16 gage	Label: 60 min.
Narrow Light		Glass: 1/4" Wire Glass
	Anchor: Stud Anchor	

Hardware:
3 ea. Hinges: TA2714 4 1/2 x 4 1/2 US26D - McKinney
1 ea. Classroom Lockset: ML2055 - Corbin Russwin
1 ea. Closer: 4111 - LCN
1 ea. Wall Stop: 400 US26D - Rockwood
1 ea. Acoustical Gasket: 134NA - National Guard
1 ea. Automatic Door Bottom: 420NA - National Guard

303

From **304 Corridor**
To **305 Stair**

Door:	Frame:	Unit:
3'-0" x 7'-0" x 1 3/4"	3'-4" x 7'-2" x 5 3/4"	Hand: RH
Wood	16 gage	Label: 60 min.
Narrow Light		Glass: 1/4" Wire Glass
	Anchor: Thru-Bolt Tube Spacer	

Hardware:
3 ea. Hinges: TA2714 4 1/2 x 4 1/2 US26D - McKinney
1 ea. Passage Lockset: ML2010 - Corbin Russwin
1 ea. Closer: 4111 - LCN
1 ea. Wall Stop: 400 US26D - Rockwood

304

From **304 Corridor**
To **308 Toilet**

Door:	Frame:	Unit:
3'-0" x 7'-0" x 1 3/4"	3'-4" x 7'-2" x 5 3/4"	Hand: RH
Wood	16 gage	
Flush		
	Anchor: Thru-Bolt Tube Spacer	

Hardware:
3 ea. Hinges: TA2714 4 1/2 x 4 1/2 US26D - McKinney
1 ea. Privacy Lockset: ML2030 - Corbin Russwin
1 ea. Closer: 4111 - LCN
1 ea. Wall Stop: 400 US26D - Rockwood
2 ea. Kickplate: 12" x D.W.-2" US32D x US18 B3E - Rockwood

305

From **303 Corridor**
To **302 □udge Offi□e**

Door:	Frame:	Unit:
3'-0" x 7'-0" x 1 3/4"	3'-4" x 7'-2" x 5 3/4"	Hand: LH
Acoustical Wood	16 gage	
Full Narrow Light		Glass: 1/4" Tempered
	Anchor: Stud Anchor	

Hardware:
3 ea. Hinges: TA2714 4 1/2 x 4 1/2 US26D - McKinney
1 ea. Classroom Lockset: ML2055 - Corbin Russwin
1 ea. Wall Stop: 400 US26D - Rockwood
1 ea. Acoustical Gasket: 134NA - National Guard
1 ea. Automatic Door Bottom: 420NA - National Guard

306

From **303 Corridor**
To **315 Offi□e**

Door:	Frame:	Unit:
3'-0" x 7'-0" x 1 3/4"	3'-4" x 7'-2" x 5 3/4"	Hand: RH
Wood	16 gage	
Full Narrow Light		Glass: 1/4" Tempered
	Anchor: Stud Anchor	

Hardware:
3 ea. Hinges: TA2714 4 1/2 x 4 1/2 US26D - McKinney
1 ea. Classroom Lockset: ML2055 - Corbin Russwin
1 ea. Wall Stop: 400 US26D - Rockwood

307

From **310 Waiting Al□o□e**
To **30□ Offi□e**

Door:	Frame:	Unit:
3'-0" x 7'-0" x 1 3/4"	3'-4" x 7'-2" x 5 3/4"	Hand: LH
Wood	16 gage	Label: 45 min.
Full Narrow Light		Glass: 1/4" Wire Glass
	Anchor: Stud Anchor	

Hardware:
3 ea. Hinges: TA2714 4 1/2 x 4 1/2 US26D - McKinney
1 ea. Classroom Lockset: ML2055 - Corbin Russwin
1 ea. Closer: 4111 - LCN
1 ea. Wall Stop: 400 US26D - Rockwood

308

From **304 Corridor**
To **335 Data Closet**

Door:	Frame:	Unit:
3'-0" x 7'-0" x 1 3/4"	3'-4" x 7'-2" x 5 3/4"	Hand: LHR
Wood	16 gage	
Flush		
	Anchor: Stud Anchor	

Hardware:
3 ea. Hinges: TA2714 4 1/2 x 4 1/2 US26D - McKinney
1 ea. Storeroom Lockset: ML2057 - Corbin Russwin
1 ea. Closer: 4111-Spring Cush - LCN

309

From **304 Corridor**
To **303 Corridor**

Door:	Frame:	Unit:
3'-0" x 7'-0" x 1 3/4"	3'-4" x 7'-2" x 5 3/4"	Hand: LHR
Wood	16 gage	Label: 45 min.
Flush		
	Anchor: Stud Anchor	

Hardware:
3 ea. Hinges: TA2714 4 1/2 x 4 1/2 US26D - McKinney
1 ea. Storeroom Lockset: ML2057 - Corbin Russwin
1 ea. Closer: 4111-Spring Cush - LCN
1 ea. Electric Strike: 6210 - Von Duprin
1 ea. Magnetic Switch: MS 766 - Von Duprin
1 ea. Power Supply: PS-873BK 24VDC - Von Duprin

310

From **303 Corridor**
To **317 □ur□**

Door:	Frame:	Unit:
3'-0" x 7'-0" x 1 3/4"	3'-4" x 7'-2" x 5 3/4"	Hand: LH
Acoustical Wood	16 gage	
Flush		
	Anchor: Stud Anchor	

Hardware:
3 ea. Hinges: TA2714 4 1/2 x 4 1/2 US26D - McKinney
1 ea. Classroom Lockset: ML2055 - Corbin Russwin
1 ea. Closer: 4111 - LCN
1 ea. Wall Stop: 400 US26D - Rockwood
1 ea. Acoustical Gasket: 134NA - National Guard
1 ea. Automatic Door Bottom: 420NA - National Guard

311

From **317 □ur□**
To **316 Closet**

Door:	Frame:	Unit:
3'-0" x 7'-0" x 1 3/4"	3'-4" x 7'-2" x 5 3/4"	Hand: LHR
Wood	16 gage	
Flush		
	Anchor: Stud Anchor	

Hardware:
3 ea. Hinges: TA2714 4 1/2 x 4 1/2 US26D - McKinney
1 ea. Passage Lockset: ML2010 - Corbin Russwin
1 ea. Wall Stop: 400 US26D - Rockwood

312

From **317 □ur□**
To **318 Toilet**

Door:	Frame:	Unit:
3'-0" x 7'-0" x 1 3/4"	3'-4" x 7'-2" x 5 3/4"	Hand: LHR
Wood	16 gage	
Flush		
	Anchor: Stud Anchor	

Hardware:
3 ea. Hinges: TA2714 4 1/2 x 4 1/2 US26D - McKinney
1 ea. Privacy Lockset: ML2030 - Corbin Russwin
1 ea. Closer: 4111-Spring Cush - LCN
2 ea. Kickplate: 12" x D.W.-2" US32D x US18 B3E - Rockwood

313

From **303 Corridor**
To **31□ Closet**

Door:	Frame:	Unit:
3'-0" x 7'-0" x 1 3/4"	3'-4" x 7'-2" x 5 3/4"	Hand: LHR
Wood	16 gage	
Flush Pair		
	Anchor: Stud Anchor	

Hardware:
6 ea. Hinges: TA2714 4 1/2 x 4 1/2 US26D - McKinney
2 ea. Half Dummy Lockset: ML2050 - Corbin Russwin
2 ea. Overhead Stop: 410S-US32D - Glynn-Johnson
1 ea. Roller Latch: 23 31-0270 - Stanley

314

From **304 Corridor**
To **311 Conferen□e Room**

Door:	Frame:	Unit:
3'-0" x 7'-0" x 1 3/4"	3'-4" x 7'-2" x 5 3/4"	Hand: LH
Wood	16 gage	Label: 45 min.
Flush		
	Anchor: Stud Anchor	

Hardware:
3 ea. Hinges: TA2714 4 1/2 x 4 1/2 US26D - McKinney
1 ea. Classroom Lockset: ML2055 - Corbin Russwin
1 ea. Closer: 4111 - LCN
1 ea. Wall Stop: 400 US26D - Rockwood

315

From **303 Corridor**
To **321 O□en Offi□e**

Door:	Frame:	Unit:
3'-0" x 7'-0" x 1 3/4"	3'-4" x 7'-2" x 5 3/4"	Hand: RHR
Wood	16 gage	Label: 45 min.
Flush		
	Anchor: Stud Anchor	

Hardware:
3 ea. Hinges: TA2714 4 1/2 x 4 1/2 US26D - McKinney
1 ea. Storeroom Lockset: ML2057 - Corbin Russwin
1 ea. Closer: 4111-Spring Cush - LCN
1 ea. Electric Strike: 6210 - Von Duprin
1 ea. Magnetic Switch: MS 766 - Von Duprin
1 ea. Power Supply: PS-873BK 24VDC - Von Duprin

316

From **321 O□en Offi□e**
To **322 Offi□e**

Door:	Frame:	Unit:
3'-0" x 7'-0" x 1 3/4"	3'-4" x 7'-2" x 5 3/4"	Hand: RH
Wood	16 gage	
Half Light		Glass: 1/4" Tempered
	Anchor: Stud Anchor	

Hardware:
3 ea. Hinges: TA2714 4 1/2 x 4 1/2 US26D - McKinney
1 ea. Classroom Lockset: ML2055 - Corbin Russwin
1 ea. Wall Stop: 400 US26D - Rockwood

317

From **321 O□en Offi□e**
To **324 Offi□e**

Door:	Frame:	Unit:
3'-0" x 7'-0" x 1 3/4"	9'-4" x 7'-2" x 5 3/4"	Hand: LH
Wood	16 gage	
Half Light	01 G/A413	Glass: 1/4" Tempered
	Anchor: Stud Anchor	

Hardware:
3 ea. Hinges: TA2714 4 1/2 x 4 1/2 US26D - McKinney
1 ea. Classroom Lockset: ML2055 - Corbin Russwin
1 ea. Wall Stop: 400 US26D - Rockwood

318

From **304 Corridor**
To **323 La□ Li□rar□**

Door:	Frame:	Unit:
3'-0" x 7'-0" x 1 3/4"	3'-4" x 7'-2" x 5 3/4"	Hand: LH
Wood	16 gage	Label: 45 min.
Flush		
	Anchor: Stud Anchor	

Hardware:
3 ea. Hinges: TA2714 4 1/2 x 4 1/2 US26D - McKinney
1 ea. Classroom Lockset: ML2055 - Corbin Russwin
1 ea. Closer: 4111 - LCN
1 ea. Wall Stop: 400 US26D - Rockwood
1 ea. Electric Strike: 6210 - Von Duprin
1 ea. Magnetic Switch: MS 766 - Von Duprin
1 ea. Power Supply: PS-873BK 24VDC - Von Duprin

319

From **304 Corridor**
To **325 Waiting Room**

Door:	Frame:	Unit:
3'-0" x 7'-0" x 1 3/4"	3'-4" x 7'-2" x 5 3/4"	Hand: LH
Wood	16 gage	Label: 45 min.
Flush		
	Anchor: Stud Anchor	

Hardware:
3 ea. Hinges: TA2714 4 1/2 x 4 1/2 US26D - McKinney
1 ea. Classroom Lockset: ML2055 - Corbin Russwin
1 ea. Closer: 4111 - LCN
1 ea. Wall Stop: 400 US26D - Rockwood

320

From **325 Waiting Room**
To **326 Corridor**

Door:	Frame:	Unit:
3'-0" x 7'-0" x 1 3/4"	3'-4" x 7'-2" x 5 3/4"	Hand: LH
Wood	16 gage	
Flush		
	Anchor: Stud Anchor	

Hardware:
3 ea. Hinges: TA2714 4 1/2 x 4 1/2 US26D - McKinney
1 ea. Storeroom Lockset: ML2057 - Corbin Russwin
1 ea. Wall Stop: 400 US26D - Rockwood
1 ea. Electric Strike: 6210 - Von Duprin
1 ea. Magnetic Switch: MS 766 - Von Duprin
1 ea. Power Supply: PS-873BK 24VDC - Von Duprin

321

From **326 Corridor**
To **328 Inter□ie□**

Door:	Frame:	Unit:
3'-0" x 7'-0" x 1 3/4"	3'-4" x 7'-2" x 5 3/4"	Hand: RH
Acoustical Wood	16 gage	
Flush		
	Anchor: Stud Anchor	

Hardware:
3 ea. Hinges: TA2714 4 1/2 x 4 1/2 US26D - McKinney
1 ea. Classroom Lockset: ML2055 - Corbin Russwin
1 ea. Wall Stop: 400 US26D - Rockwood
1 ea. Acoustical Gasket: 134NA - National Guard
1 ea. Automatic Door Bottom: 420NA - National Guard

322

From **331 Stair**
To **334 Files**

Door:	Frame:	Unit:
3'-0" x 7'-0" x 1 3/4"	3'-4" x 7'-2" x 5 3/4"	Hand: RH
Wood	16 gage	Label: 60 min.
Flush		
	Anchor: Stud Anchor	

Hardware:
3 ea. Hinges: TA2714 4 1/2 x 4 1/2 US26D - McKinney
1 ea. Storeroom Lockset: ML2057 - Corbin Russwin
1 ea. Closer: 4111-Spring Cush - LCN
1 ea. Electric Strike: 6210 - Von Duprin
1 ea. Magnetic Switch: MS 764 - Von Duprin
1 ea. Power Supply: PS-873BK 24VDC - Von Duprin

323

From **304 Corridor**
To **331 Stair**

Door:	Frame:	Unit:
3'-0" x 7'-0" x 1 3/4"	3'-4" x 7'-2" x 5 3/4"	
Wood	16 gage	Label: 60 min.
Narrow Light		Glass: 1/4" Wire Glass
	Anchor: Stud Anchor	

Hardware:
3 ea. Hinges: TA2714 4 1/2 x 4 1/2 US26D - McKinney
1 ea. Passage Lockset: ML2010 - Corbin Russwin
1 ea. Closer: 4111-Spring Cush - LCN

324

From **326 Corridor**
To **32□ Offi□e**

Door:	Frame:	Unit:
3'-0" x 7'-0" x 1 3/4"	3'-4" x 7'-2" x 5 3/4"	Hand: RH
Wood	16 gage	
Full Narrow Light		Glass: 1/4" Tempered
	Anchor: Stud Anchor	

Hardware:
3 ea. Hinges: TA2714 4 1/2 x 4 1/2 US26D - McKinney
1 ea. Classroom Lockset: ML2055 - Corbin Russwin
1 ea. Wall Stop: 400 US26D - Rockwood

325

From **332 Staff Room**
To **333 Stair**

Door:	Frame:	Unit:
3'-0" x 7'-0" x 1 3/4"	3'-4" x 7'-2" x 5 3/4"	Hand: LH
Wood	16 gage	Label: 60 min.
Narrow Light		Glass: 1/4" Wire Glass
	Anchor: Stud Anchor	

Hardware:
3 ea. Hinges: TA2714 4 1/2 x 4 1/2 US26D - McKinney
1 ea. Storeroom Lockset: ML2057 - Corbin Russwin
1 ea. Closer: 4111 - LCN
1 ea. Wall Stop: 400 US26D - Rockwood
1 ea. Electric Strike: 6210 - Von Duprin
1 ea. Magnetic Switch: MS 766 - Von Duprin
1 ea. Power Supply: PS-873BK 24VDC - Von Duprin

326

From **326 Corridor**
To **330 Offi□e**

Door:	Frame:	Unit:
3'-0" x 7'-0" x 1 3/4"	3'-4" x 7'-2" x 5 3/4"	
Wood	16 gage	
Full Narrow Light		Glass: 1/4" Tempered
	Anchor: Stud Anchor	

Hardware:
3 ea. Hinges: TA2714 4 1/2 x 4 1/2 US26D - McKinney
1 ea. Classroom Lockset: ML2055 - Corbin Russwin
1 ea. Wall Stop: 400 US26D - Rockwood

327

From **E□terior**
To **301 Court Room**

Door:	Frame:	Unit:
3'-0" x 7'-0" x 1 3/4"	3'-4" x 7'-2" x 5 3/4"	Hand: RHR
Wood	16 gage	
Flush		
	Anchor: Stud Anchor	

Hardware:
3 ea. Hinges: TA2714 4 1/2 x 4 1/2 US26D - McKinney
1 ea. Storeroom Lockset: ML2057 - Corbin Russwin
1 ea. Closer: 4111-Spring Cush - LCN
1 ea. Magnetic Switch: MS 766 - Von Duprin
1 ea. Sweep: 600A - National Guard
1 ea. Weather Seal: 130NA - National Guard
1 ea. Threshold: 896N - National Guard

328

From **304 Corridor**
To **338 □anitor**

Door:	Frame:	Unit:
3'-0" x 7'-0" x 1 3/4"	3'-4" x 7'-2" x 5 3/4"	Hand: LH
Wood	16 gage	
Flush		
	Anchor: Stud Anchor	

Hardware:
3 ea. Hinges: TA2714 4 1/2 x 4 1/2 US26D - McKinney
1 ea. Storeroom Lockset: ML2057 - Corbin Russwin
1 ea. Closer: 4111 - LCN
1 ea. Wall Stop: 400 US26D - Rockwood
1 ea. Kickplate: 12" x D.W.-2" US32D x US18 B3E - Rockwood

329

From **306 Corridor**
To **301 Court Room**

Door:	Frame:	Unit:	
3'-0" x 7'-0" x 1 3/4"	3'-4" x 7'-2" x 5 3/4"	Hand:	LHR
Acoustical Wood	16 gage	Label:	60 min.
Flush			
	Anchor: Thru-Bolt Tube Spacer		

Hardware:
3 ea. Hinges: TA2714 4 1/2 x 4 1/2 US26D - McKinney
1 ea. Storeroom Lockset: ML2057 - Corbin Russwin
1 ea. Closer: 4111 - LCN
1 ea. Wall Stop: 400 US26D - Rockwood
1 ea. Electric Strike: 6210 - Von Duprin
1 ea. Magnetic Switch: MS 766 - Von Duprin
1 ea. Power Supply: PS-873BK 24VDC - Von Duprin
1 ea. Acoustical Gasket: 134NA - National Guard
1 ea. Automatic Door Bottom: 420NA - National Guard

601

From **312 Se□urit□ Vesti□ule**
To **306 Corridor**

Door:	Frame:	Unit:	
3'-0" x 7'-0" x 2"	3'-10" x 7'-4" x 8"	Hand:	LHR
14 gage	14 gage		
Flush			
	Anchor: Masonry Yoke		
	Intercom Prep		

Hardware:
3 ea. Hinges: 204FM - Southern Steel
1 ea. Electric Lock: 10120AM-2 - Southern Steel
1 ea. Closer: 4211T - LCN
1 ea. Floor Stop: 463 - Rockwood
1 ea. Door Position Switch: 220A - Southern Steel
1 ea. Raised Pull: 212C - Southern Steel

602

From **312 Se□urit□ Vesti□ule**
To **336 Closet**

Door:	Frame:	Unit:	
3'-0" x 7'-0" x 2"	3'-4" x 7'-4" x 8"	Hand:	RHR
14 gage	14 gage		
Flush			
	Anchor: Masonry Yoke		

Hardware:
3 ea. Hinges: 204FM - Southern Steel
1 ea. Mortise Lock: 10500 series - Southern Steel
1 ea. Floor Stop: 463 - Rockwood

603

From **313 Court Holding**
To **312 Se□urit□ Vesti□ule**

Door:	Frame:	Unit:
3'-0" x 7'-0" x 2"	3'-10" x 7'-4" x 8"	Hand: LHR
14 gage	14 gage	
Flush		
	Anchor: Masonry Yoke	
	Intercom Prep	

Hardware:
3 ea. Hinges: 204FM - Southern Steel
1 ea. Electric Lock: 10120AM-2 - Southern Steel
1 ea. Closer: 4211T - LCN
1 ea. Floor Stop: 463 - Rockwood
1 ea. Door Position Switch: 220A - Southern Steel
1 ea. Raised Pull: 212C - Southern Steel

604

From **314 Corridor**
To **313 Court Holding**

Door:	Frame:	Unit:
3'-0" x 7'-0" x 2"	3'-10" x 7'-4" x 8"	Hand: RHR
14 gage	14 gage	
Narrow Light		Glass: Max. Sec.
	Anchor: Thru-Bolt Tube Spacer	
	Intercom Prep	

Hardware:
3 ea. Continuous Hinge: FM-3500 x HT - Markar Products
1 ea. Electric Lock: 10120AM-2 - Southern Steel
1 ea. Closer: 4211T - LCN
1 ea. Floor Stop: 463 - Rockwood
1 ea. Door Position Switch: 220A - Southern Steel
1 ea. Raised Pull: 212C - Southern Steel

605

From **265 Stair**
To **246 Corridor**

Door:	Frame:	Unit:
3'-0" x 7'-0" x 2"	3'-4" x 7'-4" x 8"	Hand: LHR
14 gage	14 gage	Label: 60 min.
Flush		
	Anchor: Thru-Bolt Tube Spacer	

Hardware:
3 ea. Hinges: 204FM - Southern Steel
1 ea. Mortise Lock: 10500 series - Southern Steel
1 ea. Closer: 4511T - LCN
1 ea. Floor Stop: 463 - Rockwood

Job Number: 10-007

APPENDIX B

ROOM FINISH SCHEDULE

Room Finish Schedule

See floor finish plan, reflected ceiling plan and interior elevations for additional information, wood wall treatment and millwork details.

Scribe VCT tight to wall in inmate areas install detention sealant at joint of VCT and wall tool concave.

Ceilings finish indicated as paint or epoxy paint only shall be painting of exposed construction.

Ceilings indicated as hard ceilings (HD) shall be painted with epoxy paint.

Ceiling indicated as gypsum board (GB) shall be painted.

Refer to drawings I201, I202, I203 fo extent of new ceilings and locations of bulkheads to be painted.

All doors, frames, unfinished equipment, unfinished furnishings, shop fabricated metal items interior and exterior require painting. Thoroughly examine project documents and manufacturer's product information to determine the extent of painting requirements.

Closets, alcoves, nooks, etc. not named and numbered shall have the same finishes as the adjoining room.

Base shall be installed continuously around perimeter of floor along wall and toe space of casework.

Install plastic laminate backsplash from countertop to underside of wall cabinet.

Refer to drawings for corner guard locations if applicable.

AC-1	Suspended Acoustic 1	AC-2	Suspended Acoustic 2	AC-3	Suspended Acoustic 3	AC-4	Suspended Acoustic 4
AWC-1	Acoustic Wallcovering	BASE	Base- Multiple types	c2ABC	Ceramic Wall Tile 2A,B,C	CMB-2A	Ceramic Mosaic Base 2A
CMT-2A	Ceramic Mosaic 2A	CPT-1	Carpet 1	CPT-2	Carpet 2	CPT-3	Carpet 3
CPT-4	Carpet 4	CPT-5	Carpet 5	CPTB	Carpet Base	EP-2A	Epoxy Paint 2A
EP-2B	Epoxy Paint 2B	EP-4	Epoxy Paint 4	EX	Existing	P-1A	Paint 1A
P-1B	Paint 1B	p1B-1C	Paver Tile 1B & 1C	P-1C	Paint 1C	PR-1	Patch & Repair
PTB-1	Paver Tile Base 1	PVT-1A	Paver Tile 1A	RB-1A	Rubber Base 1A	RB-2A	Rubber Base 2A
RST	Rubber Stair Treads & Risers	v1B-1C	Vinyl Composite Tile 1B & 1C	VCT-1A	Vinyl Composite Tile 1A		

		Floors			Walls						Laminates			Hollow Metal		
Number	Name	Field	Accent	Base	E Wall	S Wall	W Wall	N Wall	Ceiling	Height	Counter	Cabinet	Sills	Doors	Frames	Notes Key
					Wainscot or Accent											
					E Wall	S Wall	W Wall	N Wall								
101	Mechanical Room	EX														

Number	Name	Floors		Base	Walls				Ceiling	Height	Laminates			Hollow Metal		Notes Key
		Field	Accent		E Wall	S Wall	W Wall	N Wall			Counter	Cabinet	Sills	Doors	Frames	
					Wainscot or Accent											
					E Wall	S Wall	W Wall	N Wall								
102	Storage	EX														
103	Stair	EX														
104	Tunnel	EX														
105	Electrical Room	EX														
106	Storage	EX														
107	Storage	EX														
108	Storage	EX														
109	Corridor	EX	CPT-1	BASE	P-1A	P-1A	P-1A		PR-1							Paint areas of new construction - patch and repair other
110	Toilet Room	EX														
111	Tool Room	EX														

Number	Name	Floors		Base	Walls				Ceiling	Height	Laminates			Hollow Metal		Notes Key
		Field	Accent		E Wall	S Wall	W Wall	N Wall			Counter	Cabinet	Sills	Doors	Frames	
					Wainscot or Accent											
					E Wall	S Wall	W Wall	N Wall								
112	Stair	PR-1			P-1B	P-1A	P-1A	P-1A								
113	Storage	EX														
114	Vault	EX														
115	Storage	EX														
116	Not Used	EX														
117	Vault	EX														
118	Vault	EX														
119	Breakroom	EX														
120	Pantry	EX														
121	Toilet Room	EX														
122	Storage	EX														

Number	Name	Floors		Base	Walls				Ceiling	Height	Laminates			Hollow Metal		Notes Key
		Field	Accent		E Wall	S Wall	W Wall	N Wall			Counter	Cabinet	Sills	Doors	Frames	
					Wainscot or Accent											
					E Wall	S Wall	W Wall	N Wall								
123	Storage	EX														
124	Not Used															
125	Storage	EX														
126	Elevator Equipment	EX														
127	Storage	EX														
128	Elevator	CPT-1														
129	Electrical	EX													EP-1	
130	Storage	PR-1		RB-2A	EP-2A		EP-2A		EX						EP-1	Painting of new construction - patch and repair other
131	Corridor	CPT-1		CPTB	EP-2A	EP-2A	EP-2A	EP-2A	AC-2						EP-1	
132	Stair	PR-1			EP-2A	EP-2A	EP-2A	EP-2A	AC-1						EP-1	
133	Storage	PR-1		RB-2A			EP-2A		EX						EP-1	

Number	Name	Floors		Base	Walls				Ceiling	Height	Laminates			Hollow Metal		Notes Key
		Field	Accent		E Wall	S Wall	W Wall	N Wall			Counter	Cabinet	Sills	Doors	Frames	
					Wainscot or Accent											
					E Wall	S Wall	W Wall	N Wall								
134	Women's Locker Room	CPT-2		CPTB	EP-2B	EP-2A	EP-2A	EP-2A	EP-4						EP-1	lockers
135	Women's Shower Room	CMT-2A		CMB-2A	c2ABC	c2ABC	c2ABC	c2ABC	EP-4							
136	Women's Toilet Room	CMT-2A		CMB-2A	EP-2A	EP-2A	EP-2A	EP-2A	EP-4						EP-1	Refer to drawing I104 for wall tile height 5' 9" +- and pattern
					c2ABC	c2ABC	c2ABC	c2ABC								
137	Men's Toilet Room	CMT-2A		CMB-2A	EP-2A	EP-2A	EP-2A	EP-2A	EP-4						EP-1	Refer to drawing I104 for wall tile height 5' 9" +- and pattern
					c2ABC	c2ABC	c2ABC	c2ABC								
138	Men's Shower Room	CMT-2A		CMB-2A	c2ABC	c2ABC	c2ABC	c2ABC	EP-4							
139	Men's Locker Room	CPT-2		CPTB	EP-2B	EP-2A	EP-2A	EP-2A	EP-4						EP-1	
140	Vault	EX														
141	Storage	EX														
142	Stair	RST	VCT-1A	BASE	EP-2A	EP-2A	EP-2A	EP-2A	AC-2						EP-1	new treads & risers

Number	Name	Floors		Base	Walls				Ceiling	Height	Laminates			Hollow Metal		Notes Key
		Field	Accent		E Wall	S Wall	W Wall	N Wall			Counter	Cabinet	Sills	Doors	Frames	
					Wainscot or Accent											
					E Wall	S Wall	W Wall	N Wall								
201	FOC Director	CPT-5		CPTB	P-1B	P-1A	P-1A	P-1A	AC-2						EP-1	
202	Open Office	CPT-2		CPTB	P-1B	P-1A	P-1A	P-1B	AC-2		PL-2	PL-1			EP-1	
203	Enf Office	CPT-5		CPTB	P-1B	P-1A	P-1A	P-1A	AC-2						EP-1	
204	Closet	CPT-5		CPTB	P-1A	P-1A	P-1A	P-1A	AC-2						EP-1	shelf ??
205	Secure Files	CPT-2		CPTB	P-1A	P-1A	P-1A	P-1A	AC-2		PL-2	PL-1			EP-1	
206	Closet															
207	Conference Room	CPT-3		CPTB	P-1B	P-1A	P-1A	P-1A	AC-2						EP-1	white board
208	Office	CPT-5		CPTB	P-1B	P-1A	P-1A	P-1B	AC-2						EP-1	
209	Files	CPT-2		CPTB	P-1A	P-1A	P-1A	P-1A	AC-2						EP-1	
210	Office	CPT-2		CPTB	P-1A	P-1A	P-1A	P-1B	AC-2						EP-1	
211	Office	CPT-2		CPTB	P-1A	P-1A	P-1A	P-1B	AC-2						EP-1	

Number	Name	Floors		Base	Walls				Ceiling	Height	Laminates			Hollow Metal		Notes Key
		Field	Accent		E Wall	S Wall	W Wall	N Wall			Counter	Cabinet	Sills	Doors	Frames	
					Wainscot or Accent											
					E Wall	S Wall	W Wall	N Wall								
212	Corridor	CPT-2		CPTB	P-1A	P-1A	P-1A	P-1B	AC-2						EP-1	
213	Conference Room	CPT-3	CPT-4	CPTB	P-1A	P-1A	P-1B	P-1B	AC-2						EP-1	white board, tack board
214	Witness Waiting Room	CPT-2		CPTB	P-1B	P-1A	P-1A	P-1B	AC-2		PL-2				EP-1	
215	Open Office	CPT-2		CPTB	P-1A	P-1A	P-1B	P-1B	AC-2		PL-2				EP-1	
216	Vestibule	EX		EX	EP-2A	EP-2A	EP-2A	EP-2A	PR-1						EP-1	existing gold glazed brick/tile
217	Corridor	CPT-1		CPTB	P-1A	P-1A	P-1C	P-1C	AC-2						EP-1	
218	Stair	EX			EP-2B	EP-2A	EP-2A	EP-2A	AC-2						EP-1	
219	Men's Toilet Room	PVT-1A	p1B-1C	PTB-1	c2ABC	c2ABC	c2ABC	c2ABC	AC-3						EP-1	toilet partitions
220	Women's Toilet Room	PVT-1A	p1B-1C	PTB-1	c2ABC	c2ABC	c2ABC	c2ABC	AC-3						EP-1	toilet partitions
221	Corridor	CPT-1	PVT-1A	BASE	P-1A	P-1A	P-1C	P-1C	AC-2						EP-1	EWC - paver tile at walls and floor
					PVT-1A											

Number	Name	Floors		Base	Walls				Ceiling	Height	Laminates			Hollow Metal		Notes Key
		Field	Accent		E Wall	S Wall	W Wall	N Wall			Counter	Cabinet	Sills	Doors	Frames	
					Wainscot or Accent											
					E Wall	S Wall	W Wall	N Wall								
222	Corridor	CPT-2		CPTB	P-1A	P-1A	P-1A	P-1A	AC-2		PL-2				EP-1	
223	Office	CPT-2		CPTB	P-1A	P-1A	P-1B	P-1A	AC-2						EP-1	
224	Office	CPT-2		CPTB	P-1A	P-1A	P-1A	P-1B	AC-2						EP-1	
225	Office	CPT-2		CPTB	P-1A	P-1A	P-1A	P-1A	AC-2						EP-1	
226	Future															
227	Vestibule	PVT-1A	p1B-1C	PTB-1	EP-2A	EP-2A	EP-2A	EP-2A	AC-3						EP-1	
228	Waiting Room	CPT-2		CPTB	P-1A	P-1A	P-1B	P-1A	AC-2		PL-2				EP-1	
229	Closet	CPT-2		CPTB	P-1A	P-1A	P-1A	P-1A	AC-2						EP-1	shelf
230	Office	CPT-2		CPTB	P-1A	P-1A	P-1B	P-1A	AC-2						EP-1	
231	Open Office	CPT-2		CPTB	P-1A	P-1A	P-1A	P-1A	AC-2		PL-2				EP-1	
232	Office	EX														

Number	Name	Floors		Base	Walls				Ceiling	Height	Laminates			Hollow Metal		Notes Key
		Field	Accent		E Wall	S Wall	W Wall	N Wall			Counter	Cabinet	Sills	Doors	Frames	
					Wainscot or Accent											
					E Wall	S Wall	W Wall	N Wall								
233	Office	EX														
234	Office	EX														
235	Office	EX														
236	Holding	EX														
237	Holding	EX														
238	Open Office	EX														
239	Toilet Room	CMT-2A		CMB-2A	EP-2B	EP-2B	EP-2B	EP-2B	AC-3						EP-1	Refer to drawing I104 for wall tile height 5' 9" +- and pattern
					c2ABC	c2ABC	c2ABC	c2ABC								
240	Office	CPT-2		CPTB	P-1A	P-1A	P-1B	P-1A	AC-2						EP-1	
241	Office	CPT-2		CPTB	P-1A	P-1A	P-1B	P-1A	AC-2						EP-1	
242	Office	CPT-5		CPTB	P-1A	P-1B	P-1B	P-1A	AC-2						EP-1	
243	Files	CPT-2		CPTB	P-1A	P-1A	P-1A	P-1A	AC-2						EP-1	

Number	Name	Floors		Base	Walls				Ceiling	Height	Laminates			Hollow Metal		Notes Key
		Field	Accent		E Wall	S Wall	W Wall	N Wall			Counter	Cabinet	Sills	Doors	Frames	
					Wainscot or Accent											
					E Wall	S Wall	W Wall	N Wall								
244	Open Office	CPT-2		CPTB	P-1B	P-1A	P-1A	P-1B	AC-2						EP-1	use same finishes in waiting room
245	Stair	PR-1			EP-2A	EP-2B	EP-2A	EP-2A	AC-2						EP-1	
246	Corridor	CPT-1		CPTB	EP-2A	EP-2A	EP-2A	EP-2A	AC-2						EP-1	
247	Electrical	EX														
248	Closet	EX														
249	Closet	EX														
250	Closet	EX														
251	Office	EX														
252	Office	EX														
253	Corridor	EX														
254	Office	EX														

Number	Name	Floors		Base	Walls				Ceiling	Height	Laminates			Hollow Metal		Notes Key
		Field	Accent		E Wall	S Wall	W Wall	N Wall			Counter	Cabinet	Sills	Doors	Frames	
					Wainscot or Accent											
					E Wall	S Wall	W Wall	N Wall								
255	Toilet	EX							AC-3						EP-1	
256	Toilet	CMT-2A		CMB-2A	c2ABC	c2ABC	c2ABC	c2ABC	AC-3						EP-1	
257	Corridor	CPT-2		CPTB	P-1A	P-1A	P-1A	P-1A	AC-2						EP-1	
258	Stair	RST	VCT-1A	BASE	EP-2A	EP-2A	EP-2A	EP-2A	AC-2						EP-1	Rubber Stair Treads and Risers
259	Office	EX														
260	Closet	EX														
261	Closet	EX														
262	Breakroom	PVT-1A	p1B-1C	PTB-1	P-1A	P-1A	P-1B	P-1A			PL-2	PL-1			EP-1	plastic laminate backsplash from counter top to underside of upper cabinets
263	Closet	CPT-2		CPTB	P-1A	P-1A	P-1A	P-1A	AC-2						EP-1	
264	Open Office	CPT-2		CPTB	P-1A	P-1A	P-1A	P-1A	AC-2		PL-2	PL-1			EP-1	

Number	Name	Floors		Base	Walls				Ceiling	Height	Laminates			Hollow Metal		Notes Key
		Field	Accent		E Wall	S Wall	W Wall	N Wall			Counter	Cabinet	Sills	Doors	Frames	
					Wainscot or Accent											
					E Wall	S Wall	W Wall	N Wall								
265	Stair	EX														
266	Janitor	EX														
267	Toilet	CMT-2A		CMB-2A	c2ABC	c2ABC	c2ABC	c2ABC	AC-3						EP-1	
268	Existing Interview	EX							AC-4						EP-1	
269	Toilet	EX														
270	Vestibule	EX			EP-2A	EP-2A	EP-2A	EP-2A	AC-3						EP-1	
271	Corridor				PR-1										EP-1	
272	Interview Equipment	EX							AC-2							
273	Existing	EX							AC-2							
274	Information Services	CPT-2		CPTB	P-1B	P-1A	P-1A	P-1A	AC-2							
275	New Evidence Processing	VCT-1A		RB-2A	EP-2A	EP-2A	EP-2A	EP-2A	AC-1		PL-2				EP-1	

Number	Name	Floors		Base	Walls				Ceiling	Height	Laminates			Hollow Metal		Notes Key
		Field	Accent		E Wall	S Wall	W Wall	N Wall			Counter	Cabinet	Sills	Doors	Frames	
					Wainscot or Accent											
					E Wall	S Wall	W Wall	N Wall								
276	Vestibule	VCT-1A	v1B-1C	RB-1A	EP-2A	EP-2A	EP-2A	EP-2A							EP-1	
277	Existing Storage	VCT-1A		RB-1A	EP-2A	EP-2A	EP-2A	EP-2A							EP-1	
278	Existing Office	CPT-2		CPTB	EP-2B	EP-2A	EP-2A	EP-2A	AC-1						EP-1	Use existing ceiling grid with new pads-verify size
279	New Interview	CPT-2		CPTB	AWC-1	AWC-1	AWC-1	AWC-1	AC-4						EP-1	
280	Corridor	VCT-1A	v1B-1C	RB-1A	EP-2A	EP-2A	EP-2A	EP-2B	AC-1						EP-1	
281	Existing Office	CPT-2		CPTB	EP-2B	EP-2A	EP-2A	EP-2A	AC-1						EP-1	Use existing ceiling grid with new pads -verify size
282	Vestibule	EX						PR-1							EP-1	
282	Not Used															
283	Existing County Jail	EX														
283	Not Used															

Number	Name	Floors		Base	Walls				Ceiling	Height	Laminates			Hollow Metal		Notes Key
		Field	Accent		E Wall	S Wall	W Wall	N Wall			Counter	Cabinet	Sills	Doors	Frames	
					Wainscot or Accent											
					E Wall	S Wall	W Wall	N Wall								
284	Not Used															
284	Corridor	EX													EP-1	
285	Corridor															
285	Corridor	EX						PR-1							EP-1	
286	Work Area	CPT-2		CPTB	P-1A	P-1A	P-1A	P-1A	AC-2						EP-1	
286	Not Used															
287	Not Used															
287	Data Room	VCT-1A		RB-1A	EP-2A	EP-2A	EP-2A	EP-2A	AC-2						EP-1	Install Non Combustible Plywood ay walls
288	Not Used															
288	Waiting	CPT-2		CPTB	P-1A	P-1A	P-1A	P-1A	AC-2		PL-2				EP-1	
289	Stair	EX														

Number	Name	Floors		Base	Walls				Ceiling	Height	Laminates			Hollow Metal		Notes Key
		Field	Accent		E Wall	S Wall	W Wall	N Wall			Counter	Cabinet	Sills	Doors	Frames	
					Wainscot or Accent											
					E Wall	S Wall	W Wall	N Wall								
301	Court Room	CPT-3		CPTB	P-1A	P-1C	P-1C	P-1A	AC-4		PL-2	PL-1			EP-1	wainscot paint above/below wood chair raail wood wall behind bench
					P-1B	P-1B	P-1B	P-1B								
302	Judge Office	CPT-5		CPTB	P-1A	P-1A	P-1C	P-1A	AC-4						EP-1	
303	Corridor	CPT-2		CPTB	P-1A	P-1A	P-1B	P-1A	AC-2						EP-1	
304	Corridor	CPT-1	CPT-4	CPTB	P-1A	P-1A	P-1B	P-1C	AC-2		PL-1				EP-1	paver tile at ewc floor and wall enclosure
							PVT-1A									
305	Stair				EP-2B	EP-2A	EP-2A	EP-2A	AC-2						EP-1	
306	Corridor	VCT-1A		RB-2A	EP-2A	EP-2A	EP-2A	EP-2A	EP-4						EP-1	
307	Vault	CPT-2		CPTB	P-1A	P-1A	P-1A	P-1A	AC-1						EP-1	
308	Toilet	EX														
309	Office	CPT-2		CPTB	P-1B	P-1A	P-1A	P-1A	AC-2						EP-1	
310	Waiting Alcove	CPT-1		CPTB	P-1A	P-1A	P-1A	P-1A	AC-2						EP-1	

Number	Name	Floors		Base	Walls				Ceiling	Height	Laminates			Hollow Metal		Notes Key
		Field	Accent		E Wall	S Wall	W Wall	N Wall			Counter	Cabinet	Sills	Doors	Frames	
					Wainscot or Accent											
					E Wall	S Wall	W Wall	N Wall								
311	Conference Room	CPT-3	CPT-4	CPTB	P-1B	P-1A	P-1A	P-1A	AC-2						EP-1	white board, tack board
312	Security Vestibule	VCT-1A		RB-2A	EP-2A	EP-2A	EP-2A	EP-2A	EP-4						EP-1	carry finishes into closet
313	Court Holding	VCT-1A	v1B-1C	RB-2A	EP-2A	EP-2A	EP-2A	EP-2A	EP-4						EP-1	fixed bench
314	Corridor	PR-1						PR-1								patch and repair as required
315	Office	CPT-2		CPTB	P-1A	P-1A	P-1B	P-1A	AC-2						EP-1	
316	Closet	CPT-3		CPTB	P-1A	P-1A	P-1A	P-1A	AC-4						EP-1	
317	Jury	CPT-3	p1B-1C	BASE	P-1A	P-1B	P-1B	P-1A	AC-4		PL-2	PL-1				white board, tack board
318	Toilet	PVT-1A	p1B-1C	PTB-1	P-1B	P-1B	P-1B	P-1B	AC-3						EP-1	Refer to drawing I104 for wall tile height 5' 9" +- and pattern
					c2ABC	c2ABC	c2ABC	c2ABC								
319	Closet	CPT-2		CPTB	P-1A	P-1A	P-1A	P-1A	AC-2						EP-1	
320	Vault	CPT-2		CPTB	P-1A	P-1A	P-1A	P-1A	AC-2						EP-1	

Number	Name	Floors		Base	Walls				Ceiling	Height	Laminates			Hollow Metal		Notes Key
		Field	Accent		E Wall	S Wall	W Wall	N Wall			Counter	Cabinet	Sills	Doors	Frames	
					Wainscot or Accent											
					E Wall	S Wall	W Wall	N Wall								
321	Open Office	CPT-2		CPTB	P-1A	P-1A	P-1B	P-1A	AC-2		PL-2				EP-1	
322	Office	CPT-2		CPTB	P-1A	P-1B	P-1A	P-1A	AC-2						EP-1	
323	Law Library	CPT-3		CPTB	P-1B	P-1B	P-1B	P-1B	AC-2						EP-1	
324	Office	CPT-2		CPTB	P-1A	P-1A	P-1B	P-1A	AC-2						EP-1	
325	Waiting Room	CPT-2		CPTB	P-1A	P-1A	P-1B	P-1B	AC-2		PL-2				EP-1	
326	Corridor	CPT-2		CPTB	P-1A	P-1A	P-1A	P-1A	AC-2						EP-1	
327	Reception	CPT-2		CPTB	P-1A	P-1A	P-1B	P-1A	AC-2		PL-2				EP-1	
328	Interview	CPT-2		CPTB	AWC-1	AWC-1	AWC-1	AWC-1	AC-4						EP-1	
329	Office	CPT-2		CPTB	P-1A	P-1A	P-1B	P-1A	AC-2						EP-1	
330	Office	CPT-5		CPTB	P-1A	P-1B	P-1B	P-1A	AC-2						EP-1	
331	Stair				EP-2A	EP-2B	EP-2A	EP-2A	AC-2						EP-1	

Number	Name	Floors		Base	Walls				Ceiling	Height	Laminates			Hollow Metal		Notes Key
		Field	Accent		E Wall	S Wall	W Wall	N Wall			Counter	Cabinet	Sills	Doors	Frames	
					Wainscot or Accent											
					E Wall	S Wall	W Wall	N Wall								
332	Staff Room	CPT-2		CPTB	P-1A	P-1B	P-1A	P-1A	AC-2						EP-1	
333	Stair		VCT-1A	RB-1A	EP-2A	EP-2A	EP-2A	EP-2A	AC-2						EP-1	new finishes at landings
334	Files	CPT-2		CPTB	P-1A	P-1A	P-1A	P-1A	AC-2						EP-1	closet next to files ?
335	Data Closet	VCT-1A		RB-1A	EP-2A	EP-2A	EP-2A	EP-2A	AC-1						EP-1	Install non combustible plywood at walls
336	Closet	CPT-2		CPTB	P-1A	P-1A	P-1A	P-1A	AC-2						EP-1	
337	Linen															
338	Janitor	VCT-1A		RB-1A	EP-2A	EP-2A	EP-2A	EP-2A	AC-3						EP-1	

DIVISION 22 00 00
PLUMBING
TABLE OF CONTENTS

Section	Title
22 00 50	General Plumbing Systems Requirements
22 05 53	Identification for Plumbing Piping and Equipment
22 07 00	Plumbing Insulation
22 11 00	Facility Water Distribution
22 13 00	Facility Sanitary Waste and Vent Systems
22 40 00	Plumbing Fixtures

END OF SECTION

SECTION 22 00 50
GENERAL PLUMBING REQUIREMENTS

CONTENTS

PART 1 GENERAL

1.01 Applicable Standards.

1.02 Coordination.

1.03 Definitions.

1.04 Project Record Documents.

1.05 Project / Site Conditions.

1.06 Quality Control.

1.07 Regulatory Requirements.

1.08 Related Documents.

1.09 Responsibility.

1.10 Scope of Work

1.11 Storage and Protection.

1.12 Submittals.

1.13 Utility Connections.

PART 2 MATERIALS

2.01 Access Panels.

2.02 Motors and Starters.

2.03 Substitutions.

PART 3 EXECUTION

3.01 Cutting and Patching.

3.02 Electrical Requirements.

3.03 Engineer's Final Punch.

3.04 Final Adjusting.

3.05 Final Cleaning.

3.06 Progress Cleaning.

3.07 Removal of Temporary Utilities, Facilities, and Controls.

3.08 Rigging and Hoisting.

3.09 Starting of Systems.

3.10 Transportation and Handling.

PART 1 GENERAL

1.01 APPLICABLE STANDARDS

A. Refer to specific specification sections for reference standard that are applied in this specification.

B. Where referenced standards and code requirements both apply, the more stringent requirement shall be met.

1.02 COORDINATION

A. Coordinate work with all other Trades before installation to eliminate conflicts over available space. This coordination will be led by the HVAC contractor as described in Section 23 00 50, and shall result in ¼" scale drawings of each work area. The plumbing systems shall not be laid out without benefit of coordination with the other trades of the project.

B. Arrange with other Trades for the provision of all chases, slots, and openings necessary for the proper installation of the Plumbing Work.

C. Coordinate the installation of all required supporting devices.

D. Set sleeves in poured concrete construction and other structural components as they are constructed.

E. Where electrical connections are required, confirm available electrical characteristics with the project Electrical Contractor before item is ordered.

F. Where connections to Site Services are required, confirm location and elevation of same in the field before proceeding with the layout of the building systems.

1.03 DEFINITIONS

A. "Code", "Regulation", "Ordinance", "Law", and "Rule" are used interchangeably in this Specification to mean requirements of all authorities (local, State, Federal, or other) which may have jurisdiction over the construction of the work. Where one is used, all are implied.

B. "Concealed Exterior Installations" refers to exterior Plumbing work that is protected from weather conditions and contact by building components, but is exposed to outdoor ambient temperatures.

C. "Concealed Interior Installations" refers to interior Plumbing work that is concealed from physical contact by building components when the project is complete.

D. "Exposed Exterior Installations" refers to exterior Plumbing work that is exposed to exterior ambient conditions and not protected from contact by permanent building components.

E. “Exposed Interior Installations” refers to interior Plumbing work that is exposed to view in the final construction.

F. “Finished Spaces” are spaces that are generally accessible to the building staff and general public.

1.04 PROJECT RECORD DOCUMENTS

A. Provide in accordance with the requirements of Division 1 and other portions of this Division.

B. Maintain a “clean” set of project drawings for the sole purpose of recording deviations from the design. This set of drawings shall be maintained at the project site, with all modifications carefully marked-up as the work progresses.

C. This set of drawings shall show all work as actually installed with accurate vertical and horizontal measurements of concealed and buried work.

D. This set of Project Record Documents shall be certified as accurate by the Contractor and turned over to the Owner for future reference.

E. Additionally, the Contractor shall provide the Record Drawings in AutoCAD format to the Owner for his use. The AutoCad data shall be updated to reflect all of the actual conditions of installation for the entire project. The project design drawings will be made available to the Contractor by the design Engineer in AutoCAD 2007.

1.05 PROJECT / SITE CONDITIONS

A. Visit the project site before bidding to determine the actual existing conditions imposed on the construction of the work. The Contractor retains sole responsibility for interpreting the impact of existing conditions on his work.

1.06 QUALITY CONTROL

A. All work shall be performed by Contractors skilled in the work required with a minimum of three (3) years experience.

B. All materials shall be supplied by manufacturers having a minimum of three (3) years experience in the production of the item provided.

1.07 REGULATORY REQUIREMENTS

A. All work on this project shall be performed in accordance with all applicable codes, standards, and references.

B. Applicable Codes: All references to codes, specifications, and standards in the specifications sections and on the drawings shall mean and are intended to be the edition, amendment, or revision of such standard in effect at the date of these contract documents.

C. Obtain and pay for all required permits and inspections. Obtain certificates of such inspections, and provide copies of same to the Design Professional.

1.08 RELATED DOCUMENTS

A. The general conditions of the Contract, including Conditions of the Contract and Division 1 of the Specification.

B. Construction Drawings, all Addenda, Bulletins and Change Orders.

1.09 RESPONSIBILITY

A. Submission of a bid is considered evidence that the Contractor has visited the site, examined the Drawings and Specifications of all Trades, and has fully informed himself as to all Project conditions.

B. Submission of a bid implies the Contractor is proficient, experienced and knowledgeable of all regulations and conditions which may affect any portion of the Work included in his bid.

C. The Contractor is responsible to comply with the requirements of all of the construction documents provided for this project.

D. Where clarification is required with regard to which trade is responsible for a particular item of work, such clarification is to be requested of the design professional, in writing, in a timely manner.

1.10 SCOPE OF WORK

A. These specifications and the accompanying drawings describe the furnishing and installation of all material, equipment, supplies, labor and supervision required for the complete performance of all operations relating to the Plumbing Trades Work.

B. The work provided shall be complete in all respects and shall result in satisfactorily operating systems that have been approved for occupancy by the authority(ies) having jurisdiction.

C. This project consists generally of an addition to, and renovation of, an existing county jail facility. The jail shall remain in operation during the entire course of construction. Special security procedures will be implemented at the discretion of Sheriff staff which may cause the Contractor loss of work efficiency. No claim for extra compensation will be allowed for this condition.

D. Specific types of work to be accomplished under the Plumbing trades work include, but are not limited to:
   1. Hangers and Supports for Plumbing Piping and Equipment.
   2. Identification for Plumbing Piping and Equipment.
   3. Plumbing Insulation.
   4. Facility Water Distribution.
   5. Facility Sanitary, Waste, Vent, and Storm Water Drainage Systems.
   6. Domestic Water Softeners.
   7. Fuel-Fired Domestic Water Heaters.
   8. Plumbing Fixtures.
   9. Security Plumbing Fixtures.

1.11 STORAGE AND PROTECTION

A. Refer to Division 1.

B. Store all materials and equipment to protect against damage of all types.

C. Provide appropriate barriers to maintain safe construction areas.

1.12 SUBMITTALS

A. Submittals for review, except color samples, shall be made to the engineer in pdf electronic format. The engineer will add his review stamp to the electronic format and return it to the contractor for his records.

B. Submittals for review shall be made prior to the purchase of materials. Submittal procedures shall be in accordance with Division 1 of these specifications, and the following:
   1. Submit copes for distribution with product data grouped to include complete submittals of related system, products, and accessories in a single submittal. Each submittal shall be clearly marked to indicate equipment number, specification section, etc., which the submittal describes.
   2. Mark dimensions and values in units to match those specified.
   3. Data must include job name, dimensions, capacities, construction characteristics, and installation instruction. Where applicable, submittal data must also include metal gauges, frame types, finish fan diameters, bearing types, lubrication system, motor types, insulation, velocities, pressure drops, pump curves, coil areas, filter types and areas, electrical characteristics, wiring and piping diagrams, and accessories required.
   4. Submittals must be thoroughly checked by the Contractor and must contain his stamp of approval before being sent to the Design Professional for review.
   5. Submittals not conforming to the above requirements will be returned without review.

C. The Design Professional will review shop drawings for general conformance to the construction documents. This review is provided as a convenience to the Contractor by the Design Professional. The Design Professional will review submitted information with reasonable care, however, no responsibility accrues to the Design Professional for errors of omission in the review of submitted materials. The Contractor retains complete, sole responsibility for providing materials and equipment that are in conformance to the construction documents.

D. Final “As-Built” drawings shall be submitted by the contractor in AutoCAD format. The design professional will, upon request, provide the AutoCAD design drawings for the Contractor’s use. The Contractor shall modify the design drawings as necessary to accurately reflect the actual installation for this project.

1.13 UTILITY CONNECTIONS

A. Contact utility companies and arrange and pay for (as a part of the base bid) all new service connections that are required.

PART 2 MATERIALS

2.01 ACCESS PANELS

A. Provide access panels for all equipment which must be located in “inaccessible” locations (above fixed ceilings, behind walls, etc.). Access panels shall conform to the requirements of the General Trades Specifications. Turn panels over to the General Trades Contractor for installation. Provide fire rated access panel where such penetrations are through fire rated assemblies.

2.02 MOTORS AND STARTERS

A. Motors for the Plumbing equipment shall be furnished by this Contractor unless specifically noted to the contrary elsewhere.

B. The work shall be complete in every respect. Where starters, disconnects, etc., are not specifically indicated on the Electrical Trades Drawings and Specifications, they are to be provided by this Contractor.

C. All electrical equipment and installation provided by this Contractor shall conform to the requirements of Electrical Divisions of the specification.

D. Each motor shall have a conduit terminal box.

E. All motors shall have a power factor of 85%, or higher.

2.03 SUBSTITUTIONS

A. In the Drawings and Specifications materials and equipment are generally noted as “based on”. The layout and arrangement of systems and equipment for this project are based on the size and arrangement of these manufacturers.

B. For major items of equipment, other manufacturers may be listed who manufacture equipment deemed to be “equal” by the Engineer. These items may be used at the Contractor’s option. It remains the Contractor’s responsibility to determine which item manufactured by the “alternate” company is equivalent to the item listed as “based on”, and to obtain the approval of the Engineer for all such “substitutions”.

C. In all cases where items other than those upon which the design is based are used, it is the Contractor’s responsibility to determine the impact of providing “alternate” equipment. Where “alternate” equipment is provided, the Contractor shall pay all charges, including design fees and charges by other Contractor’s that may be necessary to accommodate the installation of the “alternate” equipment or materials.

PART 3 EXECUTION

3.01 CUTTING AND PATCHING

A. Perform in accordance with the requirements of Division 1.

B. Perform, or cause to be performed, all cutting and patching necessary for the installation of the work, unless specifically noted to the contrary elsewhere.

C. No structural members shall be cut without written authorization from the Design Professional. All such cutting, when authorized, shall be done in strict accordance with the instructions of the Design Professional.

D. In general, roof and wall openings required for Plumbing equipment and systems shall be provided by this Contractor. The size and location of these openings shall be the responsibility of this Contractor.

3.02 ELECTRICAL REQUIREMENTS

A. The electrical characteristics available for each item of Plumbing equipment shall be confirmed with the project electrical contractor before the Plumbing Contractor orders the equipment.

3.03 ENGINEER'S FINAL PUNCH

A. A final punch of the project will only be performed after the following documents are received for review:
   1. Copies of acceptance certificates from local inspecting offices.
   2. Copy of the General Contractor's punch list with written verification that all items have been completed.
   3. Copy of the project Record Drawings.

3.04 FINAL ADJUSTING

A. Adjust operating products and equipment to ensure smooth and unhindered operation.

3.05 FINAL CLEANING

A. Execute final cleaning prior to final inspection.

B. Clean interior and exterior surfaces exposed to view. Vacuum carpeted and soft surfaces where materials have been deposited due to the work of this Contactor.

C. Clean debris from site.

D. Remove waste and surplus materials, rubbish, and construction facilities from the site.

E. Fixtures and equipment: All fixtures and equipment shall be cleaned. Clean floor drains.

F. All plates, polished, and bronzed surfaces shall be cleaned and polished.

3.06 PROGRESS CLEANING

A. Maintain work areas free of waste materials, debris, and rubbish. Maintain site in a clean and orderly condition at all times.

B. All openings in piping systems shall be protected during construction to prevent the entrance of foreign materials.

3.07 REMOVAL OF TEMPORARY UTILITIES, FACILITIES, AND CONTROLS

A. Remove temporary equipment, facilities, and materials prior to Substantial Completion.

B. Clean and repair damage caused by installation or use of temporary work.

3.08 RIGGING AND HOISTING

A. Provide all rigging and hoisting necessary for the installation of the materials and equipment provided under this Division of work.

3.09 TESTING OF SYSTEMS

A. All systems fabricated on site shall be tested by the Contractor. Testing shall include the provision of all necessary equipment, labor, and fluids.

B. Notify the Design Professional and other inspection authorities at least 48 hours before the scheduled test, or sampling time.

C. Control devices, instrumentation, and similar items not designed to withstand the test pressures shall be removed, or otherwise protected prior to testing the systems.

D. Valves, faucets, automatic valves, etc., shall be properly adjusted and shall be quiet operating.

3.10 TRANSPORTATION AND HANDLING

A. Transport and handle all materials and equipment in accordance with the manufacturer's directions.

END OF SECTION

SECTION 22 05 53
IDENTIFICATION FOR PLUMBING PIPING AND EQUIPMENT

PART 1 GENERAL

1.01 SUMMARY

A. Section Includes:
1. Nameplates.
2. Tags.
3. Stencils.
4. Pipe markers.
5. Ceiling tacks.
6. Labels.

1.02 SUBMITTALS

A. Submit in accordance with the requirements of Division 1, Section 22 00 50, and this section.

B. Product Data: Submit manufacturers catalog literature for each product required.

C. Shop Drawings: Submit list of wording, symbols, letter size, and color coding for mechanical identification and valve chart and schedule, including valve tag number, location, function, and valve manufacturer's name and model number.

D. Manufacturer's Installation Instructions: Indicate installation instructions, special procedures, and installation.

E. Project Record Documents: Record actual locations of tagged valves; include valve tag numbers.

1.03 QUALITY ASSURANCE

A. Conform to ASME A13.1 for color scheme for identification of piping systems and accessories.

1.04 FIELD MEASUREMENTS

A. Verify field measurements prior to fabrication.

PART 2 PRODUCTS

2.01 NAMEPLATES

A. Product Description: Laminated three-layer plastic with engraved black letters on light contrasting background color.

2.02 TAGS

A. Plastic Tags:
1. Laminated three-layer plastic with engraved black letters on light contrasting background color. Tag size minimum 1-1/2 inches diameter.

B. Information Tags:
1. Clear plastic with printed "Danger," "Caution," or "Warning" and message; size 3-1/4 x 5-5/8 inches with grommet and self-locking nylon ties.

C. Tag Chart: Typewritten letter size list of applied tags and location in anodized aluminum frame.

2.03 STENCILS

A. Stencils: With clean cut symbols and letters of following size:
1. Equipment: 1-3/4 inches high letters.

B. Stencil Paint: Semi-gloss enamel; colors and lettering size conforming to ASME A13.1.

2.04 PIPE MARKERS

A. Color and Lettering: Conform to ASME A13.1.

B. Plastic Pipe Markers:
1. Factory fabricated, flexible, semi-rigid plastic, preformed to fit around pipe or pipe covering. Larger sizes may have maximum sheet size with spring fastener.

C. Plastic Underground Pipe Markers:
1. Bright colored continuously printed plastic ribbon tape, minimum 6 inches wide by 4 mil thick, manufactured for direct burial service.

2.05 CEILING TACKS

A. Description: Steel with 3/4 inch diameter color-coded head.

B. Color code as follows:
1. Plumbing valves: Green.

2.06 LABELS

A. Description: Laminated Mylar, size 1.9 x 0.75 inches, adhesive backed with printed identification.

PART 3 EXECUTION

3.01 PREPARATION

A. Degrease and clean surfaces to receive adhesive for identification materials.

3.02 INSTALLATION

A. Install identifying devices after completion of coverings and painting.

B. Install plastic nameplates with corrosive-resistant mechanical fasteners, or adhesive.

C. Install labels with sufficient adhesive for permanent adhesion and seal with clear lacquer. For unfinished canvas covering, apply paint primer before applying labels.

D. Install tags using corrosion resistant chain. Number tags in sequence as approved by the Owner.

E. Install underground plastic pipe markers 6 to 8 inches below finished grade, directly above buried pipe.

F. Identify water heaters, pumps, tanks, and water treatment devices with stencil painting. Identify in-line pumps and other small devices with tags.

G. Identify control panels and major control components outside panels with plastic nameplates.

H. Identify valves in main and branch piping with tags.

I. Identify piping, concealed or exposed, with plastic pipe markers. Use tags on piping 3/4 inch diameter and smaller. Identify service, flow direction, and pressure. Install in clear view and align with axis of piping. Locate identification not to exceed 10 feet on straight runs including risers and drops, adjacent to each valve and tee, at each side of penetration of structure or enclosure, and at each obstruction.

J. Provide ceiling tacks to locate valves above T-bar type panel ceilings. Locate in corner of panel closest to equipment.

END OF SECTION

SECTION 22 07 00
PLUMBING INSULATION

PART 1 GENERAL

1.01 SUMMARY

A. Section Includes:
1. Plumbing piping insulation, jackets and accessories.
2. Plumbing equipment insulation, jackets and accessories.

1.02 SUBMITTALS

A. Submit in accordance with the requirements of Division 1, Section 22 00 50, and this section.

B. Product Data: Submit product description, thermal characteristics and list of materials and thickness for each service, and location.

C. Manufacturer's Installation Instructions: Submit manufacturers published literature indicating proper installation procedures.

1.03 QUALITY ASSURANCE

A. Test pipe insulation for maximum flame spread index of 25 and maximum smoke developed index of not exceeding 50 in accordance with ASTM E84.

B. Pipe insulation manufactured in accordance with ASTM C585 for inner and outer diameters.

C. Factory fabricated fitting covers manufactured in accordance with ASTM C450.

1.04 DELIVERY, STORAGE, AND HANDLING

A. Deliver, store, and handle in accordance with the requirements of Division 1, Section 22 00 50, and this Section.

B. Accept materials on site in original factory packaging, labeled with manufacturer's identification, including product density and thickness.

C. Protect insulation from weather and construction traffic, dirt, water, chemical, and damage, by storing in original wrapping.

1.05 ENVIRONMENTAL REQUIREMENTS

A. Install insulation only when ambient temperature and humidity conditions are within range recommended by manufacturer.

B. Maintain recommended temperature for the time period recommended by the manufacturer.

1.06 FIELD MEASUREMENTS

A. Verify field measurements prior to fabrication.

PART 2 PRODUCTS

2.01 PIPE INSULATION

A. TYPE P-1: ASTM C547, molded glass fiber pipe insulation.
1. Thermal Conductivity: 0.23 at 75 degrees F.
2. Operating Temperature Range: 0 to 850 degrees F.
3. Vapor Barrier Jacket: ASTM C1136, Type I, factory applied reinforced foil kraft with self-sealing adhesive joints.
4. Jacket Temperature Limit: minus 20 to 150 degrees F.

B. TYPE P-2: ASTM C547, molded glass fiber pipe insulation.
1. Thermal Conductivity: 0.23 at 75 degrees F.
2. Operating Temperature Range: 0 to 850 degrees F.

C. TYPE P-7: ASTM C534, Type I, flexible, non-halogen, closed cell elastomeric insulation, tubular.
1. Thermal Conductivity: 0.27 at 75 degrees F.
2. Maximum Service Temperature: 250 degrees F.
3. Operating Temperature Range: Range: Minus 58 to 250 degrees F.

D. TYPE P-11: ASTM C533; Type I, hydrous calcium silicate pipe insulation, rigid molded white; asbestos free.
1. Thermal Conductivity: 0.45 at 200 degrees F.
2. Operating Temperature Range: 140 to 1200 degrees F.

2.02 PIPE INSULATION JACKETS – NOT USED

2.03 PIPE INSULATION ACCESSORIES

A. Vapor Retarder Lap Adhesive: Compatible with insulation.

B. Covering Adhesive Mastic: Compatible with insulation.

C. Piping 1-1/2 inches diameter and smaller: Galvanized steel insulation protection shield. MSS SP-69, Type 40. Length: Based on pipe size and insulation thickness.

D. Piping 2 inches diameter and larger: Wood insulation saddle, hard maple. Inserts length: not less than 6 inches long, matching thickness and contour of adjoining insulation.

E. Closed Cell Elastomeric Insulation Pipe Hanger: Polyurethane insert with aluminum single piece construction with self adhesive closure. Thickness to match pipe insulation.

F. Tie Wire: 0.048 inch stainless steel with twisted ends on maximum 12 inch centers.

G. Mineral Fiber Hydraulic-Setting Thermal Insulating and Finishing Cement: ASTM C449/C449M.

H. Insulating Cement: ASTM C195; hydraulic setting on mineral wool.

I. Adhesives: Compatible with insulation.

2.04 EQUIPMENT INSULATION – NOT USED

2.05 EQUIPMENT INSULATION JACKETS – NOT USED

2.06 EQUIPMENT INSULATION ACCESSORIES – NOT USED

PART 3 EXECUTION

3.01 EXAMINATION

A. Verify piping has been tested before applying insulation materials.

B. Verify surfaces are clean and dry, with foreign material removed.

3.02 INSTALLATION - PIPING SYSTEMS

A. Piping Exposed to View in Finished Spaces: Locate insulation and cover seams in least visible locations.

B. Continue insulation through penetrations of building assemblies or portions of assemblies having fire resistance rating of one hour or less. Provide intumescent fire-stopping when continuing insulation through fire rated assembly. Finish at supports, protrusions, and interruptions.

C. Piping Systems Conveying Fluids Below Ambient Temperature:
1. Insulate entire system including fittings, valves, unions, flanges, strainers, flexible connections, pump bodies, and expansion joints.
2. Furnish factory-applied or field-applied vapor retarder jackets. Secure factory-applied jackets with pressure sensitive adhesive self-sealing longitudinal laps and butt strips. Secure field-applied jackets with outward clinch expanding staples and seal staple penetrations with vapor retarder mastic.
3. Insulate fittings, joints, and valves with molded insulation of like material and thickness as adjacent pipe. Finish with glass cloth and vapor retarder adhesive or PVC fitting covers.

D. Hot Piping Systems degrees F:

1. Furnish factory-applied or field-applied standard jackets. Secure with outward clinch expanding staples or pressure sensitive adhesive system on standard factory-applied jacket and butt strips or both.
2. Insulate fittings, joints, and valves with insulation of like material and thickness as adjoining pipe. Finish with glass cloth and adhesive or PVC fitting covers.
3. Insulate flanges and unions at equipment.

E. Inserts and Shields:
1. Piping Conveying Fluids Below Ambient Temperature: Install galvanized steel shield between pipe hanger and insulation.

F. Closed Cell Elastomeric Insulation:
1. Push insulation on to piping.
2. Miter joints at elbows.
3. Seal seams and butt joints with manufacturer's recommended adhesive.
4. When application requires multiple layers, apply with joints staggered.
5. Insulate fittings and valves with insulation of like material and thickness as adjacent pipe.

G. Heat Traced Piping: Insulate fittings, joints, and valves with insulation of like material, thickness, and finish as adjoining pipe. Size large enough to enclose pipe and heat tracer.

3.03 INSTALLATION – EQUIPMENT – NOT USED

3.04 SCHEDULES

A. Water Supply Services Piping Insulation Schedule:

PIPING SYSTEM	INSULATION TYPE	PIPE SIZE (inches)	INSULATION THICKNESS (inches)
Domestic Water	P-1	1-1/4 and smaller 1-1/2 and larger	½ 1

B. Drainage Services Piping Insulation Schedule:

PIPING SYSTEM	INSULATION TYPE	PIPE SIZE (inches)	INSULATION THICKNESS inches
Storm Piping (horizontal above ground within building)	P-1 or P-5	All sizes	½

END OF SECTION

SECTION 22 11 00
FACILITY WATER DISTRIBUTION

PART 1 GENERAL

1.01 SUMMARY

A. Section Includes:
1. Domestic water piping, within 5 feet of building.
2. Domestic water piping, above grade.
3. Flue and Combustion Air Piping.
4. Unions and flanges.
5. Valves.
6. Pipe hangers and supports.
7. Pressure gages.
8. Pressure gage taps.
9. Thermometers.
10. Relief valves.
11. Hose bibs.
12. Backflow preventers.
13. Water hammer arrestors.
14. Thermostatic mixing valves.
15. Water softeners.
16. In-line circulator pumps.

1.02 SUBMITTALS

A. Submit in accordance with the requirements of Division 1, Section 22 00 50, and this section.

B. Product Data:
1. Piping: Submit data on pipe materials, fittings, and accessories. Submit manufacturer's catalog information.
2. Valves: Submit manufacturers catalog information with valve data and ratings for each service.
3. Hangers and Supports: Submit manufacturers catalog information including load capacity.
4. Domestic Water Specialties: Submit manufacturers catalog information, component sizes, rough-in requirements, service sizes, and finishes.
5. Pumps: Submit pump type, capacity, certified pump curves showing pump performance characteristics with pump and system operating point plotted. Include NPSH curve when applicable. Include electrical characteristics and connection requirements.

C. Manufacturer's Installation Instructions: Submit installation instructions for pumps, valves and accessories.

D. Project Record Documents: Record actual locations of piping, valves, and equipment.

E. Operation and Maintenance Data: Submit spare parts list, exploded assembly views and recommended maintenance intervals.

1.03 QUALITY ASSURANCE

A. For drinking water service, provide valves complying with NSF 61.

1.04 DELIVERY, STORAGE, AND HANDLING

A. Deliver, store, and handle in accordance with the requirements of Division 1, Section 22 00 50, and this Section.

B. Accept valves and equipment on site in shipping containers with labeling in place. Inspect for damage.

C. Provide temporary protective coating on cast iron and steel valves.

D. Provide temporary end caps and closures on piping and fittings. Maintain in place until installation.

E. Protect piping systems from entry of foreign materials by temporary covers, completing sections of the Work, and isolating parts of completed system.

1.05 FIELD MEASUREMENTS

A. Verify field measurements prior to fabrication.

PART 2 PRODUCTS

2.01 DOMESTIC WATER PIPING, BURIED WITHIN 5 FEET OF BUILDING

A. Ductile Iron Pipe: AWWA C151.
1. Fittings: AWWA C110, ductile iron, standard thickness.
2. Joints: AWWA C111, rubber gasket with rods.
3. Jackets: AWWA C105 polyethylene jacket.

B. Copper Tubing: ASTM B88, Type K, annealed.
1. Fittings: ASME B16.18, cast copper, or ASME B16.22, wrought copper.
2. Joints: Compression connection or Brazed, AWS A5.8 BCuP silver/phosphorus/copper alloy with melting range 1190 to 1480 degrees F.

2.02 DOMESTIC WATER PIPING, ABOVE GRADE

A. Copper Tubing: ASTM B88, Type L, hard drawn.
1. Fittings: ASME B16.18, cast copper alloy or ASME B16.22, wrought copper and bronze.
2. Joints: ASTM B32, Alloy Grade Sb5 tin-antimony, or Alloy Grade Sn95 tin-silver, lead free solder.

2.03 FLUE AND COMBUSTION AIR PIPING

A. PVC Pipe: ASTM D1785, Schedule 40, polyvinyl chloride (PVC) material.
   1. Fittings: ASTM D2466, Schedule 40, PVC.
   2. Joints: ASTM D2855, solvent weld with ASTM D2564 solvent cement. Prime joints with a contrasting color.

2.04 UNIONS AND FLANGES

A. Unions for Pipe 2 inches and Smaller:
   1. Ferrous Piping: Class 150, malleable iron, threaded.
   2. Copper Piping: Class 150, bronze unions with soldered.
   3. Dielectric Connections: Union with galvanized or plated steel threaded end, copper solder end, water impervious isolation barrier.
   4. PVC Piping: PVC.

B. Flanges for Pipe 2-1/2 inches and Larger:
   1. Ferrous Piping: Class 150, forged steel, slip-on flanges.
   2. Copper Piping: Class 150, slip-on bronze flanges.
   3. PVC Piping: PVC flanges.
   4. Gaskets: 1/16 inch thick preformed neoprene gaskets.

C. PVC Pipe Materials: For connections to equipment and valves with threaded connections, furnish solvent-weld socket to screwed joint adapters and unions, or ASTM D2464, Schedule 80, threaded, PVC pipe.

2.05 VALVES

A. GATE VALVES
   1. 2 inches and Smaller: MSS SP 80, Class 125, bronze body, bronze trim, threaded bonnet, non-rising stem, hand-wheel, inside screw with back-seating stem, solid wedge disc, alloy seat rings, solder ends.
   2. 2-1/2 inches and Larger: MSS SP 70, Class 125, cast iron body, bronze trim, bolted bonnet, rising stem, hand-wheel, outside screw and yoke, solid wedge disc with bronze seat rings, flanged ends. Furnish chain-wheel operators for valves 6 inches and larger mounted over 8 feet above floor.

B. GLOBE VALVES
   1. 2 inches and Smaller: MSS SP 80, Class 125, bronze body, bronze trim, threaded bonnet, hand wheel, Buna-N composition disc, solder ends.
   2. 2-1/2 inches and Larger: MSS SP 85, Class 125, cast iron body, bronze trim, hand wheel, outside screw and yoke, flanged ends. Furnish chain-wheel operators for valves 6 inches and larger mounted over 8 feet above floor.

C. BALL VALVES

D. 2-1/2 inches and Smaller: MSS SP 110, 400 psi WOG, two piece bronze body, chrome plated brass ball, full port, Teflon seats, blow-out proof stem, solder ends with union, lever handle.

E. CHECK VALVES
1. Horizontal Swing Check Valves:
a. 2 inches and Smaller: MSS SP 80, Class 150, bronze body and cap, bronze seat, Buna-N disc, solder ends.
b. 2-1/2 inches and Larger: MSS SP 71, Class 125, cast iron body, bolted cap, bronze or cast iron disc, renewable disc seal and seat, flanged ends.

2.06 PIPE HANGERS AND SUPPORTS

A. Plumbing Piping: Conform to ASME B31.9.

B. Hangers for Pipe Sizes 1/2 to 1-1/2 inch: Malleable iron, adjustable swivel, split ring.

C. Hangers for Cold Pipe Sizes 2 inches and Larger: Carbon steel, adjustable, clevis.

D. Hangers for Hot Pipe, Sizes 2 to 4 inches: Carbon steel, adjustable, clevis.

E. Multiple or Trapeze Hangers: Steel channels with welded supports or spacers and hanger rods.

F. Vertical Support: Steel riser clamp.

G. Floor Support: Cast iron adjustable pipe saddle, lock nut, nipple, floor flange, and concrete pier or steel support.

H. Copper Pipe Support: Carbon steel ring, adjustable, copper plate.

2.07 PRESSURE GAGES

A. Gage: ASME B40.1, UL 393 with bourdon tube, rotary brass movement, brass socket, front calibration adjustment, black scale on white background.
1. Case: Steel.
2. Bourdon Tube: Brass.
3. Dial Size: 3-1/2 inch diameter.
4. Mid-Scale Accuracy: One percent.
5. Scale: Both psi and kPa.

2.08 PRESSURE GAGE TAPS

A. Needle Valve: Brass, 1/4 inch NPT for minimum 300 psi.

B. Ball Valve: Brass, 1/8 inch NPT for 250 psi.

C. Pulsation Damper: Pressure snubber, brass with 1/4 inch NPT connections.

2.09 STEM TYPE THERMOMETERS

A. Thermometer: ASTM E1, adjustable angle, red appearing mercury, lens front tube, cast aluminum case with enamel finish, cast aluminum adjustable joint with positive locking device.
   1. Size: 9 inch scale.
   2. Window: Clear glass.
   3. Stem: Brass, 3/4 inch NPT, 3-1/2 inch long.
   4. Accuracy: ASTM E77, 2 percent.
   5. Calibration: Both degrees F and degrees C.

2.10 RELIEF VALVES

A. Pressure Relief:
   1. ANSI Z21.22 certified, bronze body, Teflon seat, steel stem and springs, automatic, direct pressure actuated.

B. Temperature and Pressure Relief:
   1. ANSI Z21.22 certified, bronze body, Teflon seat, stainless steel stem and springs, automatic, direct pressure actuated; temperature relief maximum 210 degrees F, capacity ASME certified and labeled.

2.11 STRAINERS

A. 2 inch and Smaller: Threaded brass body for 175 psi CWP, Y pattern with 1/32 inch stainless steel perforated screen.

B. 1-1/2 inch to 4 inch: Class 125, flanged iron body, Y pattern with 1/16-inch stainless steel perforated screen.

2.12 HOSE BIBS

A. Interior: Bronze or brass with integral mounting flange, replaceable hexagonal disc, hose thread spout, chrome plated where exposed with lock shield and removable key, integral vacuum breaker in conformance with ASSE 1011.

B. Interior Mixing: Bronze or brass, wall mounted, double service faucet with hose thread spout, integral stops, chrome plated where exposed with hand wheels, and vacuum breaker in conformance with ASSE 1011.

C. Exterior Wall Hydrant (HB-1): ASSE 1019; non-freeze, self-draining type with chrome plated, lockable recessed box, hose thread spout, lock shield and removable key, and integral vacuum breaker.

2.13 BACKFLOW PREVENTERS

A. Reduced Pressure Backflow Preventers:
   1. Comply with ASSE 1013.
   2. Bronze body, with bronze internal parts and stainless steel springs.
   3. Two independently operating, spring loaded check valves; diaphragm type differential pressure relief valve located between check valves; third check valve opening under back pressure in case of diaphragm failure; non-threaded vent outlet; assembled with two gate valves, strainer, and four test cocks.

B. Double Check Valve Assemblies: Comply with ASSE ASSE 1015 or AWWA C510; Bronze body with corrosion resistant internal parts and stainless steel springs; two independently operating check valves with intermediate atmospheric vent.

2.14 WATER HAMMER ARRESTORS

A. ASSE 1010; stainless steel construction, bellows type sized in accordance with PDI WH-201.

B. Pre-charged suitable for operation in temperature range -100 to 300 degrees F and maximum 250 psi working pressure.

2.15 THERMOSTATIC MIXING VALVES

A. Valve: Chrome plated cast brass body, stainless steel or copper alloy bellows, integral temperature adjustment. Conform to ASSE 1070 to temper water to maximum 110 degrees F.

B. Capacity: Determined by supplier based on the layout provided on the plans.

C. Accessories:
   1. Check valve on inlets.
   2. Volume control shut-off valve on outlet.
   3. Stem thermometer on outlet.
   4. Strainer stop checks on inlets.

D. Cabinet: 16 gage stainless steel, for surface mounting with keyed lock.

2.16 WATER SOFTENERS

A. Performance:
   1. Softening Capacity: 350,000 grains between regenerations.
   2. Service Flow: 15 gpm average, 170 gpm peak.
   3. Electrical Characteristics:
      a. 120 volts, single phase, 60 Hz, 20 minimum circuit ampacity.

B. Softener Tank: Glass fiber reinforced plastic tank.

C. Brine Tank: Glass fiber reinforced plastic tank lb.

D. Control: Brass control valve cycled to regenerate from one to twelve day period.

2.17 IN-LINE CIRCULATOR PUMPS

A. Casing: Bronze rated for 125 psig working pressure.

B. Impeller: Bronze.

C. Shaft: Alloy steel with integral thrust collar and two, oil lubricated bronze sleeve bearings.

D. Seal: Carbon rotating against stationary ceramic seat.

E. Drive: Flexible coupling.

F. Performance: See plans.

G. Electrical Characteristics and Components: See Plans.

PART 3 EXECUTION

3.01 EXAMINATION

A. Verify excavations are to required grade, dry, and not over-excavated.

3.02 PREPARATION

A. Ream pipe and tube ends. Remove burrs. Bevel plain end ferrous pipe.

B. Remove scale and dirt, on inside and outside, before assembly.

3.03 INSTALLATION – METERS

A. Install meters in accordance with the requirements of the local utility.

3.04 INSTALLATION - THERMOMETERS AND GAGES

A. Install one pressure gage for each pump, locate taps before strainers and on suction and discharge of pump; pipe to gage.

B. Install gage taps in piping.

C. Install pressure gages with pulsation dampers. Provide needle valve to isolate each gage.

D. Install thermometers in piping systems in sockets in short couplings. Enlarge pipes smaller than 2-1/2 inches for installation of thermometer sockets. Allow clearance from insulation.

E. Provide instruments with scale ranges selected according to service with largest appropriate scale.

F. Install gages and thermometers in locations where they are easily read from normal operating level. Install vertical to 45 degrees off vertical.

G. Adjust gages and thermometers to final angle, clean windows and lenses, and calibrate.

3.05 INSTALLATION - HANGERS AND SUPPORTS

A. Inserts:
1. Provide inserts for placement in concrete forms.
2. Provide inserts for suspending hangers from reinforced concrete slabs and sides of reinforced concrete beams.
3. Provide hooked rod to concrete reinforcement section for inserts carrying pipe 4 inches and larger.
4. Where concrete slabs form finished ceiling, locate inserts flush with slab surface.
5. Where inserts are omitted, drill through concrete slab from below and provide through-bolt with recessed square steel plate and nut recessed into and grouted flush with slab.

B. Pipe Hangers and Supports:
1. Install in accordance with ASME B31.9.
2. Support horizontal piping as schedule.
3. Install hangers to provide minimum 1/2 inch space between finished covering and adjacent work.
4. Place hangers within 12 inches of each horizontal elbow.
5. Use hangers with 1-1/2 inch minimum vertical adjustment. Design hangers for pipe movement without disengagement of supported pipe.
6. Support vertical piping at every floor. Support riser piping independently of connected horizontal piping.
7. Where piping is installed in parallel and at same elevation, provide multiple pipe or trapeze hangers.
8. Provide copper plated hangers and supports for copper piping where piping is in direct contact with pipe.
9. Prime coat exposed steel hangers and supports. Hangers and supports located in crawl spaces, pipe shafts, and suspended ceiling spaces are not considered exposed.
10. Provide hangers adjacent to motor driven equipment with vibration isolation.

3.06 INSTALLATION - BURIED PIPING SYSTEMS

A. Verify connection size, location, and invert are as indicated on Drawings.

B. Establish elevations of buried piping with not less than five (5) ft of cover.

C. Establish minimum separation services in accordance with code.

D. Remove scale and dirt on inside of piping before assembly.

E. Excavate pipe trench in accordance with site Civil specifications.

F. Place bedding material at trench bottom to provide uniform bedding for piping, level bedding materials in one continuous layer not exceeding 4 inches compacted depth; compact to 95 percent maximum density.

G. Install pipe on prepared bedding.

H. Route pipe in straight line.

I. Install pipe to allow for expansion and contraction without stressing pipe or joints.

J. Install plastic ribbon tape continuous over top of pipe.

K. Pipe Cover and Backfilling:
   1. Backfill trench in accordance with site Civil specifications.
   2. Maintain optimum moisture content of fill material to attain required compaction density.
   3. After hydrostatic test, evenly backfill entire trench width by hand placing backfill material and hand tamping in 4 inches compacted layers to 12 inches minimum cover over top of jacket. Compact to 95 percent maximum density.
   4. Evenly and continuously backfill remaining trench depth in uniform layers with backfill material.
   5. Do not use wheeled or tracked vehicles for tamping.

3.07 INSTALLATION - ABOVE GROUND PIPING

A. Install non-conducting dielectric connections wherever jointing dissimilar metals.

B. Route piping in orderly manner and maintain gradient. Route parallel and perpendicular to walls.

C. Install piping to maintain headroom without interfering with use of space or taking more space than necessary.

D. Group piping whenever practical at common elevations.

E. Slope piping and arrange systems to drain at low points.

F. Install piping to allow for expansion and contraction without stressing pipe, joints, or connected equipment.

G. Provide clearance in hangers and from structure and other equipment for installation of insulation and access to valves and fittings.

H. Where items requiring maintenance have been installed behind inaccessible surfaces (walls, hard ceilings, etc.), provide appropriately sized access panels. Access panel shall be fire rated where they are installed in fire rated assemblies.

I. Where pipe support members are welded to structural building framing, scrape, brush clean, and apply one coat of zinc rich primer to welding.

J. Provide support for utility meters in accordance with requirements of utility companies.

K. Prepare exposed, unfinished pipe, fittings, supports, and accessories ready for finish painting.

L. Install domestic water piping in accordance with ASME B31.9.

M. Sleeve pipes passing through partitions, walls and floors.

N. Install fire-stopping at penetrations through fire rated construction.

O. Install unions downstream of valves and at equipment or apparatus connections.

P. Install valves with stems in, or above, an horizontal plane passing through the center of the valve.

Q. Install brass male adapters each side of valves in copper piped system. Solder adapters to pipe.

R. Install ball valves for shut-off and to isolate equipment, part of systems, or vertical risers.

S. Install ball valves for throttling, bypass, or manual flow control services.

T. Install potable water protection devices on plumbing lines where contamination of domestic water may occur. include on boiler feed water lines, janitor rooms, fire sprinkler systems, premise isolation, irrigation systems, flush valves, interior, and exterior hose bibs, and all other similar locations.

U. Pipe relief from valves, back-flow preventers and drains to nearest floor drain.

V. Test backflow preventers in accordance with ASSE 5013.

W. Install water hammer arrestors complete with accessible isolation valve on hot and cold water supply piping wherever quick closing valves might cause water hammer.

3.08 INSTALLATION - PUMPS

A. Provide pumps to operate at specified system fluid temperatures without vapor binding and cavitation, are non-overloading in parallel or individual operation, and operate within 25 percent of midpoint of published maximum efficiency curve.

B. Provide air cock and drain connection on horizontal pump casings.

C. Lubricate pumps before start-up.

3.09 INSTALLATION - SERVICE CONNECTIONS

A. Provide new water service complete with approved reduced pressure back-flow preventer and water meter with by-pass valves.

3.10 FIELD QUALITY CONTROL

A. Test domestic water piping system in accordance with applicable code.

3.11 CLEANING

A. Prior to starting work, verify system is complete, flushed and clean.

B. Verify pH of water to be treated is between 7.4 and 7.6 by adding alkali (caustic soda or soda ash) or acid (hydrochloric).

C. Inject disinfectant, free chlorine in liquid, powder and tablet or gas form, throughout system to obtain residual from 50 to 80 mg/L.

D. Bleed water from outlets to obtain distribution and test for disinfectant residual at minimum 15 percent of outlets.

E. Maintain disinfectant in system for 24 hours.

F. When final disinfectant residual tests less than 25 mg/L, repeat treatment.

G. Flush disinfectant from system until residual concentration is equal to incoming water or 1.0 mg/L.

H. Take samples no sooner than 24 hours after flushing, from 5 percent of outlets and from water entry, and analyze in accordance with AWWA C651.

3.12 SCHEDULES

A. Pipe Hanger Spacing:

PIPE MATERIAL	MAXIMUM HANGER SPACING Feet	HANGER ROD DIAMETER Inches
Copper Tube, 1-1/4 inches and smaller	6	1/2
Copper Tube, 1-1/2 inches and larger	10	1/2

END OF SECTION

SECTION 22 13 00
SANITARY WASTE VENT AND STORM PIPING

PART 1 GENERAL

1.01 SUMMARY

A. Section Includes:
1. Piping buried beyond 5 feet of building.
2. Piping buried within 5 feet of building.
3. Piping above grade.
4. Unions and flanges.
5. Pipe hangers and supports.
6. Floor drains.
7. Floor sinks.
8. Cleanouts.
9. Bedding and cover materials.

1.02 SUBMITTALS

A. Submit in accordance with the requirements of Division 1, Section 22 00 50, and this section.

B. Shop Drawings: Indicate dimensions, weights, and placement of openings and holes for sewage-ejectors, and manholes.

C. Product Data:
1. Piping: Submit data on pipe materials, fittings, and accessories. Submit manufacturers catalog information.
2. Hangers and Supports: Submit manufacturers catalog information including load capacity.
3. Sanitary Drainage Specialties: Submit manufacturers catalog information, component sizes, rough-in requirements, service sizes, and finishes.

D. Manufacturer's Installation Instructions: Submit installation instructions for material and equipment.

E. Project Record Documents: Record actual locations of piping, drains, clean-outs, etc.

1.03 DELIVERY, STORAGE, AND HANDLING

A. Deliver, store, and handle in accordance with the requirements of Division 1, Section 22 00 50, and this Section

B. Protect piping systems from entry of foreign materials by temporary covers, completing sections of the Work, and isolating parts of completed system.

1.04 FIELD MEASUREMENTS

A. Verify field measurements prior to fabrication.

PART 2 PRODUCTS

2.01 SANITARY, WASTE, VENT, AND STORM PIPING, BURIED BEYOND 5 FEET OF BUILDING

A. PVC Pipe: ASTM D2729, polyvinyl chloride (PVC) material, bell and spigot solvent sealed ends.
   1. Fittings: PVC, ASTM D2729.
   2. Joints: ASTM D2855, solvent weld with ASTM D2564 solvent cement.

2.02 SANITARY, WASTE, VENT, AND STORM PIPING, BURIED WITHIN 5 FEET OF BUILDING

A. PVC Pipe: ASTM D2729, polyvinyl chloride (PVC) material, bell and spigot solvent sealed ends.
   1. Fittings: PVC, ASTM D2729.
   2. Joints: ASTM D2855, solvent weld with ASTM D2564 solvent cement.

2.03 SANITARY, WASTE, VENT, AND STORM PIPING, ABOVE GRADE

A. PVC Pipe: ASTM D2729, polyvinyl chloride (PVC) material.
   1. Fittings: ASTM D2729, PVC.
   2. Joints: ASTM D2855, solvent weld with ASTM D2564 solvent cement.

2.04 UNIONS AND COUPLINGS

A. Unions for Pipe 2 inches and Smaller:
   1. PVC Piping: PVC.

B. PVC Pipe Materials: For connections to equipment and valves with threaded connections, furnish solvent-weld socket to screwed joint adapters and unions, or ASTM D2464, Schedule 80, threaded, PVC pipe.

2.05 PIPE HANGERS AND SUPPORTS

A. Drain, Waste, and Vent: Conform to ASME B31.9.

B. Hangers for Pipe Sizes 1-1/4 to 1-1/2 inch: Malleable iron, adjustable swivel, split ring.

C. Hangers for Pipe Sizes 2 inches and Larger: Carbon steel, adjustable, clevis.

D. Multiple or Trapeze Hangers: Steel channels with welded spacers and hanger rods.

E. Vertical Support: Steel riser clamp.

F. Floor Support: Cast iron adjustable pipe saddle, lock nut, nipple, floor flange, and concrete pier or steel support.

2.06 FLOOR DRAINS

A. Floor Drain (FD-1): ASME A112.21.1; lacquered cast iron two piece body with double drainage flange, weep holes, reversible clamping collar, and 6 inch diameter, round, adjustable nickel-bronze strainer. Provide trap primer connection at all locations shown on plans, and as required by code.

2.07 FLOOR SINKS

A. Floor Sink (FS-1): Square, lacquered cast iron body with dome strainer, nickel bronze frame. Provide grate appropriate for application. Top flush with floor (floor sink to function as floor drain in all locations).

B. Floor Sink (FS-2): Square, lacquered cast iron body with integral seepage pan, epoxy coated interior, aluminum dome strainer, clamp collar, nickel bronze frame. Provide grate appropriate for application. Top flush with floor (floor sink to function as floor drain in all locations).

2.08 CLEANOUTS

A. Exterior Surfaced Areas: Round cast nickel bronze access frame and non-skid cover.

B. Exterior Un-surfaced Areas: Line type with lacquered cast iron body and round epoxy coated cover with gasket.

C. Interior Finished Floor Areas: Lacquered cast iron body with anchor flange, threaded top assembly, and round scored cover with gasket in service areas and round depressed cover with gasket to accept floor finish in finished floor areas.

D. Interior Finished Wall Areas: Line type with lacquered cast iron body and round epoxy coated cover with gasket, and round stainless steel access cover secured with machine screw.

E. Interior Unfinished Accessible Areas: Calked or threaded type. Provide bolted stack cleanouts on vertical rainwater leaders.

PART 3 EXECUTION

3.01 EXAMINATION

A. Verify excavations are to required grade, dry, and not over-excavated.

3.02 PREPARATION

A. Ream pipe and tube ends. Remove burrs.

B. Remove scale and dirt, on inside and outside, before assembly.

C. Prepare piping connections to equipment with flanges or unions.

D. Keep open ends of pipe free from scale and dirt. Protect open ends with temporary plugs or caps.

3.03 INSTALLATION - HANGERS AND SUPPORTS

A. Inserts:
1. Provide inserts for placement in concrete forms.
2. Provide inserts for suspending hangers from reinforced concrete slabs and sides of reinforced concrete beams.
3. Provide hooked rod to concrete reinforcement section for inserts carrying pipe 4 inches and larger.
4. Where concrete slabs form finished ceiling, locate inserts flush with slab surface.
5. Where inserts are omitted, drill through concrete slab from below and provide through-bolt with recessed square steel plate and nut recessed into, and grouted flush with slab.

B. Pipe Hangers and Supports:
1. Install in accordance with ASME B31.9.
2. Support horizontal piping as scheduled.
3. Install hangers to provide minimum 1/2 inch space between finished covering and adjacent work.
4. Place hangers within 12 inches of each horizontal elbow.
5. Use hangers with 1-1/2 inch minimum vertical adjustment. Design hangers for pipe movement without disengagement of supported pipe.
6. Support vertical piping at every floor. Support riser piping independently of connected horizontal piping.
7. Where installing several pipes in parallel and at same elevation, provide multiple pipe hangers or trapeze hangers.
8. Prime coat exposed steel hangers and supports. Hangers and supports located in crawl spaces, pipe shafts, and suspended ceiling spaces are not considered exposed.

3.04 INSTALLATION - BURIED PIPING SYSTEMS

A. Verify connection to existing piping system size, location, and invert elevations are as indicated on Drawings.

B. Establish minimum separation from other services in accordance with code.

C. Remove scale and dirt on inside of piping before assembly.

D. Excavate pipe trench in accordance with site Civil specifications.

E. Place bedding material at trench bottom to provide uniform bedding for piping, level bedding materials in one continuous layer not exceeding 4 inches compacted depth; compact to 95 percent maximum density].

F. Install pipe on prepared bedding.

G. Route pipe in straight line.

H. Install plastic ribbon tape continuous over top of pipe, buried 6 inches below finish grade.

I. Pipe Cover and Backfilling:
   1. Backfill trench in accordance with site Civil specifications.
   2. Maintain optimum moisture content of fill material to attain required compaction density.
   3. After hydrostatic test, evenly backfill entire trench width by hand placing backfill material and hand tamping in 4 inches compacted layers to 12 inches minimum cover over top of jacket. Compact to 95 percent maximum density.
   4. Evenly and continuously backfill remaining trench depth in uniform layers with backfill material.
   5. Do not use wheeled or tracked vehicles for tamping.

3.05 INSTALLATION - ABOVE GROUND PIPING

A. Establish invert elevations, slopes for drainage to 1/8 inch per foot minimum. Maintain gradients.

B. Extend cleanouts to finished floor or wall surface. Lubricate threaded cleanout plugs with mixture of graphite and linseed oil. Provide clearances at cleanout for snaking drainage system.

C. Encase exterior cleanouts in concrete flush with grade.

D. Install floor cleanouts to be flush with finished floor.

E. Route piping in orderly manner and maintain gradient. Route parallel and perpendicular to walls.

F. Install piping to maintain headroom. Do not spread piping, conserve space.

G. Group piping whenever practical at common elevations.

H. Install piping to allow for expansion and contraction without stressing pipe, joints, or connected equipment.

I. Provide clearance in hangers and from structure and other equipment for installation of insulation.

J. Install piping penetrating roofed areas to maintain integrity of roof assembly.

K. Where pipe support members are welded to structural building framing, scrape, brush clean, and apply one coat of zinc rich primer to welding.

L. Install bell and spigot pipe with bell end upstream.

M. Sleeve pipes passing through partitions, walls and floors.

N. Install fire-stopping at penetrations of fire rated assemblies, maintain assembly rating.

3.06 FIELD QUALITY CONTROL

A. Test sanitary waste and vent piping system in accordance with applicable code.

3.07 SCHEDULES

PIPE HANGER SPACING		
PIPE MATERIAL	MAXIMUM HANGER SPACING Feet	HANGER ROD DIAMETER Inches
PVC (All Sizes)	4	3/8

END OF SECTION

SECTION 22 40 00
PLUMBING FIXTURES

PART 1 GENERAL

1.01 SUMMARY

A. Section Includes:
1. Water closets.
2. Urinals.
3. Lavatories.
4. Sinks.
5. Electric water coolers.
6. Service sinks.
7. Showers.
8. Laundry Tubs.

1.02 SUBMITTALS

A. Submit in accordance with the requirements of Division 1, Section 22 00 50, and this section.

B. Product Data: Submit catalog illustrations of fixtures, sizes, rough-in dimensions, utility sizes, trim, and finishes.

C. Manufacturer's Installation Instructions: Submit installation methods and procedures.

D. Operation and Maintenance Data: Submit fixture, trim, exploded view and replacement parts lists.

1.03 QUALITY ASSURANCE

A. Provide products requiring electrical connections listed and classified by Underwriters Laboratories Inc., as suitable for purpose specified and indicated.

B. Provide plumbing fixture fittings in accordance with ASME A112.18.1 that prevent backflow from fixture into water distribution system.

C. Maintain one copy of each document on site.

1.04 DELIVERY, STORAGE, AND HANDLING

A. Deliver, store, and handle in accordance with the requirements of Division 1, Section 22 00 50, and this Section.

B. Accept fixtures on site in factory packaging. Inspect for damage.

C. Protect installed fixtures from damage by securing areas and by leaving factory packaging in place to protect fixtures and prevent use.

PART 2 PRODUCTS

2.01 FLUSH VALVE WATER CLOSETS (WC-1):

A. Manufacturers:
1. Kohler WELLCOMME #K-4250-C.
2. American Standard.
3. Crane.
4. Eljier.
5. Substitutions: Permitted in accordance with the requirements of Division 1, Section 22 00 50, and this Section.

B. Bowl: ASME A112.19.2M; floor mounted, siphon jet 14 inch bowl height, ADA accessible vitreous china closet bowl, with elongated rim, 1-1/2 inch top spud, china bolt caps.

C. Exposed Flush Valve: ASME A112.18.1; exposed chrome plated, diaphragm type, escutcheon, seat bumper, integral screwdriver stop and vacuum breaker; maximum 1.6 gallon flush volume. Sloan Regal #8111, with G2, Optima Plus battery powered sensor operation.

D. Seat: Solid white plastic, open front, extended back, self-sustaining hinge, brass bolts, without cover. Olsonite #95C Comfort Curve.

2.02 FLOOR MOUNTED, FLUSH VALVE WATER CLOSET, BARRIER FREE (WC-1H):

A. Manufacturers:
1. Kohler HIGHCREST #K-4302.
2. American Standard.
3. Crane.
4. Eljier.
5. Substitutions: Permitted in accordance with the requirements of Division 1, Section 22 00 50, and this Section.

B. Bowl: ASME A112.19.2M; floor mounted, siphon jet 16-1/2 inch bowl height, ADA accessible vitreous china closet bowl, with elongated rim, 1-1/2 inch top spud, china bolt caps.

C. Exposed Flush Valve: ASME A112.18.1; exposed chrome plated, diaphragm type, escutcheon, seat bumper, integral screwdriver stop and vacuum breaker; maximum 1.6 gallon flush volume. Sloan Regal #8111, with G2, Optima Plus battery powered sensor operation.

D. Seat: Solid white plastic, open front, extended back, self-sustaining hinge, brass bolts, without cover. Olsonite #95C Comfort Curve.

2.03 WALL HUNG FLUSH VALVE WATER CLOSETS, (WC-2H):

A. Manufacturers:
1. Kohler KINGSTON #K-4330.
2. American Standard.
3. Crane.
4. Eljier.
5. Substitutions: Permitted in accordance with the requirements of Division 1, Section 22 00 50, and this Section.

B. Bowl: ASME A112.19.2M; wall mounted, siphon jet 16 inch bowl height, ADA accessible vitreous china closet bowl, with elongated rim, 1-1/2 inch top spud, china bolt caps.

C. Exposed Flush Valve: ASME A112.18.1; exposed chrome plated, diaphragm type with escutcheon, seat bumper, integral screwdriver stop and vacuum breaker; maximum 1.6 gallon flush volume. Sloan Regal #8111 with G2 Optima Plus battery powered operation.

D. Seat: Solid white plastic, open front, extended back, self-sustaining hinge, brass bolts, without. Olsonite #95C Comfort Curve.

E. Wall Mounted Carrier: ASME A112.6.1; adjustable cast iron frame, integral drain hub and vent, adjustable spud, lugs for floor and wall attachment, threaded fixture studs with nuts and washers.

2.04 WALL HUNG, FLUSH VALVE URINAL, BARRIER FREE (UR-1H):

A. Manufacturers:
1. Kohler BARDON #K-4960-ET
2. American Standard.
3. Crane.
4. Eljier.
5. Substitutions: Permitted in accordance with the requirements of Division 1, Section 22 00 50, and this Section.

B. Urinal: ASME A112.19.2M; vitreous china, wall hung siphon jet urinal with shields, integral trap, removable stainless steel strainer, 3/4 inch top spud, steel supporting hanger.

C. Exposed Flush Valve: ASME A112.18.1; exposed chrome plated, diaphragm type, escutcheon, integral screwdriver stop, vacuum breaker; maximum 1 gallon flush volume. Sloan Regal #8186-1.0, with G2, Optima Plus battery powered sensor operation.

D. Mount lip at height to comply with current barrier free requirements.

E. Wall Mounted Carrier: ASME A112.6.1; cast iron and steel frame with tubular legs, lugs for floor and wall attachment, threaded fixture studs for fixture hanger, bearing studs.

2.05 LAVATORY, WALL HUNG, (L-1):

A. Manufacturers:
1. Kohler GREENWICH #K-2032.
2. American Standard.
3. Crane.
4. Eljier.
5. Substitutions: Permitted in accordance with the requirements of Division 1, Section 22 00 50, and this Section.

B. Vitreous China Wall Hung Basin: ASME A112.19.2M; vitreous china wall hung lavatory 20 x 18 inch minimum, with 4 inch high back, drillings on 4 inch centers, rectangular basin with splash lip, front overflow, and soap depression.

C. Supply Fitting: ASME A112.18.1; chrome plated supply fitting with open grid strainer, water economy aerator with maximum 2.0 gpm flow. Sloan Optima E BF-650 battery powered, sensor operated, for hot and cold water connections.

D. Accessories (all chrome plated):
1. Chrome plated 17 gage brass P-trap with clean-out plug and arm with escutcheon.
2. Offset waste with perforated open strainer.
3. Commercial grade, loose key, angle supply stops.
4. Rigid or Flexible supplies.

E. Wall Mounted Carrier: ASME A112.6.1; cast iron and steel frame with tubular legs, lugs for floor and wall attachment, concealed arm supports, bearing plate and studs.

2.06 LAVATORY, WALL HUNG, BARRIER FREE (L-1H)

A. Manufacturers:
1. Kohler GREENWICH #K-2032.
2. American Standard.
3. Crane.
4. Eljier.
5. Substitutions: Permitted in accordance with the requirements of Division 1, Section 22 00 50, and this Section.

B. Vitreous China Wall Hung Basin: ASME A112.19.2M; vitreous china wall hung lavatory 20 x 18 inch minimum, with 4 inch high back, drillings on 4 inch centers, rectangular basin with splash lip, front overflow, and soap depression.

C. Supply Fitting: ASME A112.18.1; chrome plated supply fitting with open grid strainer, water economy aerator with maximum 2.0 gpm flow. Sloan Optima E BF-650 battery powered, sensor operated, for hot and cold water connections.

D. Accessories (all chrome plated):
   1. Chrome plated 17 gage brass P-trap with clean-out plug and arm with escutcheon.
   2. Offset waste with perforated open strainer.
   3. Commercial grade, loose key, angle supply stops.
   4. Rigid or Flexible supplies.
   5. Trap and waste insulated and offset to meet ADA compliance.
   6. ASSE 1070 tempering valve.

E. Wall Mounted Carrier: ASME A112.6.1; cast iron and steel frame with tubular legs, lugs for floor and wall attachment, concealed arm supports, bearing plate and studs. Mount at ADA compliant height.

2.07 SINK, SINGLE COMPARTMENT, COUNTER MOUNT (S-1H):

A. Manufacturers:
   1. Elkay LUSTERTONE DLR-1720.
   2. Just.
   3. Substitutions: Permitted in accordance with the requirements of Division 1, Section 22 00 50, and this Section.

B. Single Compartment Bowl: ASME A112.19.3; 17 x 20 inches outside dimensions 18 gage thick, Type 304 stainless steel. Self-rimming and undercoated, with 3-1/2 inch crumb cups and tailpieces, ledge back drilled for trim. Provide ADA compliant depth.

C. Trim: ASME A112.18.1; chrome plated brass supply with high rise swing spout, water economy aerator with maximum 2.2 gpm flow, lever handles to be ADA compliant.

D. Accessories: All Chrome Plated:
   1. Chrome plated 17 gage brass P-trap with clean-out plug and arm with escutcheon.
   2. Offset waste with perforated open strainer.
   3. Commercial grade, loose key, angle supply stops.
   4. Rigid or Flexible supplies.
   5. Trap and waste insulated and offset to meet ADA compliance.
   6. ASSE 1070 tempering valve.

2.08 ELECTRIC WATER COOLERS (EWC-1H):

A. Manufacturers:
   1. Elkay Model EHFA-8.
   2. Haws.
   3. Halsey-Taylor.
   4. Substitutions: Permitted in accordance with the requirements of Division 1, Section 22 00 50, and this Section.

B. Fountain:
1. ARI 1010; surface mounted, barrier free, electric water cooler with stainless steel top, stainless steel body, elevated anti-squirt bubbler with stream guard, automatic stream regulator, push button, mounting bracket, refrigerated with integral air cooled condenser and stainless steel grille.
2. Capacity: 8 gph of 50 degrees F water with inlet at 80 degrees F and room temperature of 80 degrees F.
3. Electrical: 120V, single phase, electrical receptacle.

2.09 SERVICE SINKS (SS-1):

A. Bowl: 24 x 24 x 10 inch high white molded stone, floor mounted, with one inch wide shoulders, vinyl bumper guard, and stainless steel strainer.

B. Trim: ASME A112.18.1 exposed wall type supply with cross handles, spout wall brace, vacuum breaker, hose end spout, strainers, eccentric adjustable inlets, integral screwdriver stops with covering caps and adjustable threaded wall flanges.

C. Accessories:
1. 5 feet of 1/2 inch diameter plain end reinforced rubber hose.
2. Hose clamp hanger.
3. Mop hanger.
4. Stainless steel wall guards.

2.10 SHOWER (SH-1):

A. Manufacturers:
1. Powers BILTMORE #P905.
2. Leonard
3. Symmons.
4. Substitutions: Permitted in accordance with the requirements of Division 1, Section 22 00 50, and this Section.

B. Pressure balancing water mixing valve for showers. Chrome plated ABS faceplate with color graphic insert for temperature indication, lever handle. Cast-brass valve body, diaphragm-type pressure balancing. Adjustable temperature limit, check-stops.

C. Type M1 deluxe chrome plated brass shower head, arm and flange.

2.11 SHOWER, BARRIER FREE (SH-1H):

A. Manufacturers:
1. Powers BILTMORE #P905.
2. Leonard
3. Symmons.
4. Substitutions: Permitted in accordance with the requirements of Division 1, Section 22 00 50, and this Section.

B. Pressure balancing water mixing valve for showers. Chrome plated ABS faceplate with color graphic insert for temperature indication, lever handle. Cast-brass valve body, diaphragm-type pressure balancing. Adjustable temperature limit, check-stops.

C. Professional vinyl hose and 24 inch slide bar.

PART 3 EXECUTION

3.01 EXAMINATION

A. Verify walls and floor finishes are prepared and ready for installation of fixtures.

B. Review millwork shop drawings to confirm adequate provision for installation of plumbing fixtures before ordering plumbing fixtures.

3.02 PREPARATION

A. Rough-in fixture piping connections in accordance with minimum sizes indicated in fixture rough-in schedule for particular fixtures.

3.03 INSTALLATION

A. Install each fixture with trap, easily removable for servicing and cleaning.

B. Provide chrome plated rigid or flexible supplies to fixtures. Provide commercial grade, loose key stops, reducers, and escutcheons.

C. Install components level and plumb.

D. Install and secure fixtures in place with wall supports, wall carriers and bolts.

E. Seal fixtures to wall and floor surfaces with caulk, color to match be selected and approved by Architect.

F. Solidly attach water closets to floor with lag screws. Lead flashing is not intended hold fixture in place.

G. For ADA accessible water closets, install flush valve with handle to “open” side of stall.

3.04 INTERFACE WITH OTHER PRODUCTS

A. Review millwork shop-drawings. Confirm location and size of fixtures and openings before rough-in and installation.

3.05 ADJUSTING

A. Adjust stops or valves for intended water flow rate to fixtures without splashing, noise, or overflow.

3.06 CLEANING

A. Clean plumbing fixtures and equipment.

3.07 PROTECTION OF INSTALLED CONSTRUCTION

A. Do not permit use of fixtures before final acceptance.

3.08 SCHEDULES

A. Fixture Rough-In:

Fixture	Hot inches	Cold inches	Waste inches	Vent inches
Water Closet:		1	4	2
Lavatory:	1/2	1/2	1-1/2	1-1/4
Sink:	1/2	1/2	1-1/2	1-1/4
Service Sink:	1/2	1/2	3	1-1/2
Electric Water Cooler:		1/2	1-1/4	1-1/4

END OF SECTION

DIVISION 23 00 00
HVAC SYSTEMS
TABLE OF CONTENTS

Section	Title
23 00 50	General HVAC Systems Requirements
23 05 53	Identification for HVAC Piping and Equipment
23 05 93	Testing, Adjusting, and Balancing for HVAC
23 07 00	HVAC Insulation
23 09 00	Instrumentation and Control for HVAC
23 09 23	Direct-Digital Control System for HVAC
23 09 93	Sequence of Operations for HVAC Controls
23 21 13	Hydronic Piping
23 21 16	Hydronic Piping Specialties
23 21 23	Hydronic Pumps.
23 31 00	HVAC Ducts and Casings.
23 33 00	Air Duct Accessories
23 34 00	HVAC Fans
23 37 00	Air Outlets and Inlets
23 52 34	Finned Water-Tube Boilers.
23 81 03	Packaged Rooftop Air Conditioning Units
23 81 26	Split-System Air-Conditioners
23 82 00	Convection Heating and Cooling Units

END OF SECTION

SECTION 23 00 50
GENERAL HVAC REQUIREMENTS

CONTENTS

PART 1 GENERAL

1.01 Applicable Standards.
1.02 Coordination.
1.03 Definitions.
1.04 Project Record Documents.
1.05 Project / Site Conditions.
1.06 Quality Control.
1.07 Regulatory Requirements.
1.08 Related Documents.
1.09 Responsibility.
1.10 Scope of Work
1.11 Storage and Protection.
1.12 Submittals.
1.13 Utility Connections.

PART 2 MATERIALS

2.01 Access Panels.
2.02 Motors and Starters.
2.03 Substitutions.
2.04 Temporary Heat.

PART 3 EXECUTION

3.01 Cutting and Patching.
3.02 Electrical Requirements.
3.03 Engineer’s Final Punch.
3.04 Final Adjusting.
3.05 Final Cleaning.
3.06 Progress Cleaning.
3.07 Removal of Temporary Utilities, Facilities, and Controls.
3.08 Rigging and Hoisting.
3.09 Starting of Systems.
3.10 Transportation and Handling.

PART 1 GENERAL

1.01 APPLICABLE STANDARDS

A. Refer to specific specification sections for reference standard that are applied in this specification.

B. Where referenced standards and code requirements both apply, the more stringent requirement shall be met.

1.02 COORDINATION

A. Coordinate work with all other Trades before installation to eliminate conflicts over available space.

B. Arrange with other Trades for the provision of all chases, slots, and openings necessary for the proper installation of the Mechanical Work.

C. Coordinate the installation of all required supporting devices.

D. Set sleeves in poured concrete construction and other structural components as they are constructed.

E. Where electrical connections are required, confirm available electrical characteristics with the project Electrical Contractor before item is ordered.

F. Where connections to Site Services are required, confirm location and elevation of same in the field before proceeding with the layout of the building systems.

1.03 DEFINITIONS

A. “Code”, “Regulation”, “Ordinance”, “Law”, and “Rule” are used interchangeably in this Specification to mean requirements of all authorities (local, State, Federal, or other) which may have jurisdiction over the construction of the work. Where one is used, all are implied.

B. “Concealed Exterior Installations” refers to exterior mechanical work that is protected from weather conditions and contact by building components, but is exposed to outdoor ambient temperatures.

C. “Concealed Interior Installations” refers to interior mechanical work that is concealed from physical contact by building components when the project is complete.

D. “Exposed Exterior Installations” refers to exterior mechanical work that is exposed to exterior ambient conditions and not protected from contact by permanent building components.

E. “Exposed Interior Installations” refers to interior mechanical work that is exposed to view in the final construction.

F. “Finished Spaces” are spaces that are generally accessible to the building staff and general public.

1.04 PROJECT RECORD DOCUMENTS

A. Provide in accordance with the requirements of Division 1 and other portions of this Division.

B. Maintain a “clean” set of project drawings for the sole purpose of recording deviations from the design. This set of drawings shall be maintained at the project site, with all modifications carefully marked-up as the work progresses.

C. This set of drawings shall show all work as actually installed with accurate vertical and horizontal measurements of concealed and buried work.

D. This set of Project Record Documents shall be certified as accurate by the Contractor and turned over to the Owner for future reference.

E. Additionally, the Contractor shall provide the Record Drawings in AutoCAD format to the Owner for his use. The AutoCad data shall be updated to reflect all of the actual conditions of installation for the entire project. The project design drawings will be made available to the Contractor by the design Engineer in AutoCAD 2007.

1.05 PROJECT / SITE CONDITIONS

A. Visit the project site before bidding to determine the actual existing conditions imposed on the construction of the work. The Contractor retains sole responsibility for interpreting the impact of existing conditions on his work.

1.06 QUALITY CONTROL

A. All work shall be performed by Contractors skilled in the work required with a minimum of three (3) years experience.

B. All materials shall be supplied by manufacturers having a minimum of three (3) years experience in the production of the item provided.

1.07 REGULATORY REQUIREMENTS

A. All work on this project shall be performed in accordance with all applicable codes, standards, and references.

B. Applicable Codes: All references to codes, specifications, and standards in the specifications sections and on the drawings shall mean and are intended to be the edition, amendment, or revision of such standard in effect at the date of these contract documents.

C. Obtain and pay for all required permits and inspections. Obtain certificates of such inspections, and provide copies of same to the Design Professional.

1.08 RELATED DOCUMENTS

A. The general conditions of the Contract, including Conditions of the Contract and Division 1 of the Specification.

B. Construction Drawings, all Addenda, Bulletins and Change Orders.

1.09 RESPONSIBILITY

A. Submission of a bid is considered evidence that the Contractor has visited the site, examined the Drawings and Specifications of all Trades, and has fully informed himself as to all Project conditions.

B. Submission of a bid implies the Contractor is proficient, experienced and knowledgeable of all regulations and conditions which may affect any portion of the Work included in his bid.

C. The Contractor is responsible to comply with the requirements of all of the construction documents provided for this project.

D. Where clarification is required with regard to which trade is responsible for a particular item of work, such clarification is to be requested of the design professional, in writing, in a timely manner.

1.10 SCOPE OF WORK

A. These specifications and the accompanying drawings describe the furnishing and installation of all material, equipment, supplies, labor and supervision required for the complete performance of all operations relating to the Mechanical Trades Work.

B. The work provided shall be complete in all respects and shall result in satisfactorily operating systems that have been approved for occupancy by the authority(ies) having jurisdiction.

C. This project consists generally of an addition to, and renovation of, an existing county jail facility. The jail shall remain in operation during the entire course of construction. Special security procedures will be implemented at the discretion of Sheriff staff which may cause the Contractor loss of work efficiency. No claim for extra compensation will be allowed for this condition.

D. Specific types of work to be accomplished under the mechanical trades work include, but are not limited to:

1. 23 00 50 General HVAC Systems Requirements.
2. 23 05 53 Identification for HVAC Piping and Equipment.
3. 23 05 93 Testing, Adjusting, and Balancing for HVAC.
4. 23 07 00 HVAC Insulation.
5. 23 09 00 Instrumentation and Control for HVAC.
6. 23 09 23 Direct-Digital Control System for HVAC.
7. 23 09 93 Sequence of Operations for HVAC Controls.
8. 23 11 23 Facility Natural-Gas Piping.

9. 23 21 13 Hydronic Piping.
10. 23 21 16 Hydronic Piping Specialties.
11. 23 21 23 Hydronic Pumps.
12. 23 25 00 HVAC Water Treatment.
13. 23 31 00 HVAC Ducts and Casings.
14. 23 33 00 Air Duct Accessories.
15. 23 34 00 HVAC Fans.
16. 23 37 00 Air Outlets and Inlets.
17. 23 52 34 Finned Water-Tube Boilers.
18. 23 81 03 Packaged Rooftop Air Conditioning Units.
19. 23 81 26 Split-System Air-Conditioners.
20. 23 82 00 Convection Heating and Cooling Units.

1.11 STORAGE AND PROTECTION

A. Refer to Division 1.

B. Store all materials and equipment to protect against damage of all types.

C. Provide appropriate barriers to maintain safe construction areas.

1.12 SUBMITTALS

A. Submittals for review, except color samples, shall be made to the engineer in pdf electronic format. The engineer will add his review stamp to the electronic format and return it to the contractor for his records.

B. Submittals for review shall be made prior to the purchase of materials. Submittal procedures shall be in accordance with Division 1 of these specifications, and the following:
   1. Submit copes for distribution with product data grouped to include complete submittals of related system, products, and accessories in a single submittal. Each submittal shall be clearly marked to indicate equipment number, specification section, etc., which the submittal describes.
   2. Mark dimensions and values in units to match those specified.
   3. Data must include job name, dimensions, capacities, construction characteristics, and installation instruction. Where applicable, submittal data must also include metal gauges, frame types, finish fan diameters, bearing types, lubrication system, motor types, insulation, velocities, pressure drops, pump curves, coil areas, filter types and areas, electrical characteristics, wiring and piping diagrams, and accessories required.
   4. Submittals must be thoroughly checked by the Contractor and must contain his stamp of approval before being sent to the Design Professional for review.
   5. Submittals not conforming to the above requirements will be returned without review.

C. The Design Professional will review shop drawings for general conformance to the construction documents. This review is provided as a convenience to the Contractor by the Design Professional. The Design Professional will review submitted information with reasonable care, however, no responsibility accrues to the Design Professional for errors of omission in the review of submitted materials. The Contractor retains complete, sole responsibility for providing materials and equipment that are in conformance to the construction documents.

D. Final "As-Built" drawings shall be submitted by the contractor in AutoCAD format. The design professional will, upon request, provide the AutoCAD design drawings for the Contractor's use. The Contractor shall modify the design drawings as necessary to accurately reflect the actual installation for this project.

1.13 UTILITY CONNECTIONS

A. Not used.

PART 2 MATERIALS

2.01 ACCESS PANELS

A. Provide access panels for all equipment which must be located in "in-accessible" locations (above fixed ceilings, behind walls, etc.). Access panels shall conform to the requirements of the General Trades Specifications. Turn panels over to the General Trades Contractor for installation. Provide fire rated access panel where such penetrations are through fire rated assemblies.

2.02 MOTORS AND STARTERS

A. Motors for the Mechanical equipment shall be furnished by this Contractor unless specifically noted to the contrary elsewhere.

B. The work shall be complete in every respect. Where starters, disconnects, etc., are not specifically indicated on the Electrical Trades Drawings and Specifications, they are to be provided by this Contractor.

C. All electrical equipment and installation provided by this Contractor shall conform to the requirements of Electrical Divisions of the specification.

D. Each motor shall have a conduit terminal box.

E. All motors shall have a power factor of 85%, or higher.

2.03 SUBSTITUTIONS

A. In the Drawings and Specifications materials and equipment are generally noted as "based on". The layout and arrangement of systems and equipment for this project are based on the size and arrangement of these manufacturers.

B. For major items of equipment, other manufacturers may be listed who manufacture equipment deemed to be “equal” by the Engineer. These items may be used at the Contractor’s option. It remains the Contractor’s responsibility to determine which item manufactured by the “alternate” company is equivalent to the item listed as “based on”, and to obtain the approval of the Engineer for all such “substitutions”.

C. In all cases where items other than those upon which the design is based are used, it is the Contractor’s responsibility to determine the impact of providing “alternate” equipment. Where “alternate” equipment is provided, the Contractor shall pay all charges, including design fees and charges by other Contractor’s, which may be necessary to accommodate the installation of the “alternate” equipment or materials.

2.04 TEMPORARY HEAT

A. Should permanent equipment be used for temporary heating, they shall be fitted with disposable type filters which will be changed at regular intervals. At the end of the temporary heating usage, and prior to contract closeout, the equipment (and ducts, etc.) shall be thoroughly cleaned and clean filters (as specified) installed. The Contractor shall be responsible for the operation, maintenance, and warranty of these units during the temporary operation of equipment and systems.

B. Include in the bid price the cost of all temporary heat that may be required to maintain temperatures required by all Trades for the duration of the project.

PART 3 EXECUTION

3.01 CUTTING AND PATCHING

A. Perform in accordance with the requirements of Division 1.

B. Perform, or cause to be performed, all cutting and patching necessary for the installation of the work, unless specifically noted to the contrary elsewhere.

C. No structural members shall be cut without written authorization from the Design Professional. All such cutting, when authorized, shall be done in strict accordance with the instructions of the Design Professional.

D. In general, roof and wall openings required for mechanical equipment and systems shall be provided by this Contractor. The size and location of these openings shall be the responsibility of this Contractor.

3.02 ELECTRICAL REQUIREMENTS

A. The electrical characteristics available for each item of mechanical equipment shall be confirmed with the project electrical contractor before the Mechanical Contractor orders the equipment.

3.03 ENGINEER'S FINAL PUNCH

A. A final punch of the project will only be performed after the following documents are received for review:
   1. Copies of acceptance certificates from local inspecting offices.
   2. Copy of the General Contractor's punch list with written verification that all items have been completed.
   3. Copy of the project Record Drawings.
   4. Copy of complete test and balance report for the project.

3.04 FINAL ADJUSTING

A. Adjust operating products and equipment to ensure smooth and unhindered operation.

3.05 FINAL CLEANING

A. Execute final cleaning prior to final inspection.

B. Clean interior and exterior surfaces exposed to view. Vacuum carpeted and soft surfaces where materials have been deposited due to the work of this Contactor.

C. Clean debris from site.

D. Remove waste and surplus materials, rubbish, and construction facilities from the site.

3.06 PROGRESS CLEANING

A. Maintain work areas free of waste materials, debris, and rubbish. Maintain site in a clean and orderly condition at all times.

B. All openings in piping and ductwork systems shall be protected during construction to prevent the entrance of foreign materials.

C. Before installing air inlets and outlets, remove all dirt, debris, and rubbish from inside, on and about air chambers, ducts, fans, register faces, etc. After installation, leave them ready for operation with exposed surfaces clean and ready for finishing.

D. Fixtures and equipment: All fixtures and equipment shall be cleaned. Clean floor drains.

E. All plates, polished, and bronzed surfaces shall be cleaned and polished.

3.07 REMOVAL OF TEMPORARY UTILITIES, FACILITIES, AND CONTROLS

A. Remove temporary equipment, facilities, and materials prior to Substantial Completion.

B. Clean and repair damage caused by installation or use of temporary work.

3.08 RIGGING AND HOISTING

A. Provide all rigging and hoisting necessary for the installation of the materials and equipment provided under this Division of work.

3.09 STARTING OF SYSTEMS

A. All systems fabricated on site shall be tested by the Contractor. Testing shall include the provision of all necessary equipment, labor, and fluids.

B. Notify the Design Professional and other inspection authorities at least 48 hours before the scheduled test, or sampling time.

C. Control devices, instrumentation, and similar items not designed to withstand the test pressures shall be removed, or otherwise protected prior to testing the systems.

D. Temperature Balance: Following completion of controls balancing, room temperatures are to be checked for adequacy and uniformity. Final adjustments will then be made to the systems to compensate for varied load conditions based on temperature balance.

E. Fixtures and equipment: All fixtures and equipment shall be cleaned. Clean floor drains.

F. All plates, polished, and bronzed surfaces shall be cleaned and polished.

G. Valves, faucets, automatic valves, etc., shall be properly adjusted and shall be quiet operating.

3.10 TRANSPORTATION AND HANDLING

A. Transport and handle all materials and equipment in accordance with the manufacturer’s directions.

END OF SECTION

SECTION 23 05 53
IDENTIFICATION FOR HVAC SYSTEMS

PART 1 GENERAL

1.01 SUMMARY

A. Section Includes:
1. Nameplates.
2. Tags.
3. Stencils.
4. Pipe markers.
5. Ceiling tacks.
6. Labels.
7. Lockout devices.

1.02 SUBMITTALS

A. Submit in accordance with the requirements of Division 1, Section 23 00 50, and this section.

B. Product Data: Submit manufacturers catalog literature for each product required.

C. Shop Drawings: Submit list of wording, symbols, letter size, and color coding for mechanical identification and valve chart and schedule, including valve tag number, location, function, and valve manufacturer's name and model number.

D. Manufacturer's Installation Instructions: Indicate installation instructions, special procedures, and installation.

E. Project Record Documents: Record actual locations of tagged valves and equipment; include valve tag numbers.

1.03 QUALITY ASSURANCE

A. Conform to ASME A13.1 for color scheme for identification of piping systems and accessories.

1.04 FIELD MEASUREMENTS

A. Verify field measurements prior to fabrication.

PART 2 PRODUCTS

2.01 NAMEPLATES

A. Product Description: Laminated three-layer plastic with engraved black letters on light contrasting background color.

2.02 TAGS

A. Plastic Tags:
1. Laminated three-layer plastic with engraved black letters on light contrasting background color. Tag size minimum 1-1/2 inches diameter.

B. Information Tags:
1. Clear plastic with printed "Danger," "Caution," or "Warning" and message; size 3-1/4 x 5-5/8 inches with grommet and self-locking nylon ties.

C. Tag Chart: Typewritten letter size list of applied tags and location in anodized aluminum frame.

2.03 STENCILS

A. Stencils: With clean cut symbols and letters of following size:
1. Ductwork and Equipment: 1-3/4 inches high letters.

B. Stencil Paint: As specified in Section 09 90 00, semi-gloss enamel, colors and lettering size conforming to ASME A13.1.

2.04 PIPE MARKERS

A. Color and Lettering: Conform to ASME A13.1.

B. Plastic Pipe Markers:
1. Factory fabricated, flexible, semi-rigid plastic, preformed to fit around pipe or pipe covering. Larger sizes may have maximum sheet size with spring fastener.

C. Plastic Underground Pipe Markers:
1. Bright colored continuously printed plastic ribbon tape, minimum 6 inches wide by 4 mil thick, manufactured for direct burial service.

2.05 CEILING TACKS

A. Description: Steel with 3/4 inch diameter color-coded head.

B. Color code as follows:
1. HVAC equipment: Yellow.
2. Fire dampers/smoke dampers: Red.
3. Heating/cooling valves: Blue.

2.06 LABELS

A. Description: Laminated Mylar, size 1.9 x 0.75 inches, adhesive backed with printed identification.

PART 3 EXECUTION

3.01 PREPARATION

A. Degrease and clean surfaces to receive adhesive for identification materials.

B. Prepare surfaces in accordance with paint manufacturer's requirements for stencil painting.

3.02 INSTALLATION

A. Install identifying devices after completion of coverings and painting.

B. Install plastic nameplates with corrosive-resistant mechanical fasteners.

C. Install labels with sufficient adhesive for permanent adhesion and seal with clear lacquer. For unfinished canvas covering, apply paint primer before applying labels.

D. Install tags using corrosion resistant chain. Number tags as approved by the Owner, coordinate with any existing numbering system.

E. Install underground plastic pipe markers 6 to 8 inches below finished grade, directly above buried pipe.

F. Identify air handling units, pumps, heat transfer equipment, etc., with plastic nameplates, or stencil painting. Identify in-line pumps and other small devices with tags. Submit proposed identification scheme for approval before proceeding with any installation.

G. Identify control panels and major control components outside panels with plastic nameplates.

H. Identify valves in main and branch piping with tags.

I. Tag automatic controls, instruments, and relays. Key to control schematic.

J. Identify piping, concealed or exposed, with plastic pipe markers. Identify service, flow direction, and pressure. Install in clear view and align with axis of piping. Locate identification not to exceed 10 feet on straight runs including risers and drops, adjacent to each valve and tee, at each side of penetration of structure or enclosure, and at each obstruction.

K. For exposed natural gas lines other than steel pipe, attach yellow pipe labels with "GAS" in black lettering, at maximum 5 foot spacing.

L. Identify ductwork with stenciled painting. Identify with air handling unit identification number and area served. Locate identification at air handling unit, at each side of penetration of structure or enclosure, and at each obstruction.

M. Provide ceiling tacks to locate valves or dampers above T-bar type panel ceilings. Locate in corner of panel closest to equipment.

END OF SECTION

SECTION 23 05 93
TESTING ADJUSTING AND BALANCING FOR HVAC

PART 1 GENERAL

1.01 SUMMARY

A. Section Includes:
1. Testing, adjusting, and balancing of air systems.
2. Testing, adjusting, and balancing of hydronic systems.
3. Measurement of final operating condition of HVAC systems.

1.02 SUBMITTALS

A. Submit in accordance with the requirements of Division 1, Section 23 00 50, and this section.

B. Prior to commencing Work, submit proof of latest calibration date of each instrument.

C. Test Reports: Indicate data on nationally recognized format for data sheet format.

D. Field Reports: Indicate deficiencies preventing proper testing, adjusting, and balancing of systems and equipment to achieve specified performance.

E. Prior to commencing Work, submit report forms or outlines indicating adjusting, balancing, and equipment data required. Include detailed procedures, agenda, sample report forms.

F. Submit draft copies of report for review prior to final acceptance of Project.

G. Furnish reports in letter size, 3-ring binder manuals, complete with table of contents page and indexing tabs, with cover identification at front and side. Include set of reduced drawings with air outlets and equipment identified to correspond with data sheets, and indicating thermostat locations.

H. Project Record Documents: Record actual locations of balancing valves and dampers. Include indication of set point.

I. Operation and Maintenance Data: Furnish final copy of testing, adjusting, and balancing report inclusion in operating and maintenance manuals.

1.03 QUALITY ASSURANCE

A. Perform Work in accordance with nationally recognized standards and procedures.

B. Prior to commencing Work, calibrate each instrument to be used.

1.04 QUALIFICATIONS

A. Agency: Company specializing in testing, adjusting, and balancing of systems specified in this section with nationally recognized certification.

1.05 SCHEDULING

A. Schedule and provide assistance in final adjustment and test of smoke evacuation system with Fire Authority.

PART 2 PRODUCTS

Not Used.

PART 3 EXECUTION

3.01 EXAMINATION

A. Verify systems are complete and operable before commencing work. Verify the following:
1. Systems are started and operating in safe and normal condition.
2. Temperature control systems are installed complete and operable.
3. Proper thermal overload protection is in place for electrical equipment.
4. Final filters are clean and in place. If required, install temporary media in addition to final filters.
5. Duct systems are clean of debris.
6. Fans are rotating correctly.
7. Fire and volume dampers are in place and open.
8. Air coil fins are cleaned and combed.
9. Access doors are closed and duct end caps are in place.
10. Air outlets are installed and connected.
11. Duct system leakage is minimized.
12. Hydronic systems are flushed, filled, and vented.
13. Pumps are rotating correctly.
14. Proper strainer baskets are clean and in place or in normal position.
15. Service and balancing valves are open.

3.02 PREPARATION

A. Furnish instruments required for testing, adjusting, and balancing operations.

B. Make instruments available to Architect/Engineer to facilitate spot checks during testing.

3.03 INSTALLATION TOLERANCES

A. Air Handling Systems: Adjust to within plus or minus 10 percent of design.

B. Air Outlets and Inlets: Adjust total to within plus 10 percent and minus 5 percent of design.

C. Hydronic Systems: Adjust to within plus or minus 10 percent of design.

3.04 ADJUSTING

A. Verify recorded data represents actual measured or observed conditions.

B. Permanently mark settings of valves, dampers, and other adjustment devices allowing settings to be restored. Set and lock memory stops.

C. After adjustment, take measurements to verify balance has not been disrupted. If disrupted, verify correcting adjustments have been made.

D. Report defects and deficiencies noted during performance of services, preventing system balance.

E. Leave systems in proper working order, replacing belt guards, closing access doors, closing doors to electrical switch boxes, and restoring thermostats to specified settings.

F. At final inspection, recheck random selections of data recorded in report. Recheck points or areas as selected and witnessed by Owner.

G. Check and adjust systems approximately six months after final acceptance and submit report.

3.05 AIR SYSTEM PROCEDURE

A. Adjust air handling and distribution systems to obtain required or design supply, return, and exhaust air quantities.

B. Make air quantity measurements in main ducts by Pitot tube traverse of entire cross sectional area of duct.

C. Measure air quantities at air inlets and outlets.

D. Adjust distribution system to obtain uniform space temperatures free from objectionable drafts.

E. Use volume control devices to regulate air quantities only to extent adjustments do not create objectionable air motion or sound levels. Effect volume control by using volume dampers located in ducts.

F. Vary total system air quantities by adjustment of fan speeds. Provide sheave drive changes to vary fan speed. Vary branch air quantities by damper regulation.

G. Provide system schematic with required and actual air quantities recorded at each outlet or inlet.

H. Measure static air pressure conditions on air supply units, including filter and coil pressure drops, and total pressure across fan. Make allowances for 50 percent loading of filters.

I. Adjust outside air automatic dampers, outside air, return air, and exhaust dampers for design conditions.

J. Measure temperature conditions across outside air, return air, and exhaust dampers to check leakage.

K. At modulating damper locations, take measurements and balance at extreme conditions.

L. Measure building static pressure and adjust supply, return, and exhaust air systems to obtain required relationship between each to maintain approximately 0.05 inches positive static pressure near building entries.

3.06 WATER SYSTEM PROCEDURE

A. Adjust water systems, after air balancing, to obtain design quantities.

B. Use calibrated fittings and pressure gauges to determine flow rates for system balance. Where flow-metering devices are not installed, base flow balance on temperature difference across various heat transfer elements in system.

C. Adjust systems to obtain specified pressure drops and flows through heat transfer elements prior to thermal testing. Perform balancing by measurement of temperature differential in conjunction with air balancing.

D. Effect system balance with automatic control valves fully open or in normal position to heat transfer elements.

E. Effect adjustment of water distribution systems by means of balancing cocks, valves, and fittings. Do not use service or shut-off valves for balancing unless indexed for balance point.

F. Where available pump capacity is less than total flow requirements or individual system parts, simulate full flow in one part by temporary restriction of flow to other parts.

3.07 SCHEDULES

A. Equipment Requiring Testing, Adjusting, and Balancing:
   1. HVAC Pumps.
   2. Water Tube Boilers.
   3. Air Cooled Refrigerant Condensers.
   4. Packaged Roof Top Heating/Cooling Units.
   5. Unit Air Conditioners.
   6. Air Coils.
   7. Terminal Heat Transfer Units.
   8. Air Handling Units.
   9. Fans.
   10. Air Filters.
   11. Air Inlets and Outlets.

B. Report Forms
   1. Title Page:
      a. Name of Testing, Adjusting, and Balancing Agency
      b. Address of Testing, Adjusting, and Balancing Agency
      c. Telephone and facsimile numbers of Testing, Adjusting, and Balancing Agency
      d. Project name
      e. Project location
      f. Project Architect
      g. Project Engineer
      h. Project Contractor
      i. Project altitude
      j. Report date
   2. Summary Comments:
      a. Design versus final performance
      b. Notable characteristics of system
      c. Description of systems operation sequence
      d. Summary of outdoor and exhaust flows to indicate building pressurization
      e. Nomenclature used throughout report
      f. Test conditions
   3. Instrument List:
      a. Instrument
      b. Manufacturer
      c. Model number
      d. Serial number
      e. Range
      f. Calibration date

   Provide the following forms for each and every occurrence of that item on the project. For example, an air handler will have an electric motor, include a form that indicates the noted information for that motor (as well as each of the other components of the air handler).

4. Electric Motors:
    a. Manufacturer
    b. Model/Frame
    c. HP/BHP and kW
    d. Phase, voltage, amperage; nameplate, actual, no load
    e. RPM
    f. Service factor
    g. Starter size, rating, heater elements
    h. Sheave Make/Size/Bore
5. V-Belt Drive:
    a. Identification/location
    b. Required driven RPM
    c. Driven sheave, diameter and RPM
    d. Belt, size and quantity
    e. Motor sheave diameter and RPM
    f. Center to center distance, maximum, minimum, and actual
6. Pump Data:
    a. Identification/number
    b. Manufacturer
    c. Size/model
    d. Impeller
    e. Service
    f. Design flow rate, pressure drop, BHP and kW
    g. Actual flow rate, pressure drop, BHP and kW
    h. Discharge pressure
    i. Suction pressure
    j. Total operating head pressure
    k. Shut off, discharge and suction pressures
    l. Shut off, total head pressure
7. Combustion Test:
    a. Manufacturer
    b. Model number
    c. Serial number
    d. Firing rate
    e. Overfire draft
    f. Gas meter timing dial size
    g. Gas meter time per revolution
    h. Gas pressure at meter outlet
    i. Gas flow rate
    j. Heat input
    k. Burner manifold gas pressure
    l. Percent carbon monoxide (CO)
    m. Percent carbon dioxide (CO2)
    n. Percent oxygen (O2)
    o. Percent excess air
    p. Flue gas temperature at outlet
    q. Ambient temperature
    r. Net stack temperature
    s. Percent stack loss
    t. Percent combustion efficiency
    u. Heat output

8. Air Cooled Condenser:
    a. Identification/number
    b. Location
    c. Manufacturer
    d. Model number
    e. Serial number
    f. Entering DB air temperature, design and actual
    g. Leaving DB air temperature, design and actual
    h. Number of compressors
9. Cooling Coil Data:
    a. Identification/number
    b. Location
    c. Service
    d. Manufacturer
    e. Air flow, design and actual
    f. Entering air DB temperature, design and actual
    g. Entering air WB temperature, design and actual
    h. Leaving air DB temperature, design and actual
    i. Leaving air WB temperature, design and actual
    j. Water flow, design and actual
    k. Water pressure drop, design and actual
    l. Entering water temperature, design and actual
    m. Leaving water temperature, design and actual
    n. Saturated suction temperature, design and actual
    o. Air pressure drop, design and actual
10. Heating Coil Data:
    a. Identification/number
    b. Location
    c. Service
    d. Manufacturer
    e. Air flow, design and actual
    f. Water flow, design and actual
    g. Water pressure drop, design and actual
    h. Entering water temperature, design and actual
    i. Leaving water temperature, design and actual
    j. Entering air temperature, design and actual
    k. Leaving air temperature, design and actual
    l. Air pressure drop, design and actual

11. Air Moving Equipment:
    a. Location
    b. Manufacturer
    c. Model number
    d. Serial number
    e. Arrangement/Class/Discharge
    f. Air flow, specified and actual
    g. Return air flow, specified and actual
    h. Outside air flow, specified and actual
    i. Total static pressure (total external), specified and actual
    j. Inlet pressure
    k. Discharge pressure
    l. Sheave Make/Size/Bore
    m. Number of Belts/Make/Size
    n. Fan RPM
12. Return Air/Outside Air Data:
    a. Identification/location
    b. Design air flow
    c. Actual air flow
    d. Design return air flow
    e. Actual return air flow
    f. Design outside air flow
    g. Actual outside air flow
    h. Return air temperature
    i. Outside air temperature
    j. Required mixed air temperature
    k. Actual mixed air temperature
    l. Design outside/return air ratio
    m. Actual outside/return air ratio
13. Exhaust Fan Data:
    a. Location
    b. Manufacturer
    c. Model number
    d. Serial number
    e. Air flow, specified and actual
    f. Total static pressure (total external), specified and actual
    g. Inlet pressure
    h. Discharge pressure
    i. Sheave Make/Size/Bore
    j. Number of Belts/Make/Size
    k. Fan RPM

14. Duct Traverse:
    a. System zone/branch
    b. Duct size
    c. Area
    d. Design velocity
    e. Design air flow
    f. Test velocity
    g. Test air flow
    h. Duct static pressure
    i. Air temperature
    j. Air correction factor
15. Duct Leak Test:
    a. Description of ductwork under test
    b. Duct design operating pressure
    c. Duct design test static pressure
    d. Duct capacity, air flow
    e. Maximum allowable leakage duct capacity times leak factor
    f. Test apparatus
        1) Blower
        2) Orifice, tube size
        3) Orifice size
        4) Calibrated
    g. Test static pressure
    h. Test orifice differential pressure
    i. Leakage
16. Air Distribution Test Sheet:
    a. Air terminal number
    b. Room number/location
    c. Terminal type
    d. Terminal size
    e. Area factor
    f. Design velocity
    g. Design air flow
    h. Test (final) velocity
    i. Test (final) air flow
    j. Percent of design air flow

END OF SECTION

SECTION 23 07 00
HVAC INSULATION

PART 1 GENERAL

1.01 SUMMARY

A. Section Includes:
1. HVAC Piping Insulation.
2. HVAC Piping Insulation Accessories.
3. HVAC Ductwork Insulation.
4. HVAC Ductwork Insulation Accessories.

1.02 SUBMITTALS

A. Submit in accordance with the requirements of Division 1, Section 23 00 50, and this section.

B. Product Data: Submit product description, thermal characteristics and list of materials and thickness for each service, and location.

C. Manufacturer's Installation Instructions: Submit manufacturers published literature indicating proper installation procedures.

1.03 QUALITY ASSURANCE

A. Test pipe insulation for maximum flame spread index of 25 and maximum smoke developed index of not exceeding 50 in accordance with ASTM E84.

B. Pipe insulation manufactured in accordance with ASTM C585 for inner and outer diameters.

C. Factory fabricated fitting covers manufactured in accordance with ASTM C450.

D. Duct insulation, Coverings, and Linings: Maximum 25/50 flame spread/smoke developed index, when tested in accordance with ASTM E84, using specimen procedures and mounting procedures of ASTM E 2231.

1.04 DELIVERY, STORAGE, AND HANDLING

A. Deliver, store, and handle in accordance with the requirements of Division 1, Section 23 00 50, and this Section.

B. Accept materials on site in original factory packaging, labeled with manufacturer's identification, including product density and thickness.

C. Protect insulation from weather and construction traffic, dirt, water, chemical, and damage, by storing in original wrapping.

1.05 ENVIRONMENTAL REQUIREMENTS

A. Install insulation only when ambient temperature and humidity conditions are within range recommended by manufacturer.

B. Maintain recommended temperatures before, during, and after installation for minimum period recommended by manufacturer.

1.06 FIELD MEASUREMENTS

A. Verify field measurements prior to fabrication.

PART 2 PRODUCTS

2.01 PIPE INSULATION

A. TYPE P-1: ASTM C547, molded glass fiber pipe insulation.
1. Thermal Conductivity: 0.23 at 75 degrees F.
2. Operating Temperature Range: 0 to 850 degrees F.
3. Vapor Barrier Jacket: ASTM C1136, Type I, factory applied reinforced foil kraft with self-sealing adhesive joints.
4. Jacket Temperature Limit: minus 20 to 150 degrees F.

B. TYPE P-2: ASTM C547, molded glass fiber pipe insulation.
1. Thermal Conductivity: 0.23 at 75 degrees F.
2. Operating Temperature Range: 0 to 850 degrees F.

C. TYPE P-5: ASTM C534, Type I, flexible, closed cell elastomeric insulation, tubular.
1. Thermal Conductivity: 0.27 at 75 degrees F.
2. Operating Temperature Range: Range: Minus 70 to 180 degrees F.

2.02 PIPE INSULATION ACCESSORIES

A. Vapor Retarder Lap Adhesive: Compatible with insulation.

B. Covering Adhesive Mastic: Compatible with insulation.

C. Piping 1-1/2 inches diameter and smaller: Galvanized steel insulation protection shield. MSS SP-69, Type 40. Length: Based on pipe size and insulation thickness.

D. Piping 2 inches diameter and larger: Wood insulation saddle, hard maple. Inserts length: not less than 6 inches long, matching thickness and contour of adjoining insulation.

E. Closed Cell Elastomeric Insulation Pipe Hanger: Polyurethane insert with single piece construction with self-adhesive closure. Thickness to match pipe insulation.

F. Tie Wire: 0.048 inch stainless steel with twisted ends on maximum 12 inch centers.

G. Mineral Fiber Hydraulic-Setting Thermal Insulating and Finishing Cement: ASTM C449/C449M.

H. Insulating Cement: ASTM C195; hydraulic setting on mineral wool.

I. Adhesives: Compatible with insulation.

2.03 DUCTWORK INSULATION

A. TYPE D-1: ASTM C1290, Type III, flexible glass fiber, commercial grade with factory applied reinforced aluminum foil jacket meeting ASTM C1136, Type II.
1. Thermal Conductivity: 0.30 at 75 degrees F.
2. Maximum Operating Temperature: 250 degrees F.
3. Density: 0.75 pound per cubic foot.

B. TYPE D-2: ASTM C578, Type XIII, polystyrene insulation, flat board.
1. Thermal Conductivity: 180 day aged value of 0.259 at 75 degrees F.
2. Operating Temperature Range: Range: Minus 297 to 165 degrees F.

C. TYPE D-5: ASTM C1071, Type II, rigid, glass fiber duct liner with coated air side.
1. Thermal Conductivity: 0.23 at 75 degrees F.
2. Density: 3.0 pound per cubic foot.
3. Maximum Operating Temperature: 250 degrees F.
4. Maximum Air Velocity: 4,000 feet per minute.

2.04 DUCTWORK INSULATION ACCESSORIES

A. Vapor Retarder Tape:
1. Kraft paper reinforced with glass fiber yarn and bonded to aluminized film, with pressure sensitive rubber based adhesive.

B. Vapor Retarder Lap Adhesive: Compatible with insulation.

C. Adhesive: Waterproof, ASTM E162 fire-retardant] type.

D. Liner Fasteners: Galvanized steel, self-adhesive pad with integral head.

E. Tie Wire: 0.048 inch stainless steel with twisted ends on maximum 12 inch centers.

F. Lagging Adhesive: Fire retardant type with maximum 25/450 flame spread/smoke developed index when tested in accordance with ASTM E84.

G. Impale Anchors: Galvanized steel, 12 gage self-adhesive pad.

H. Adhesives: Compatible with insulation.

I. Membrane Adhesives: As recommended by membrane manufacturer.

PART 3 EXECUTION

3.01 EXAMINATION

A. Verify piping, and ductwork has been tested before applying insulation materials.

B. Verify surfaces are clean and dry, with foreign material removed.

3.02 INSTALLATION - PIPING SYSTEMS

A. Piping Exposed to View in Finished Spaces: Locate insulation and cover seams in least visible locations.

B. Continue insulation through penetrations of building assemblies or portions of assemblies having fire resistance rating of one hour or less. Provide intumescent fire-stopping when continuing insulation through assembly. Finish at supports, protrusions, and interruptions.

C. Piping Systems Conveying Fluids Below Ambient Temperature:
1. Insulate entire system including fittings, valves, unions, flanges, strainers, flexible connections, pump bodies, and expansion joints.
2. Furnish factory-applied or field-applied vapor retarder jackets. Secure factory-applied jackets with pressure sensitive adhesive self-sealing longitudinal laps and butt strips. Secure field-applied jackets with outward clinch expanding staples and seal staple penetrations with vapor retarder mastic.
3. Insulate fittings, joints, and valves with molded insulation of like material and thickness as adjacent pipe. Finish with glass cloth and vapor retarder adhesive or PVC fitting covers.

D. Hot Piping Systems greater than 140 degrees F:
1. Furnish factory-applied or field-applied standard jackets. Secure with outward clinch expanding staples or pressure sensitive adhesive system on standard factory-applied jacket and butt strips or both.
2. Insulate fittings, joints, and valves with insulation of like material and thickness as adjoining pipe. Finish with glass cloth and adhesive or PVC fitting covers.
3. Insulate flanges and unions at equipment.

E. Inserts and Shields:
1. Piping Conveying Fluids Below Ambient Temperature: Install galvanized steel shield between pipe hanger and insulation.
   a. Insert Configuration: Minimum 6 inches long, of thickness and contour matching adjoining insulation; may be factory fabricated.
   b. Insert Material: Compression resistant insulating material suitable for planned temperature range and service.

F. Insulation Terminating Points:
1. Coil Branch Piping 1 inch and Smaller: Terminate hot water piping at union upstream of the coil control valve.
2. Chilled Water Coil Branch Piping: Insulate chilled water piping and associated components up to coil connection.
3. Condensate Piping: Insulate entire piping system and components to prevent condensation.

G. Closed Cell Elastomeric Insulation:
1. Push insulation on to piping.
2. Miter joints at elbows.
3. Seal seams and butt joints with manufacturer’s recommended adhesive.

4. When application requires multiple layers, apply with joints staggered.
5. Insulate fittings and valves with insulation of like material and thickness as adjacent pipe.

H. Heat Traced Piping Interior to Building: Insulate fittings, joints, and valves with insulation of like material, thickness, and finish as adjoining pipe. Size large enough to enclose pipe and heat tracer.

I. Heat Traced Piping Exterior to Building: Insulate fittings, joints, and valves with insulation of like material, thickness, and finish as adjoining pipe. Size insulation large enough to enclose pipe and heat tracer.

3.03 INSTALLATION - DUCTWORK SYSTEMS

A. Duct dimensions indicated on Drawings are finished inside dimensions.

B. Insulated ductwork conveying air below ambient temperature:
1. Provide insulation with vapor retarder jackets.
2. Finish with tape and vapor retarder jacket.
3. Continue insulation through walls, sleeves, hangers, and other duct penetrations.
4. Insulate entire system including fittings, joints, flanges, fire dampers, flexible connections, and expansion joints.

C. External Glass Fiber Duct Insulation:
1. Secure insulation with vapor retarder with wires and seal jacket joints with vapor retarder adhesive or tape to match jacket.
2. Secure insulation without vapor retarder with staples, tape, or wires.
3. Install without sag on underside of ductwork. Use adhesive or mechanical fasteners where necessary to prevent sagging. Lift ductwork off trapeze hangers and insert spacers.
4. Seal vapor retarder penetrations by mechanical fasteners with vapor retarder adhesive.
5. Stop and point insulation around access doors and damper operators to allow operation without disturbing wrapping.

D. Duct Liner:
1. Adhere insulation with adhesive for 100 percent coverage.
2. Secure insulation with mechanical liner fasteners. Comply with SMACNA Standards for spacing.
3. Seal and smooth joints. Seal and coat transverse joints.
4. Seal liner surface penetrations with adhesive.
5. Cut insulation for tight overlapped corner joints. Support top pieces of liner at edges with side pieces.

3.04 SCHEDULES

A. Cooling Services Piping Insulation Schedule:

PIPING SYSTEM	INSULATION TYPE	PIPE SIZE	INSULATION THICKNESS
Refrigerant Suction	P-5	All sizes	½”
Refrigerant Hot Gas	P-5	All sizes	½”

B. Heating Services Piping Insulation Schedule:

PIPING SYSTEM	INSULATION TYPE	PIPE SIZE	INSULATION THICKNESS
Heating Water Supply and Return	P-1	3 inches and smaller 4 inches and larger	1” 1-1/2”

C. Ductwork Insulation Schedule:

DUCTWORK SYSTEM	INSULATION TYPE	INSULATION THICKNESS
Combustion Air	D-2	2”
Outside Air Intake	D-2	2”
Ducts within 15 feet of fan	D-5	1”
Supply Ducts	D-1	1-1/2”
Ducts exterior to building	D-2	3”
Exhaust Ducts Within 10 feet of Exterior Openings	D-1	1-1/2”
Supply Ducts Downstream of Variable Air Volume Boxes	D-5	1”
Transfer Air Ducts	D-5	1”

END OF SECTION

SECTION 23 0□00
INSTRUMENTATION AND CONTROL FOR HVAC

PART 1 GENERAL

1.01 SUMMARY

A. Section Includes:
1. Control panel enclosures.
2. Thermostats.
3. Time clocks.
4. Alarm system.
5. Electric damper actuators.
6. Control valves.
7. Electric valve actuators.
8. Outside air measuring and modulation device.
9. Direct digital control system components.
10. Duct-mounted smoke detector.
11. Differential pressure monitor.

1.02 SUBMITTALS

A. Submit in accordance with the requirements of Division 1, Section 23 00 50, and this section.

B. Shop Drawings: Indicate operating data, system drawings, wiring diagrams, and written detailed operational description of sequences.

C. Product Data: Submit description and engineering data for each control system component. Include sizing as required.

D. Design Data: Indicate data for sizing of air tubing.

E. Manufacturer's Installation Instructions: Submit installation requirements for each control component.

F. Project Record Documents: Record actual locations of control components, including panels, thermostats, and sensors.

G. Operation and Maintenance Data: Submit inspection period, cleaning methods, recommended cleaning materials, and calibration tolerances.

1.03 DELIVERY, STORAGE, AND HANDLING

A. Deliver, store, and handle in accordance with the requirements of Division 1, Section 23 00 50, and this Section.

B. Accept controls on site in original factory packaging Inspect for damage.

1.04 MAINTENANCE SERVICE

A. Furnish service and maintenance of control system for one year from Date of Substantial Completion.

B. Include systematic examination, adjustment, and lubrication of unit, and controls checkout and adjustments. Repair or replace parts in accordance with manufacturer's operating and maintenance data. Use parts produced by manufacturer of original equipment.

C. Perform work without removing units from service during building normal occupied hours.

D. Do not assign or transfer maintenance service to agent or subcontractor without prior written consent of Owner.

PART 2 PRODUCTS

2.01 CONTROL PANEL ENCLOSURES

A. Furnish for each system under automatic control with relays and controls mounted in cabinet and temperature indicators, pilot lights, push buttons and switches flush on cabinet panel face.

B. Construction: NEMA 250, steel enclosure.

C. Covers: Continuous hinge, held closed by flush latch operable by key.

D. Enclosure Finish: Manufacturer's standard enamel.

2.02 THERMOSTATS

A. Electric Room Thermostats:
1. Type: NEMA DC 3, 24 volts, with setback/setup temperature control.
2. Service: Cooling and heating.
3. Covers: Locking with set point adjustment.

B. Line Voltage Thermostats:
1. Integral manual On/Off/Auto selector switch, single or two-pole.
2. Dead band: Maximum 2 degrees F.
3. Cover: Locking with set point adjustment.
4. Load [Motor] capacity rating.

C. Room Thermostat Accessories:
1. Thermostat Covers: Brushed aluminum.
2. Insulating Bases: For thermostats located on exterior walls.
3. Thermostat Guards: Locking transparent plastic where appropriate..
4. Adjusting Key: Matching device.

D. Outdoor Reset Thermostat: Remote bulb or bimetal rod and tube type, proportioning action with adjustable throttling range, adjustable set-point.

E. Immersion Thermostat: Remote bulb or bimetallic rod and tube type, proportional action with adjustable set-point and adjustable throttling range.

F. Air-stream Thermostats:
1. Remote bulb or bimetallic rod and tube type, proportional action with adjustable set-point in middle of range and adjustable throttling range.
2. Averaging service remote bulb element: 7.5 feet.
3. Furnish with flange and shield.

G. Electric Low Limit Duct Thermostat:
1. Snap acting, single pole, single throw, manual reset switch tripping when temperature sensed across any 12 inches of bulb length is equal to or below set point.
2. Bulb length: Minimum 20 feet.
3. Furnish one thermostat for every 20 sq. ft of coil surface.

H. Electric High Limit Duct Thermostat:
1. Snap acting, single pole, single throw, manual reset switch tripping when temperature sensed across any 12 inches of bulb length is equal to or above set point.
2. Bulb length: Minimum 20 feet.
3. Furnish one thermostat for every 20 sq. ft of coil surface.

I. Fire Thermostats:
1. UL labeled, factory set in accordance with NFPA 90A.
2. Normally closed contacts, manual reset.

J. Heating/Cooling Valve Top Thermostats: Proportional acting for proportional flow, molded rubber diaphragm, remote bulb liquid filled element, direct and reverse acting at differential pressure to 25 psig, cast housing with position indicator and adjusting knob.

2.03 TIME CLOCKS

A. Solid-state programmable time control with at least four (4) separate programs, 24 hour battery carry over 7 day programming, 365 day calendar with 20 programmable holidays (minimum) system fault alarm.

2.04 ALARM SYSTEM

A. Enclosure Construction: NEMA 250, steel.

B. Furnish alarm panel with individual indication, horn, silenced acknowledge switch, and test switch.

C. At alarm condition indication, light flashes and alarm sounds. Horn stops when acknowledge switch is pushed and system indicates alarm conditions by continuous light until trouble condition has cleared. Alarm sounds again when second alarm occurs before first one has cleared.

D. Furnish remote panels with duplicate functions of primary panel. Furnish alarm silence/acknowledge switch to acknowledge alarm from each panel.

E. Furnish dry contacts at main alarm panel for use with remote alarm monitoring system to indicate each alarm condition.

2.05 CONTROL AIR DAMPERS

A. Performance: Test in accordance with AMCA 500.

B. Frames: Galvanized steel, welded or riveted with corner reinforcement, minimum 12 gage.

C. Blades: Galvanized steel, maximum blade size 8 inches wide, 48 inches long, minimum 22 gage, attached to minimum 1/2 inch shafts with set screws.

D. Blade Seals: Synthetic elastomeric mechanically attached, field replaceable.

E. Jamb Seals: Stainless steel spring.

F. Shaft Bearings: Oil impregnated sintered.

G. Linkage Bearings: Oil impregnated sintered bronze.

H. Outside Air Damper Leakage: Maximum leakage rate of 3.0 cfm per square foot at 1.0 inches wg pressure differential.

I. Damper Leakage: Less than one percent based on approach velocity of 2000 fpm and 4 inches wg.

J. Maximum Pressure Differential: 6 inches wg.

K. Temperature Limits: - 40 to 200 degrees F.

2.06 ELECTRIC DAMPER ACTUATORS

A. Mounting: Direct mount.

B. Stroke: 90 seconds end to end full stroke, 15 seconds return to normal for spring return.

C. Protection: Electronic stall protection.

D. Control Input: 0-10 VDC or 0-20 mA DC.

E. Power: Nominal 24 volt AC.

F. Torque: Size for minimum 150 percent of required duty.

G. Duty cycle: Rated for 65,000 cycles.

H. Accessories:
1. Cover mounted transformer.
2. Auxiliary potentiometer.
3. Damper linkage.
4. Direct drive feedback potentiometer.
5. Output position feedback.
6. Field selectable rotational, spring return direction, field adjustable zero and span.
7. End switch.

2.07 CONTROL VALVES

A. Globe Pattern:
1. 2 inches and Smaller: Bronze body, bronze trim, rising stem, renewable composition disc, screwed ends with back seating capacity packable under pressure.
2. 2-1/2 inches and Larger: Iron body, bronze trim, rising stem, plug-type disc, flanged ends, renewable seat and disc.
3. Hydronic Systems:
   a. Rate for service pressure of 125 psig at 250 degrees F.
   b. Replaceable plugs and seats of stainless steel.
   c. Sizing: Size for 3 psig maximum pressure drop at design flow rate.
   d. Furnish two-way valves with equal percentage characteristics. Furnish three way valves with linear characteristics. Size two way valve actuators to close valves against pump shut off head.

B. Ball Valves:
1. Threaded ends for 2-way valves 3 inches and smaller. Threaded ends for 3-way valves 2 inches and smaller.
2. Forged brass body, chrome plated brass ball and blowout proof stem and EPDM O-rings with minimum 600 psig rating.
3. Fluid Temperature Range: minus 20 to 250 degrees F.
4. Sizing: 3 psig maximum pressure drop at design flow rate.
5. Flow Characteristics: Furnish 2-way valves with equal percentage characteristics. Furnish 3-way valves with equal percentage characteristic through control port and linear characteristic through bypass port.
6. Size 2-way valve actuators to close valves against pump shut off head.

C. Terminal Unit Control Valves:
1. Brass body, Class 250, nickel plated brass ball, with optimizer insert for modulating applications, blow out resistant stem, threaded ends.
2. Two or three way as indicated in schedule or on Drawings.
3. Integral actuator.
4. Spring return required for unit ventilator heating valves and other terminal equipment with outside air.
5. Furnish non-spring return valves with manual override capability built into actuator.

6. Minimum Fluid Temperature: 20 degrees F.
7. Maximum Operating Conditions: 250 degrees F.
8. Sizing: 3 psig maximum pressure drop at design flow rate, to close against pump shutoff head.
9. Flow Characteristics: Furnish two-way and three-way valves with equal percentage characteristics.

2.08 ELECTRIC VALVE ACTUATORS

A. Fully factory assembled. Size to operate with sufficient reserve power to provide smooth modulating action or two-position action under every condition.

B. Motor: Permanent split-capacitor or shaded-pole type. Gear trains completely oil immersed and sealed. Furnish spring-return motors with integral spiral-spring mechanism in housings designed for easy removal for service or adjustment of limit switches, auxiliary switches, or feedback potentiometer.

C. Actuator: Direct-coupled type non-hydraulic designed for minimum 100,000 full-stroke cycles at rated torque. Furnish actuator with rating of not less than twice thrust needed for actual operation of valve.
1. Coupling: V-bolt and V-shaped, toothed cradle.
2. Overload Protection: Electronic overload or digital rotation-sensing circuitry.
3. Fail-Safe Operation: Mechanical, spring-return mechanism. Furnish external, manual gear release on non-spring-return actuators.
4. Furnish spring-return actuators with manual override. Complete manual override to take no more than 10 turns.
5. Power Requirements:
   a. Two-Position Spring Return: 24 volt AC or DC, maximum 10 vA.
   b. Modulating: 24 volt AC, maximum 15 vA.
6. Proportional Signal: 2 to 10 volt dc or 4 to 20 mA, and 2 to 10 volt dc position feedback signal.
7. Temperature Rating: minus 22 to 140 degrees F.
8. Run Time: 200 seconds open, 40 seconds closed.

D. Size for torque required for valve close-off at maximum pump differential pressure, regardless of water loop system pressures.

2.09 DIRECT DIGITAL CONTROL SYSTEM COMPONENTS

A. Temperature Sensors:
1. Type: Resistance temperature detector (RTD) or thermistor.
2. Accuracy:
   a. Plus or minus 1 degree F for standard applications. Where high accuracy is required, furnish accuracy of plus or minus 0.2 degrees F.
   b. Sensing Accuracy: Plus or minus 0.5 degree F.
   c. Display Accuracy and Resolution: Minimum of plus or minus 1 degree F.
3. Built-in communications port.
4. Space Sensors: Digital with LCD display, day-night override button, and set point slide adjustment override options. Set point slide adjustment capable of being software limited by automation system to limit amount of room adjustment.

5. Outside Air Sensors: Watertight inlet fitting, furnish with shield from direct sunlight.
6. Duct Temperature Sensors:
   a. Rigid or averaging type as indicated in sequence of operations. Averaging sensor minimum length: 5 feet in length.
   b. Duct Cross Sections Greater Than 10 square feet: Furnish serpentine averaging element to sense stratified air temperatures.
7. Piping Temperature Sensors: Furnish with separable brass well.

B. Differential Pressure Switches:
1. Furnish as specified in sequences of operation for status purposes in air and water applications.
2. Fully adjustable differential pressure settings.
3. UL Listed, SPDT snap-acting, pilot duty rated (125 VA minimum).
4. NEMA 250 Type 1 enclosure.
5. Scale range and differential suitable for intended application.

C. Static Pressure Sensor:
1. Non-directional sensor with suitable range for expected input, and temperature compensated.
2. Accuracy: plus or minus 1 percent of full scale with repeatability of 0.5 percent.
3. Output: 4 to 20 mA, 0-5 vDC, 0-10 vDC.
4. Building Static Pressure Range: minus 0.1 to 0.1 inches water column, minus 0.25 to 0.25 inches water column, minus 0.5 to 0.5 inches water column, minus 1.0 to 1.0 inches water column, jumper selectable.
5. Duct Static Pressure Range: 0 to 1 inches water column, 0 to 2.5 inches water column, 0 to 5 inches water column, 0 to 10 inches water column, jumper adjustable.

D. Static Pressure Sensors:
1. Differential pressure type.
2. Sensor range closely matched to system static pressure, minus 0.5 to 0.5 inches water column, minus 1 to 1 inches water column or 0 to 2.5 inches water column.
3. Accuracy: Plus or minus 5 percent of sensing range.

E. Carbon Dioxide Sensors:
1. Sensors designed for indoor carbon dioxide levels in accordance with ASHRAE Standard 62.
2. 4 to 20 ma. linear output over range of 0 to 2000 ppm of carbon dioxide for interface to DDC control system.
3. For duct mounted sensors furnish airtight enclosure complete with sampling tube.

F. Air Flow Switches:
1. Paddle or differential pressure type, as indicated in sequences of operation.
2. UL Listed, SPDT snap-acting with pilot duty rating (125 VA minimum).
3. Appropriate scale range and differential adjustment.
4. Adjustable sensitivity.
5. NEMA 250 Type 1 enclosure.

G. Water Flow Switches:
1. Paddle type with stainless steel or bronze paddle.
2. UL Listed, SPDT snap-acting with pilot duty rating (125 VA minimum).
3. Appropriate scale range and differential adjustment.
4. Adjustable sensitivity.
5. NEMA 250 Type 1 enclosure.
6. Furnish vapor proof type for chilled water applications.

H. Carbon Monoxide Detectors: Single or multi-channel, dual-level detectors, using solid-state sensors with 3 year minimum life, maximum 15 minute sensor replacement, suitable over a temperature range of 23 to 130 degrees F, calibrated for 50 and 100 ppm, with maximum 120 second response time to 100 ppm carbon monoxide.

I. Carbon Dioxide Sensor and Transmitter: Single detectors, using solid-state infrared sensors, suitable over a temperature range of 23 to 130 degrees F, calibrated for 0 to 2 percent, with continuous or averaged reading, 4 to 20 mA output, and wall mounted.

J. Oxygen Sensor and Transmitter: Single detectors, using solid-state zircon cell sensing, suitable over temperature range of minus 32 to 1100 degrees F, calibrated for 0 to 5 percent, with continuous or averaged reading, 4 to 20 mA output, wall mounted.

K. Refrigerant Detectors: Dual-level detectors, using solid-state sensors, with alarm preset for 300 ppm, alarm indicator light, alarm silence light and button, alarm test light and button, and trouble light. Provide auxiliary relay preset for 150 ppm.

L. Occupancy Sensor: Passive infrared, with time delay, daylight sensor lockout, sensitivity control, and 180 degree field of view with vertical sensing adjustment, for flush mounting.

2.10 DUCT-MOUNTED SMOKE DETECTOR

A. Product Description: NFPA 72, photoelectric type with the following features:
1. Auxiliary SPDT relay contact.
2. Key-operated normal-reset-test switch.
3. Duct sampling tubes extending width of duct.
4. Visual indication of detector actuation.
5. Duct-mounted housing.

B. Furnish four-wire detector with separate power supply and signal circuits.

2.11 DIFFERENTIAL PRESSURE MONITOR

A. Through-the-wall measurement for differential pressure.

B. Digital Display:
1. Differential pressure in inches or Pascal.
2. State of pressure mode.
3. High pressure alarm.
4. Low pressure alarm.
5. General failure.
6. Status of door switch.

7. Anteroom status.

C. Keyed switch to change mode from positive to negative to neutral.

D. LED indicator for normal and alarm status.

E. Audible horn indicating alarm condition with silencing button.

F. Communications port.

G. One remote pressure transmitter.

H. Auxiliary alarm relay output.

I. Door switch contact.

J. Calibration tool.

PART 3 EXECUTION

3.01 EXAMINATION

A. Verify pneumatic tubing is clear of water, oil or other contaminants and compressed air supply has filter and dryer operating before installing control devices or actuators.

B. Verify air handling units and ductwork installation are complete and air filters are in place before installing sensors in air streams.

C. Verify location of thermostats and other exposed control sensors with Drawings before installation.

D. Verify building systems to be controlled are ready to operate.

3.02 INSTALLATION

A. Install sleeves through concrete surfaces in minimum one inch sleeves, extended 6 inches above floors and one inch below bottom surface of slabs.

B. Install thermostats, and other exposed control sensors after locations are coordinated with other Work.

C. Install thermostats, and other exposed control sensors at elevations compliant with barrier free requirements.

D. Install freeze protection thermostats using flanges and element holders.

E. Install outdoor reset thermostats and outdoor sensors indoors, with sensing elements outdoors with sun shield.

F. Provide separable sockets for liquids and flanges for air bulb elements.

G. Install control panels adjacent to associated equipment on vibration free walls or freestanding supports. Use one cabinet for more than one system in same equipment room. Install engraved plastic nameplates for instruments and controls inside cabinet and engraved plastic nameplates on cabinet face. Label with appropriate equipment or system designation.

H. Install "hand/off/auto" selector switches to override automatic interlock controls when switch is in "hand" position.

3.03 FIELD QUALITY CONTROL

A. After completion of installation, test and adjust control equipment. Submit data showing set points and final adjustments of controls.

B. Test pneumatic systems to system pressure maximum of 30 psig. Check calibration of instruments. Recalibrate instruments out of calibration. Replace defective instruments.

3.04 DEMONSTRATION AND TRAINING

A. Demonstrate complete operation of systems, including sequence of operation prior to Date of Substantial Completion.

B. Demonstrate complete and operating system to Owner.

END OF SECTION

SECTION 23 0□23
DIRECT - DIGITAL CONTROL SYSTEM

PART 1 GENERAL

1.01 SUMMARY

A. This building has an existing Delta Direct Digital Control system controlling the operation of the existing HVAC equipment and systems. The central control panel for this system is located in the existing boiler room.

B. It is intended that this existing system be expanded to provide proper control of the additional HVAC equipment and systems that are being added under the scope of this project.

C. It is also intended that, where modifications to existing equipment and systems are made, this existing control system be adjusted and expanded as necessary to accommodate the revised configuration of the HVAC equipment and systems.

1.02 SUBMITTALS

A. Submit in accordance with the requirements of Division 1, Section 23 00 50, and this section.

B. Shop Drawings: Indicate the following:
1. Trunk cable schematic showing programmable control-unit locations and trunk data conductors.
2. Connected data points, including connected control unit and input device.
3. System graphics showing monitored systems, data (connected and calculated) point addresses, and operator notations.
4. System configuration with peripheral devices, batteries, power supplies, diagrams, modems, and interconnections.
5. Description and sequence of operation for operating, user, and application software.
6. Use terminology in submittals conforming to ASME MC85.1.
7. Coordinate submittals with information requested in Section 23 09 93.

C. Product Data: Submit data for each system component and software module.

D. Manufacturer's Installation Instructions: Submit installation instruction for each control system component.

E. Project Record Documents: Record actual locations of control components, including control units, thermostats, and sensors.
1. Revise original shop drawings to reflect actual installation and operating sequences.

F. Operation and Maintenance Data:
   1. Submit interconnection wiring diagrams complete field installed systems with identified and numbered, system components and devices.
   2. Submit keyboard illustrations and step-by-step procedures indexed for each operator function.
   3. Submit inspection period, cleaning methods, cleaning materials recommended, and calibration tolerances.

1.03 QUALIFICATIONS

A. Manufacturer: Company specializing in manufacturing products specified in this section with minimum three years experience, and with service capabilities within 200 miles of Project.

1.04 FIELD MEASUREMENTS

A. Verify field measurements prior to fabrication.

PART 2 PRODUCTS

2.01 GENERAL REQUIREMENTS

A. All new products shall conform to the following requirements unless said requirements are incompatible with the existing Delta Control System.

2.02 CONTROL UNITS

A. Units: Modular in design and consisting of processor board with programmable RAM memory, local operator access and display panel, and integral interface equipment.

B. Battery Backup: For minimum of 48 hours for complete system including RAM without interruption, with automatic battery charger.

C. Control Units Functions:
   1. Monitor or control each input/output point.
   2. Completely independent with hardware clock/calendar and software to maintain control independently.
   3. Acquire, process, and transfer information to operator station or other control units on network.
   4. Accept, process, and execute commands from other control unit's or devices or operator stations.
   5. Access both data base and control functions simultaneously.
   6. Record, evaluate, and report changes of state or value occurring among associated points. Continue to perform associated control functions regardless of status of network.
   7. Perform in stand-alone mode:
      a. Start/stop.
      b. Duty cycling.
      c. Automatic Temperature Control.

d. Demand control via a sliding window, predictive algorithm.
e. Event initiated control.
f. Calculated point.
g. Scanning and alarm processing.
h. Full direct digital control.
i. Trend logging.
j. Global communications.
k. Maintenance scheduling.

D. Global Communications:
1. Broadcast point data onto network, making information available to other system controls units.
2. Transmit input/output points onto network for use by other control units and use data from other control units.

E. Input/output Capability:
1. Discrete/digital input (contact status).
2. Discrete/digital output.
3. Analog input.
4. Analog output.
5. Pulse input (5 pulses/second).
6. Pulse output (0-655 seconds in duration with 0.01-second resolution).

F. Monitor, control, or address data points. Include analog inputs, analog outputs, pulse inputs, pulse outputs and discrete inputs/outputs. Furnish control units with minimum 30 percent spare capacity.

G. Point Scanning: Set scan or execution speed of each point to operator selected time from 1 to 250 seconds.

H. Upload/Download Capability: Download from or upload to operator station. Upload/Download time for entire control unit database maximum 10 seconds on hard-wired LAN or 60 seconds over voice grade phone lines.

I. Test Mode Operation: Place input/output points in test mode to allow testing and developing of control algorithms on line without disrupting field hardware and controlled environment. In test mode:
1. Inhibit scanning and calculation of input points. Issue manual control to input points (set analog or digital input point to operator determined test value) from workstation.
2. Control output points but change only database state or value; leave external field hardware unchanged.
3. Enable control-actions on output points but change only data base state or value.

J. Local display and adjustment panel: Portable control-unit containing digital display, and numerical keyboard. Display and adjust:
   1. Input/output point information and status.
   2. Controller set points.
   3. Controller tuning constants.
   4. Program execution times.
   5. High and low limit values.
   6. Limit differential.
   7. Set/display date and time.
   8. Control outputs connected to the network.
   9. Automatic control outputs.
   10. Perform control unit diagnostic testing.

K. Points in "Test" mode.

2.03 LOCAL AREA NETWORKS (LAN):

A. Furnish communication between control units over local area network (LAN).

B. LAN Capacity: Not less than 60 stations or nodes.

C. Break in Communication Path: Alarm and automatically initiate LAN reconfiguration.

D. LAN Data Speed: Minimum 19.2 Kb.

E. Communication Techniques: Allow interface into network by multiple operation stations and by auto-answer/auto-dial modems. Support communication over telephone lines utilizing modems.

F. Transmission Median: Fiber optic or single pair of solid 24 gauge twisted, shielded copper cable.

G. Network Support: Time for global point to be received by any station, less than 3 seconds. Furnish automatic reconfiguration when station is added or lost. In event transmission cable is cut, reconfigure two sections with no disruption to system's operation, without operator intervention.

2.04 OPERATING SYSTEM SOFTWARE

A. All necessary operating, maintenance and service software shall become the property of the Owner.

B. Input/output Capability From Operator Station:
   1. Request display of current values or status in tabular or graphic format.
   2. Command selected equipment to specified state.
   3. Initiate logs and reports.
   4. Change analog limits.
   5. Add, delete, or change points within each control unit or application routine.
   6. Change point input/output descriptors, status, alarm descriptors, and unit descriptors.

7. Add new control units to system.
8. Modify and set up maintenance scheduling parameters.
9. Develop, modify, delete or display full range of color graphic displays.
10. Automatically archive select data even when running third party software.
11. Capability to sort and extract data from archived files and to generate custom reports.
12. Support two printer operations.
13. Alarm printer: Print alarms, operator acknowledgments, action messages, system alarms, operator sign-on and sign-off.
14. Data printer: Print reports, page prints, and data base prints.
15. Select daily, weekly or monthly as scheduled frequency to synchronize time and date in digital control units. Accommodate daylight savings time adjustments.
16. Print selected control unit database.

C. Operator System Access: Via software password with minimum 30 access levels at work station and minimum 3 access levels at each control unit.

D. Data Base Creation and Support: Use standard procedures for changes. Control unit automatically checks workstation data base files upon connection and verify data base match. Include the following minimum capabilities:
1. Add and delete points.
2. Modify point parameters.
3. Change, add, or delete English language descriptors.
4. Add, modify, or delete alarm limits.
5. Add, modify, or delete points in start/stop programs, trend logs, and other items.
6. Create custom relationship between points.
7. Create or modify DDC loops and parameters.
8. Create or modify override parameters.
9. Add, modify, and delete applications programs.
10. Add, delete, develop, or modify dynamic color graphic displays.

E. Dynamic Color Graphic Displays:
1. Utilizes custom symbols or system supported library of symbols.
2. Sixteen (16) colors.
3. Sixty (60) outputs of real-time live dynamic data for each graphic.
4. Dynamic graphic data.
5. 1,000 separate graphic pages.
6. Modify graphic screen refresh rate between 1 and 60 seconds.

F. Operator Station:
1. Accept data from LAN as needed without scanning entire network for updated point data.
2. Interrogate LAN for updated point data when requested.
3. Allow operator command of devices.
4. Allow operator to place specific control units in or out of service.
5. Allow parameter editing of control units.
6. Store duplicate data base for every control unit and allow down loading while system is on line.
7. Control or modify specific programs.
8. Develop, store and modify dynamic color graphics.
9. Data archiving of assigned points and support overlay graphing of this data using up to four (4) variables.

G. Alarm Processing:
1. Off normal condition: Cause alarm and appropriate message, including time, system, point descriptor, and alarm condition. Select alarm state or value and alarms causing automatic dial-out.
2. Critical alarm or change-of-state: Display message, stored on disk for review and sort, or print.
3. Print on line changeable message, up to 60 characters in length, for each alarm point specified.
4. Display alarm reports on video. Display multiple alarms in order of occurrence.
5. Define time delay for equipment start-up or shutdown.
6. Allow unique routing of specific alarms.
7. Operator specifies when alarm requires acknowledgment.
8. Continue to indicate unacknowledged alarms after return to normal.
9. Alarm notification:
10. Print automatically.
11. Display indicating alarm condition.
12. Selectable audible alarm indication.

H. Event Processing: Automatically initiate commands, user defined messages, take specific control actions or change control strategy and application programs resulting from event condition. Event condition may be value crossing operator defined limit, change of state, specified state, or alarm occurrence or return to normal.

I. Automatic Restart: Automatically start field equipment on restoration of power. Furnish time delay between individual equipment restart and time of day start/stop.

J. Messages:
1. Automatically display or print user-defined message subsequent to occurrence of selected events.
2. Compose, change, or delete message.
3. Display or log message at any time.
4. Assign any message to event.

K. Reports:
1. Manually requested with time and date.
2. Long term data archiving to hard disk.
3. Automatic directives to download to transportable media including floppy diskettes for storage.
4. Data selection methods to include data base search and manipulation.
5. Data extraction with mathematical manipulation.
6. Data reports to allow development of XY curve plotting, tabular reports (both statistical and summary), and multi-point timed based plots with not less than four (4) variables displayed.
7. Generating reports either normally at operator direction, or automatically under workstation direction.
8. Either manually display or print reports. Automatically print reports on daily, weekly, monthly, yearly or scheduled basis.
9. Include capability for statistical data manipulation and extraction.
10. Capability to generate four types of reports: Statistical detail reports, summary reports, trend graphic plots, x-y graphic plots.

L. Parameter Save/Restore: Store most current operating system, parameter changes, and modifications on disk or diskette.

M. Data Collection:
1. Automatically collect and store in disk files.
2. Daily electrical energy consumption, peak demand, and time of peak demand for up to electrical meters over 2-year period.
3. Daily consumption for up to 30 meters over a 2 year period.
4. Daily billable electrical energy consumption and time for up to 1024 zones over a 10 year period.
5. Archiving of stored data for use with system supplied custom reports.

N. Graphic Display: Support graphic development on work station with software features:
1. Page linking.
2. Generate, store, and retrieve library symbols.
3. Single or double height characters.
4. Sixty (60) dynamic points of data for each graphic page.
5. Pixel level resolution.
6. Animated graphics for discrete points.
7. Analog bar graphs.
8. Display real time value of each input or output line diagram fashion.

O. Maintenance Management:
1. Run time monitoring, for each point.
2. Maintenance scheduling targets with automatic annunciation, scheduling and shutdown.
3. Equipment safety targets.
4. Display of maintenance material and estimated labor.
5. Target point reset, for each point.

P. Advisories:
1. Summary containing status of points in locked out condition.
2. Continuous operational or not operational report of interrogation of system hardware and programmable control units for failure.
3. Report of power failure detection, time and date.
4. Report of communication failure with operator device, field interface unit, point and programmable control unit.

2.05 LOAD CONTROL PROGRAMS

A. General: Support inch-pounds and S.I. metric units of measurement.

B. Demand Limiting:
1. Monitor total power consumption for each power meter and shed associated loads automatically to reduce power consumption to an operator set maximum demand level.
2. Input: Pulse count from incoming power meter connected to pulse accumulator in control unit.
3. Forecast demand (kW): Predicted by sliding window method.
4. Automatically shed loads throughout the demand interval selecting loads with independently adjustable on and off time of between one and 255 minutes.
5. Demand Target: Minimum of 3 for each demand meter; change targets based upon (1) time, (2) status of pre-selected points, or (3) temperature.
6. Load: Assign load shed priority, minimum "ON" time and maximum "OFF" time.
7. Limits: Include control band (upper and lower limits).
8. Output advisory when loads are not available to satisfy required shed quantity, advise shed requirements and requiring operator acknowledgment.

C. Duty Cycling:
1. Periodically stop and start loads, based on space temperature, and according to various On/Off patterns.
2. Modify off portion of cycle based on operator specified comfort parameters. Maintain total cycle time by increasing on portion of cycle by equal quantity off portion is reduced.
3. Set and modify following parameters for each individual load.
   a. Minimum and maximum off time.
   b. On/Off time in one-minute increments.
   c. Time period from beginning of interval until cycling of load.
   d. Manually override the DDC program and place a load in an On or Off state.
   e. Cooling Target Temperature and Differential.
   f. Heating Target Temperature and Differential.
   g. Cycle off adjustment.

D. Automatic Time Scheduling:
   1. Self-contained programs for automatic start/stop/scheduling of building loads.
   2. Support up to seven (7) normal day schedules, seven (7) "special day" schedules and two (2) temporary day schedules.
   3. Special day's schedule supporting up to 30 unique date/duration combinations.
   4. Number of loads assigned to time program; with each load having individual time program.
   5. Each load assigned at least 16 control actions for each day with 1 minute resolution.
   6. Furnish the following time schedule operations:
      a. Start.
      b. Optimized Start.
      c. Stop.
      d. Optimized Stop.
      e. Cycle.
      f. Optimized Cycle.
   7. Capable of specifying minimum of 30 holiday periods up to 100 days in length for the year.
   8. Create temporary schedules.
   9. Broadcast temporary "special day" date and duration.

E. Start/Stop Time Optimization:
   1. Perform optimized start/stop as function of outside conditions, inside conditions, or both.
   2. Adaptive and self-tuning, adjusting to changing conditions unattended.
   3. For each point under control, establish and modify:
      a. Occupancy period.
      b. Desired temperature at beginning of occupancy period.
      c. Desired temperature at end of occupancy period.

F. Night Setback/Setup Program: Reduce heating space temperature set point or raise cooling space temperature set-point during unoccupied hours; in conjunction with scheduled start/stop and optimum start/stop programs.

G. Calculated Points: Define calculations and totals computed from monitored points (analog/digital points), constants, or other calculated points.
   1. Employ arithmetic, algebraic, Boolean, and special function operations.
   2. Treat calculated values like any other analog value; use for any function where a "hard wired point" might be used.

H. Event Initiated Programming: Any data point capable of initiating event, causing series of controls in a sequence.
   1. Define time interval between each control action between 0 to 3600 seconds.
   2. Output may be analog value.
   3. Provide for "skip" logic.
   4. Verify completion of one action before proceeding to next action. When not verified, program capable of skipping to next action.

I. Direct Digital Control: Furnish Direct Digital Control software with each control unit so operator is capable of customizing control strategies and sequences of operation by defining appropriate control loop algorithms and choosing optimum loop parameters.
   1. Control loops: Defined using "modules" are analogous to standard control devices.
   2. Output: Paired or individual digital outputs for pulse width modulation, and analog outputs.
   3. Firmware:
      a. PID with analog or pulse-width modulation output.
      b. Floating control with pulse-width modulated outputs.
      c. Two-position control.
      d. Primary and secondary reset schedule selector.
      e. Hi/Low signal selector.
      f. Single pole double-throw relay.
      g. Single pole double throw time delay relay with delay before break, delay before make and interval time capabilities.
   4. Direct Digital Control loop: Downloaded upon creation or on operator request. On sensor failure, program executes user defined failsafe output.
   5. Display: Value or state of each of lines interconnecting DDC modules.

J. Fine Tuning Direct Digital Control PID or floating loops:
   1. Display information:
      a. Control loop being tuned.
      b. Input (process) variable.
      c. Output (control) variable.
      d. Set-point of loop.
      e. Proportional band.
      f. Integral (reset) Interval.
      g. Derivative (rate) Interval.
   2. Display format: Graphic, with automatic scaling; with input and output variable superimposed on graph of "time" versus "variable".

K. Trend logging:
   1. Each control unit capable of storing samples of control unit's data points.
   2. Update file continuously at operator assigned intervals.
   3. Automatically initiate upload requests and then stores data on hard disk.
   4. Time synchronize sampling at operator specified times and intervals with sample resolution of one minute.
   5. Co-ordinate sampling with specified on/off point- state.
   6. Display trend samples on workstation in graphic format. Automatically scale trend graph with minimum 25,000 samples of data in plot of time versus data for AHU and 12,000 for VAV controllers.

2.06 HVAC CONTROL PROGRAMS

A. General:
   1. Support Inch-pounds and S.I. metric units of measurement.
   2. Identify each HVAC Control system.

B. Optimal Run Time:
1. Control start-up and shutdown times of HVAC equipment for both heating and cooling.
2. Base on occupancy schedules, outside air temperature, seasonal requirements, and interior room mass temperature.
3. Start-up systems by using outside air temperature, room mass temperatures, and adaptive model prediction for how long building takes to warm up or cool down under different conditions.
4. Use outside air temperature to determine early shut down with ventilation override.
5. Analyze multiple building mass sensors to determine seasonal mode and worse case condition for each day.
6. Operator commands:
   a. Define term schedule.
   b. Add/delete fan status point.
   c. Add/delete outside air temperature point.
   d. Add/delete mass temperature point.
   e. Define heating/cooling parameters.
   f. Define mass sensor heating/cooling parameters.
   g. Lock/unlock program.
   h. Request optimal run-time control summary.
   i. Request optimal run-time mass temperature summary.
   j. Request HVAC point summary.
   k. Request HVAC saving profile summary.
7. Control Summary:
   a. HVAC Control system begin/end status.
   b. Optimal run time lock/unlock control status.
   c. Heating/cooling mode status.
   d. Optimal run time schedule.
   e. Start/Stop times.
   f. Selected mass temperature point ID.
   g. Optimal run-time system normal start-times.
   h. Occupancy and vacancy times.
   i. Optimal run time system heating/cooling mode parameters.
8. Mass temperature summary:
   a. Mass temperature point type and ID.
   b. Desired and current mass temperature values.
   c. Calculated warm-up/cool-down time for each mass temperature.
   d. Heating/cooling season limits.
   e. Break point temperature for cooling mode analysis.
9. HVAC point summary:
   a. Control system identifier and status.
   b. Point ID and status.
   c. Outside air temperature point ID and status.
   d. Mass temperature point ID and status.
   e. Calculated optimal start and stop times.
   f. Period start.

C. Enthalpy Switchover:
1. Calculate outside and return air enthalpy using measured temperature and relative humidity; determine energy expended and control outside and return air dampers.
2. Operator commands:
   a. Add/delete fan status point.
   b. Add/delete outside air temperature point.
   c. Add/delete discharge controller point.
   d. Define discharge controller parameters.
   e. Add/delete return air temperature point.
   f. Add/delete outside air dew point/humidity point.
   g. Add/delete return air dew point/humidity point.
   h. Add/delete damper switch.
   i. Add/delete minimum outside air.
   j. Add/delete atmospheric pressure.
   k. Add/delete heating override switch.
   l. Add/delete evaporative cooling switch.
   m. Add/delete air flow rate.
   n. Define enthalpy dead band.
   o. Lock/unlock program.
   p. Request control summary.
   q. Request HVAC point summary.
3. Control summary:
   a. HVAC control system begin/end status.
   b. Enthalpy switchover optimal system status.
   c. Optimal return time system status.
   d. Current outside air enthalpy.
   e. Calculated mixed air enthalpy.
   f. Calculated cooling cool enthalpy using outside air.
   g. Calculated cooling cool enthalpy using mixed air.
   h. Calculated enthalpy difference.
   i. Enthalpy switchover dead band.
   j. Status of damper mode switch.

2.07 PROGRAMMING APPLICATION FEATURES

A. Trend Point:
1. Sample up to 10 points, real or computed, with each point capable of collecting 100 samples at intervals specified in minutes, hours, days, or month.
2. Output trend logs as line-graphs or bar graphs. Output graphic on terminal, with each point for line and bar graphs designated with a unique pattern, vertical scale either actual values or percent of range, and horizontal scale time base. Print trend logs up to 12 columns of one point/column.

B. Alarm Messages:
1. Allow definition of minimum of 100 messages, each having minimum length of 1,000 characters for each individual message.
2. Assign alarm messages to system messages including point's alarm condition, point's off-normal condition, totaled point's warning limit, hardware elements advisories.
3. Output assigned alarm with "message requiring acknowledgment".
4. Operator commands include define, modify, or delete; output summary listing current alarms and assignments; output summary defining assigned points.

C. Weekly Scheduling:
1. Automatically initiate equipment or system commands, based on selected time schedule for points specified.
2. Program times for each day of week, for each point, with one minute resolution.
3. Automatically generate alarm output for points not responding to command.
4. Allow for holidays, minimum of 366 consecutive holidays.
5. Operator commands:
   a. System logs and summaries.
   b. Start of stop point.
   c. Lock or unlock control or alarm input.
   d. Add, delete, or modify analog limits and differentials.
   e. Adjust point operation position.
   f. Change point operational mode.
   g. Open or close point.
   h. Enable/disable, lock/unlock, or execute interlock sequence or computation profile.
   i. Begin or end point totals.
   j. Modify total values and limits.
   k. Access or secure point.
   l. Begin or end HVAC or load control system.
   m. Modify load parameter.
   n. Modify demand limiting and duty cycle targets.
6. Output summary: Listing of programmed function points, associated program times, and respective day of week programmed points by software groups or time of day.

D. Interlocking:
1. Permit events to occur, based on changing condition of one or more associated master points.
2. Binary contact, high/low limit of analog point or computed point capable of being used as master. Master capable of monitoring or commanding multiple slaves.
3. Operator commands:
   a. Define single master/multiple master interlock process.
   b. Define logic interlock process.
   c. Lock/unlock program.
   d. Enable/disable interlock process.
   e. Execute terminate interlock process.
   f. Request interlock type summary.

PART 3 EXECUTION

3.01 EXAMINATION

A. Verify conditioned power supply is available to control units and to operator workstation.

B. Verify field end devices, wiring, and pneumatic tubing is installed prior to installation proceeding.

3.02 INSTALLATION

A. Install control units and other hardware in position on permanent walls where not subject to excessive vibration.

B. Install software in control units and in operator workstation. Implement features of programs to specified requirements and appropriate to sequence of operation.

C. Install with 120 volts alternating current, 15 amp dedicated emergency power circuit to each programmable control unit.

D. Install conduit and electrical wiring in accordance with the requirements of the Electrical Specifications. The cost of this work is to be included in the Temperature Control Contractor's price.

3.03 MANUFACTURER'S FIELD SERVICES

A. Start and commission systems. Allow adequate time for start-up and commissioning prior to placing control systems in permanent operation.

B. Furnish service technician employed by system installer to instruct Owner's representative in operation of systems plant and equipment for a total of 24 hours of on-site training. Schedule of training to be established with the Owner and shall include at least five (5) different sessions.

END OF SECTION

SECTION 23 0□ □3

SEQUENCE OF OPERATIONS FOR HVAC CONTROLS

PART 1 GENERAL

1.01 SUMMARY

A. Section includes sequence of operation for:
1. Cabinet Heaters.
2. Roof Top Units.
3. Exhaust fans.
4. Heating Coils.
5. Finned Tube.
6. Split Systems.
7. Energy Recovery Unit.
8. VAV Systems.

1.02 SUBMITTALS

A. Submit in accordance with the requirements of Division 1, Section 23 00 50, and this section.

B. Shop Drawings: Indicate mechanical system controlled and control system components.
1. Label with settings, adjustable range of control and limits. Submit written description of control sequence.
2. Submit flow diagrams for each control system, graphically depicting control logic.
3. Submit draft copies of graphic displays indicating mechanical system components, control system components, and controlled function status and value.

C. Project Record Documents: Record actual locations of components and set points of controls, including changes to sequences made after submission of shop drawings.

PART 2 PRODUCTS

Not Used.

PART 3 EXECUTION

3.01 CABINET HEATERS

A. Single temperature thermostat set at 68 degrees F (adjustable) maintains constant space temperature by cycling unit fan motor and opening control valve.

3.02 ROOF TOP UNITS

A. General: Roof top units are generally cooling only units with an associated duct mounted heating coil. Unit and related coils shall be controlled as a single entity. in general, the unit and coil shall be operated to maintain the desired temperature set point of the associated room thermostat, or air temperature sensor.

B. Time Schedule: Start and stop unit. Determine fan status through auxiliary contactors in motor starter, or other approved method. When fan fails to start as commanded, signal alarm.

C. Safety Devices:
1. Freeze Protection: Stop fans and close outside air dampers when temperature ahead of duct mounted heating coil is below 37 degrees F; signal alarm.
2. High Temperature Protection: Stop fans and close outside dampers when temperature in return air is above 300 degrees F; signal alarm.
3. Smoke Detector, required where unit air flow is above code requirements: Stop fans, close outside dampers, and close smoke dampers when smoke is detected; signal alarm.

D. Outside, Return, and Relief Dampers:
1. When supply fan is not running, outside and relief dampers are closed and return damper is open.
2. When supply fan is running, dampers are controlled and operate with outside and relief dampers opening, and return damper closing.
3. For cooling determine modulating damper positions by enthalpy control. Provide minimum required outside air volumes in all operating conditions.
4. For heating, provide minimum required outside air volumes in all operating conditions.

E. Secure Areas: Units serving the lock-up areas shall be provided with duct mounted temperature sensors to properly control the space temperature.

3.03 EXHAUST FANS

A. Reverse Acting Thermostat Control:
   1. On room temperature above 85 degrees F, open intake dampers and start exhaust fans.
   2. On room temperatures above 95 degrees F, signal alarm.

B. Occupancy Sensor: Exhaust fans serving Toilet rooms, Janitor Closets, etc., shall be controlled via the occupancy sensors controlling the lighting in these rooms. Where a single fan serves more than one such room, the fan shall run anytime the lights are on in either room.

3.04 HEATING COILS

A. Room thermostat maintains constant space temperature by modulating the heating coil control. Provide night temperature set-back capability. Integrate with associated roof top unit.

3.05 FINNED TUBE

A. Room thermostat maintains constant space temperature by modulating radiation control. Provide night set-back capability.

3.06 SPLIT SYSTEMS

A. Split system fan coil and condensing units shall operate to maintain the desired space temperature in response to the temperature sensing device within the room. In each case, these units are provided with low ambient operating controls to insure that cooling can be provided to the interior space at any outside air temperature condition.

3.07 ENERGY RECOVERY UNIT

A. The energy recovery unit serving the Sherriff's Locker Room area consists of a supply fan, exhaust fan, energy recovery wheel, D/X cooling coil and condensing unit, associated duct mounted heating coils, filters, dampers, etc.

B. The unit fans shall run continuously, provide an alarm when either fan fails.

C. Temperature sensors shall be provided in the exhaust air duct from each of the four (4) pod areas to determine the supply air temperature needed to satisfy the space conditions.
   1. If any of the four (4) sensors indicate a need for cooling, the first stage of the condensing unit shall be energized to compensate. If the call for cooling increases, the second stage of the condensing unit shall be started.
   2. Where any of the four (4) sensors indicate a need for heating, the associated heating coil control valve shall modulate toward the open position to compensate.
   3. Provide smoke detectors in the supply and exhaust air streams. Shut unit down and close all dampers if smoke is detected.

3.08 VAV SYSTEMS

A. Modulate the position of the VAV box damper and finned tube heating in sequence to maintain the thermostat set point.

B. Provide duct pressure sensors and control the main bypass damper to maintain the required air flow through the unit and to the occupied spaces.

END OF SECTION

SECTION 23 21 13
HYDRONIC PIPING

PART 1 GENERAL

1.01 SUMMARY

A. Section Includes:
1. Heating water piping, above ground.
2. Equipment drains and over flows.
3. Unions and flanges.
4. Pipe hangers and supports.
5. Valves.

1.02 SUBMITTALS

A. Submit in accordance with the requirements of Division 1, Section 23 00 50, and this section.

B. Product Data:
1. Piping: Submit data on pipe materials, fittings, and accessories. Submit manufacturers catalog information.
2. Valves: Submit manufacturers catalog information with valve data and ratings for each service.
3. Hangers and Supports: Submit manufacturers catalog information including load capacity.

C. Design Data: Indicate pipe size. Indicate load carrying capacity of trapeze, multiple pipe, and riser support hangers.

D. Test Reports: Indicate results of piping system pressure test.

E. Manufacturer's Installation Instructions: Submit hanging and support methods, joining procedures and isolation.

F. Project Record Documents: Record actual locations of piping, valves, equipment and accessories.

G. Operation and Maintenance Data: Submit instructions for installation and changing components, spare parts lists, exploded assembly views.

1.03 QUALITY ASSURANCE

A. Perform Work in accordance with ASME B31.1 standard for installation of piping systems and ASME Section IX for welding materials and procedures.

1.04 DELIVERY, STORAGE, AND HANDLING

A. Deliver, store, and handle in accordance with the requirements of Division 1, Section 23 00 50, and this Section.

B. Accept valves on site in shipping containers with labeling in place. Inspect for damage.

C. Provide temporary end caps and closures on piping and fittings. Maintain in place until installation.

D. Protect piping systems from entry of foreign materials by temporary covers, completing sections of the Work, and isolating parts of completed system.

1.05 FIELD MEASUREMENTS

A. Verify field measurements prior to fabrication.

PART 2 PRODUCTS

2.01 HEATING WATER PIPING, ABOVE GROUND

A. Steel Pipe: ASTM A53/A53M, Schedule 40, black.
   1. Fittings: ASME B16.3, malleable iron or ASTM A234/A234M, forged steel welding type.
   2. Joints: Threaded for pipe 2 inches and smaller; welded for pipe 2-1/2 inches and larger.

B. Copper Tubing: ASTM B88, Type L, drawn.
   1. Fittings: ASME B16.18, cast brass, or ASME B16.22 solder wrought copper.
   2. Tee Connections: Mechanically extracted collars with notched and dimpled branch tube.
   3. Joints: [Solder, lead free, ASTM B32, 95-5 tin-antimony, or tin and silver, with melting range 430 to 535 degrees F.

2.02 EQUIPMENT DRAINS AND OVERFLOWS

A. Copper Tubing: ASTM B88, Type DWV, drawn.
   1. Fittings: ASME B16.18, cast brass, or ASME B16.22 solder wrought copper.
   2. Joints: Solder, lead free, ASTM B32, 95-5 tin-antimony, or tin and silver, with melting range 430 to 535 degrees F.

2.03 UNIONS AND FLANGES

A. Unions for Pipe 2 inches and Smaller:
   1. Ferrous Piping: Class 150, malleable iron, threaded.
   2. Copper Piping: Class 150, bronze unions with soldered joints.
   3. Dielectric Connections: Union with galvanized or plated steel threaded end, copper solder end, water impervious isolation barrier.
   4. PVC Piping: PVC.

B. Flanges for Pipe 2-1/2 inches and Larger:
   1. Ferrous Piping: Class 150, forged steel, slip-on flanges.
   2. Copper Piping: Class 150, slip-on bronze flanges.
   3. PVC Piping: PVC flanges.
   4. Gaskets: 1/16 inch thick preformed neoprene gaskets.

C. PVC Pipe Materials: For connections to equipment and valves with threaded connections, furnish solvent-weld socket to screwed joint adapters and unions, or ASTM D2464, Schedule 80, threaded, PVC pipe.

2.04 VALVES

A. GATE VALVES
   1. 2 inches and Smaller: MSS SP 80, Class 125, bronze body, bronze trim, threaded bonnet, non-rising stem, hand-wheel, inside screw, solid wedge disc, alloy seat rings, solder or threaded ends.
   2. 2-1/2 inches and Larger: MSS SP 70, Class 125, cast iron body, bronze trim, bolted bonnet, rising stem, hand-wheel, outside screw and yoke, solid wedge disc with bronze seat rings, flanged ends. Furnish chain-wheel operators for valves 6 inches and larger mounted over 8 feet above floor.

B. GLOBE VALVES
   1. 2 inches and Smaller: MSS SP 80, Class 125, bronze body, bronze trim, threaded bonnet, hand wheel, Teflon composition disc, solder or threaded ends.
   2. 2-1/2 inches and Larger: MSS SP 85, Class 125, cast iron body, bronze trim, hand wheel, outside screw and yoke, flanged ends. Furnish chain-wheel operators for valves 6 inches and larger mounted over 8 feet above floor.

C. BALL VALVES
   1. 2-1/2 inches and Smaller: MSS SP 110, 400 psi WOG, two piece bronze body, chrome plated brass ball, full port, Teflon seats, blow-out proof stem, solder or threaded ends with union, lever handle.

D. CHECK VALVES
   1. 2 inches and Smaller: MSS SP 80, Class 150, bronze body and cap, bronze seat, Teflon disc, solder or threaded ends.
   2. 2-1/2 inches and Larger: MSS SP 71, Class 125, cast iron body, bolted cap, bronze or cast iron disc, renewable disc seal and seat, flanged ends.

2.05 PIPE HANGERS AND SUPPORTS

A. Conform to ASME B31.1, and MSS SP 89.

B. Hangers for Pipe Sizes 1/2 to 1-1/2 inch: Malleable iron, adjustable swivel, split ring.

C. Hangers for Cold Pipe Sizes 2-1/2 inches and Larger: Carbon steel, adjustable, clevis.

D. Hangers for Hot Pipe Sizes 2 to 4 inches: Carbon steel, adjustable, clevis.

E. Multiple or Trapeze Hangers: Steel channels with welded spacers and hanger rods.

F. Vertical Support: Steel riser clamp.

G. Copper Pipe Support: Carbon steel rings, adjustable, copper plated.

H. Hanger Rods: Mild steel threaded both ends, threaded one end, or continuous threaded.

I. Inserts: Malleable iron case of galvanized steel shell and expander plug for threaded connection with lateral adjustment, top slot for reinforcing rods, lugs for attaching to forms; size inserts to suit threaded hanger rods.

PART 3 EXECUTION

3.01 PREPARATION

A. Ream pipe and tube ends. Remove burrs. Bevel plain end ferrous pipe.

B. Remove scale and dirt on inside and outside before assembly.

C. Prepare piping connections to equipment with flanges or unions.

D. Keep open ends of pipe free from scale and dirt. Protect open ends with temporary plugs or caps.

E. After completion, fill, clean, and treat systems.

3.02 INSTALLATION - PIPE HANGERS AND SUPPORTS

A. Install in accordance with ASME B31.9 and MSS SP 89.

B. Support horizontal piping as scheduled.

C. Install hangers to provide minimum 1/2 inch space between finished covering and adjacent work.

D. Place hangers within 12 inches of each horizontal elbow.

E. Use hangers with 1-1/2 inch minimum vertical adjustment. Design hangers for pipe movement without disengagement of supported pipe.

F. Support vertical piping at every floor. Support riser piping independently of connected horizontal piping.

G. Where installing several pipes in parallel and at same elevation, provide multiple pipe hangers or trapeze hangers.

H. Provide copper plated hangers and supports for copper piping where copper piping is in direct contact with hanger.

I. Prime coat exposed steel hangers and supports. Hangers and supports located in crawl spaces, pipe shafts, and suspended ceiling spaces are not considered exposed.

J. Provide clearance in hangers and from structure and other equipment for installation of insulation and access to valves and fittings.

3.03 INSTALLATION - ABOVE GROUND PIPING SYSTEMS

A. Install heating water piping in accordance with ASME B31.1

B. Route piping parallel to building structure and maintain gradient.

C. Install piping to conserve building space, and not interfere with use of space.

D. Group piping whenever practical at common elevations.

E. Sleeve pipe passing through partitions, walls and floors. Refer to Section 23 05 29.

F. Install fire-stopping at penetrations through fire rated assemblies to maintain the rating of the assembly.

G. Install piping to allow for expansion and contraction without stressing pipe, joints, or connected equipment.

H. Provide access panels of appropriate size and fire rating where valves and fittings are installed in “inaccessible” locations (behind walls, above “hard” ceilings, etc.).

I. Slope hydronic piping and arrange systems to drain at low points. Use eccentric reducers to eliminate potential water pockets along the bottom of the piping.

J. Where pipe support members are welded to structural building framing, scrape, brush clean, and apply one coat of zinc rich primer to welds.

K. Install valves with stems in, or above, an horizontal plane passing through the center of the valve.

3.04 FIELD QUALITY CONTROL

A. Test heating water piping system in accordance with ASME B31.9.

3.05 SCHEDULES

A. Copper and Steel Pipe Hanger Spacing:

PIPE SIZE Inches	COPPER TUBING MAXIMUM HANGER SPACING Feet	STEEL PIPE MAXIMUM HANGER SPACING Feet	COPPER TUBING HANGER ROD DIAMETER Inches	STEEL PIPE HANGER ROD DIAMETER Inches
1/2	5	7	3/8	3/8
3/4	5	7	3/8	3/8
1	6	7	3/8	3/8
1-1/4	7	7	3/8	3/8
1-1/2	8	9	3/8	3/8
2	8	10	3/8	3/8
2-1/2 (Note 1)	9	11	1/2	1/2
3	10	12	1/2	1/2
4	12	14	1/2	5/8

END OF SECTION

SECTION 23 21 16
HYDRONIC PIPING SPECIALTIES

PART 1 GENERAL

1.01 SUMMARY

A. Section Includes:
1. Pressure gages.
2. Pressure gage taps.
3. Thermometers.
4. Thermometer supports.
5. Test plugs.
6. Air vents.
7. Strainers.
8. Relief valves.

1.02 SUBMITTALS

A. Submit in accordance with the requirements of Division 1, Section 23 00 50, and this section.

B. Product Data: Submit for manufactured products and assemblies used in this Project.
1. Manufacturer's data and list indicating use, operating range, total range, accuracy, and location for manufactured components.
2. Submit product description, model, dimensions, component sizes, rough-in requirements, service sizes, and finishes.
3. Submit schedule indicating manufacturer, model number, size, location, rated capacity, load served, and features for each piping specialty.
4. Submit electrical characteristics and connection requirements.

C. Manufacturer's Installation Instructions: Submit hanging and support methods, joining procedures, application, selection, and hookup configuration. Include pipe and accessory elevations.

D. Project Record Documents: Record actual locations of accessories, components and instrumentation.

E. Operation and Maintenance Data: Submit instructions for calibrating instruments, installation instructions, assembly views, servicing requirements, lubrication instruction, and replacement parts list.

1.03 DELIVERY, STORAGE, AND HANDLING

A. Deliver, store, and handle in accordance with the requirements of Division 1, Section 23 00 50, and this Section.

B. Accept piping specialties on site in shipping containers with labeling in place. Inspect for damage.

C. Provide temporary protective coating on cast iron and steel valves.

D. Protect systems from entry of foreign materials by temporary covers, caps and closures, completing sections of the work, and isolating parts of completed system until installation.

1.04 ENVIRONMENTAL REQUIREMENTS

A. Do not install instruments when areas are under construction, except rough in, taps, supports and test plugs.

1.05 FIELD MEASUREMENTS

A. Verify field measurements before fabrication.

PART 2 PRODUCTS

2.01 PRESSURE GAGES

A. Gage: ASME B40.1, UL 393 with bourdon tube, rotary brass movement, brass socket, front calibration adjustment, black scale on white background.
   1. Case: Steel.
   2. Bourdon Tube: Brass.
   3. Dial Size: 3-1/2 inch diameter.
   4. Mid-Scale Accuracy: One percent.
   5. Scale: Both psi and kPa.

2.02 PRESSURE GAGE TAPS

A. Needle Valve: Brass, 1/4 inch NPT for minimum 300 psi.

B. Ball Valve: Brass, 1/8 inch NPT for 250 psi.

C. Pulsation Damper: Pressure snubber, brass with 1/4 inch NPT connections.

D. Siphon: Steel, Schedule 40, 1/4 inch NPT angle or straight pattern.

2.03 STEM TYPE THERMOMETERS

A. Thermometer: ASTM E1, adjustable angle, red appearing mercury, lens front tube, cast aluminum case with enamel finish, cast aluminum adjustable joint with positive locking device.
   1. Size: 9 inch scale.
   2. Window: Clear glass.
   3. Stem: Brass, 3/4 inch NPT, 3-1/2 inches long.
   4. Accuracy: ASTM E77 2 percent.
   5. Calibration: Both degrees F and degrees C.

2.04 THERMOMETER SUPPORTS

A. Socket: Brass separable sockets for thermometer stems with or without extensions[, and with cap and chain].

B. Flange: 3 inch outside diameter reversible flange, designed to fasten to sheet metal air ducts, with brass perforated stem.

2.05 TEST PLUGS

A. 1/4 inch NPT or 1/2 inch NPT brass fitting and cap for receiving 1/8 inch outside diameter pressure or temperature probe with:
   1. Neoprene core for temperatures up to 200 degrees F.
   2. Nordel core for temperatures up to 350 degrees F.
   3. Viton core for temperatures up to 400 degrees F.

2.06 AIR VENTS

A. Manual Type: Short vertical sections of 2 inch diameter pipe to form air chamber, with 1/8 inch brass needle valve at top of chamber.

2.07 STRAINERS

A. Size 2 inches and Smaller:
   1. Screwed brass or iron body for 175 psig working pressure, Y pattern with 1/32 inch stainless steel perforated screen.

B. Size 2-1/2 inches to 4 inches:
   1. Flanged iron body for 175 psig working pressure, Y pattern with 3/64 inch stainless steel perforated screen.

2.08 RELIEF VALVES

A. Bronze body, Teflon seat, stainless steel stem and springs, automatic, direct pressure actuated capacities ASME certified and labeled.

PART 3 EXECUTION

3.01 INSTALLATION - THERMOMETERS AND GAGES

A. Install one pressure gage for each pump, locate taps before strainers and on suction and discharge of pump; pipe to gage.

B. Install gage taps in piping

C. Install pressure gages with pulsation dampers. Provide needle valve or ball valve to isolate each gage. Extend nipples to allow clearance from insulation.

D. Install thermometers in piping systems in sockets in short couplings. Enlarge pipes smaller than 2-1/2 inches for installation of thermometer sockets. Allow clearance from insulation.

E. Install thermometer sockets adjacent to controls systems thermostat, transmitter, or sensor sockets.

F. Coil and conceal excess capillary on remote element instruments.

G. Provide instruments with scale ranges selected according to service with largest appropriate scale.

H. Install gages and thermometers in locations where they are easily read from normal operating level.

I. Adjust gages and thermometers to final angle, clean windows and lenses, and calibrate.

3.02 INSTALLATION - HYDRONIC PIPING SPECIALTIES

A. Locate test plugs adjacent to control device sockets, and as indicated on Drawings.

B. Install manual air vents at each and every system high point.

C. Provide air separator on suction side of system circulation pump and connect to expansion tank.

D. Provide drain and hose connection with valve on strainer blow down connection.

E. Provide pump suction fitting on suction side of base mounted centrifugal pumps. Remove temporary strainers after cleaning systems.

F. Provide combination pump discharge valve on discharge side of centrifugal pumps.

G. Support pump fittings with floor mounted pipe and flange supports.

H. Provide shut-off valve on water inlet for the each terminal heating unit.

I. Provide balance valve on water outlet for the each terminal heating unit.

J. Provide relief valves on pressure tanks, low-pressure side of reducing valves, heat exchangers, and expansion tanks.

K. Select system relief valve capacity greater than make-up pressure reducing valve capacity. Select equipment relief valve capacity to exceed rating of connected equipment.

L. Pipe relief valve outlet to nearest floor drain.

M. Where one line vents several relief valves, make cross sectional area equal to sum of individual vent areas.

3.03 PROTECTION OF INSTALLED CONSTRUCTION

A. Do not install hydronic pressure gauges until after systems are pressure tested.

END OF SECTION

SECTION 23 31 00
HVAC DUCTS AND CASINGS

PART 1 GENERAL

1.01 SUMMARY

A. Section Includes:
1. Duct Materials.
2. Insulated flexible ducts.
3. Transverse duct connection system.
4. Ductwork fabrication.

1.02 PERFORMANCE REQUIREMENTS

A. Variations of duct configuration, or sizes, are not permitted except by written permission.

1.03 SUBMITTALS

A. Submit in accordance with the requirements of Division 1, Section 23 00 50, and this section. Lead the coordination of the preparation of the coordination drawings indicated below.

B. Product Data: Submit data for duct materials.

C. Test Reports: Indicate pressure tests performed. Include: Date, section tested, test pressure, and leakage rate, following SMACNA HVAC Air Duct Leakage Test Manual.

D. Project Record Documents: Record actual locations of ducts and duct fittings. Record changes in fitting location and type. Show additional fittings used.

1.04 QUALITY ASSURANCE

A. Perform Work in accordance with SMACNA - HVAC Duct Construction Standards - Metal and flexible.

B. Construct ductwork to NFPA 90A and NFPA 96 standards.

1.05 ENVIRONMENTAL REQUIREMENTS

A. Install duct sealant only when temperatures are limits recommended by sealant manufacturers.

B. Maintain recommended temperatures for recommended time periods.

1.06 FIELD MEASUREMENTS

A. Verify field measurements prior to fabrication.

PART 2 PRODUCTS

2.01 DUCT MATERIALS

A. Galvanized Steel Ducts: ASTM A653/A653M galvanized steel sheet, lock-forming quality, having G60 (zinc coating of in conformance with ASTM A90/A90M).

B. Aluminum Ducts: ASTM B209; aluminum sheet, alloy 3003-H14. Aluminum Connectors and Bar Stock: Alloy 6061-T6 or of equivalent strength.

C. Fasteners: Rivets, bolts, or sheet metal screws.

D. Hanger Rod: ASTM A36/A36M; steel, galvanized; threaded both ends, threaded one end, or continuously threaded.

2.02 INSULATED FLEXIBLE DUCTS

A. Product Description: Black polymer film supported by helical-wound spring steel wire; fiberglass insulation; aluminized vapor barrier film.
   1. Pressure Rating: 4 inches wg positive and 0.5 inches wg negative.
   2. Maximum Velocity: 4000 fpm.
   3. Temperature Range: -20 degrees F to 175 degrees F.
   4. Thermal Resistance: 4.2 square feet-hour-degree F per BTU.

2.03 TRANSVERSE DUCT CONNECTION SYSTEM

A. Product Description: SMACNA "E" rated rigidity class connection, interlocking angle and duct edge connection system with sealant, gasket, cleats, and corner clips.

2.04 DUCTWORK FABRICATION

A. Fabricate and support rectangular ducts in accordance with SMACNA HVAC Duct Construction Standards - Metal and Flexible and as indicated on the Drawings. Provide duct material, gages, reinforcing, and sealing for operating pressures indicated.

B. Fabricate and support round ducts with longitudinal seams in accordance with SMACNA HVAC Duct Construction Standards - Metal and Flexible (Round Duct Construction Standards), and. Provide duct material, gages, reinforcing, and sealing for operating pressures indicated.

C. Construct T's, bends, and elbows with minimum radius 1-1/2 times centerline duct width. Where not possible and where rectangular elbows are used, provide airfoil shaped turning vanes. Where acoustical lining is indicated, furnish turning vanes of perforated metal with glass fiber insulation.

D. Increase duct sizes gradually, not exceeding 10 degrees divergence and 20 degrees convergence, both measured from the center line of the duct.

E. Seal joints between duct sections and duct seams with welds, gaskets, mastic adhesives, mastic plus embedded fabric systems, or tape.
   1. Sealants, Mastics and Tapes: Conform to UL 181A. Provide products bearing appropriate UL 181A markings.
   2. All sealing products shall bear UL approval markings.

PART 3 EXECUTION

3.01 EXAMINATION

A. Verify sizes of equipment connections before fabricating transitions.

3.02 INSTALLATION

A. Install and seal ducts in accordance with SMACNA HVAC Duct Construction Standards - Metal and Flexible.

B. During construction, install temporary closures of metal or taped polyethylene on open ductwork to prevent construction dust from entering ductwork system.

C. Use crimp joints with or without bead or beaded sleeve couplings for joining round duct sizes 8 inch and smaller.

D. Use double nuts and lock washers on threaded rod supports.

E. Connect flexible ducts to metal ducts with plastic draw bands and adhesive.

F. For outdoor ductwork, protect ductwork, ductwork supports, linings and coverings from weather. Refer to plans for additional details.

G. Exhaust Outlet Locations:
   1. Minimum Distance from Property Lines: 3 feet.
   2. Minimum Distance from Building Openings: 3 feet.
   3. Minimum Distance from Outside Air Intakes: 10 feet.

3.03 INTERFACE WITH OTHER PRODUCTS

A. Install openings in ductwork where required to accommodate thermometers and controllers. Install Pitot tube openings for testing of systems. Where openings are provided in insulated ductwork, install insulation material inside metal ring.

B. Connect diffusers to low pressure ducts with 5 feet maximum length of flexible duct.

3.04 CLEANING

A. Clean duct system to remove accumulated construction dust. Protect equipment with potential to be harmed by excessive dirt with temporary filters, or bypass during cleaning.

3.05 TESTING

A. Test in accordance with SMACNA HVAC Air Duct Leakage Test Manual.

B. Maximum Allowable Leakage: In accordance with ICC IECC.

3.06 SCHEDULES

A. Ductwork Material Schedule:

AIR SYSTEM	MATERIAL
Supply	Galvanized Steel
Return and Relief	Galvanized Steel
General Exhaust	Galvanized Steel
Shower Exhaust	Aluminum
Outside Air Intake	Galvanized Steel
Combustion Air	Steel

B. Ductwork Pressure Class Schedule:

AIR SYSTEM	PRESSURE CLASS
Constant Volume Supply	1 inch wg
Return and Relief	1 inch wg
General Exhaust	1 inch wg

END OF SECTION

SECTION 23 33 00
AIR DUCT ACCESSORIES

PART 1 GENERAL

1.01 SUMMARY

A. Section Includes:
1. Back-draft dampers.
2. Combination fire-and-smoke dampers.
3. Duct access doors.
4. Dynamic fire dampers.
5. Ceiling fire dampers.
6. Smoke dampers.
7. Volume control dampers.
8. Flexible duct connections.
9. Duct test holes.
10. Dial thermometers.
11. Static pressure gages.

1.02 SUBMITTALS

A. Submit in accordance with the requirements of Division 1, Section 23 00 50, and this section.

B. Shop Drawings: Provide for shop fabricated assemblies including: Volume control dampers, duct access doors, and duct test holes.

C. Product Data: Submit data for shop fabricated assemblies and hardware used.

D. Product Data: Submit for the following:
1. Fire dampers including locations and ratings.
2. Smoke dampers including locations and ratings.
3. Back-draft dampers.
4. Flexible duct connections.
5. Volume control dampers.
6. Duct access doors.
7. Duct test holes.

E. Manufacturer's Installation Instructions: Submit for Fire and Combination Smoke and Fire Dampers.

F. Project Record Documents: Record actual locations of each Air Duct Accessory.

G. Operation and Maintenance Data: Submit for Combination Smoke and Fire Dampers.

1.03 QUALITY ASSURANCE

A. Dampers tested, rated and labeled in accordance with the latest UL requirements.

B. Damper pressure drop ratings based on tests and procedures performed in accordance with AMCA 500.

1.04 DELIVERY, STORAGE, AND HANDLING

A. Deliver, store, and handle in accordance with the requirements of Division 1, Section 23 00 50, and this Section.

B. Protect dampers from damage to operating linkages and blades.

C. Delivery: Deliver materials to site in manufacturer's original, unopened containers and packaging, with labels clearly indicating manufacturer and material.

D. Storage: Store materials in a dry area indoor, protected from damage.

E. Handling: Handle and lift dampers in accordance with manufacturer's instructions. Protect materials and finishes during handling and installation to prevent damage.

1.05 FIELD MEASUREMENTS

A. Verify field measurements prior to fabrication.

1.06 COORDINATION

A. Coordinate Work, where appropriate, with building control Work.

PART 2 PRODUCTS

2.01 DUCT ACCESS DOORS

A. Fabricate in accordance with SMACNA HVAC Duct Construction Standards - Metal and Flexible.

B. Fabrication: Rigid and close fitting of galvanized steel with sealing gaskets and quick fastening locking devices. For insulated ductwork, furnish minimum 1 inch thick insulation with sheet metal cover.
   1. Less than 12 inches square, secure with sash locks.
   2. Up to 18 inches Square: Furnish two hinges and two sash locks.
   3. Up to 24 x 48 inches: Three hinges and two compression latches.
   4. Larger Sizes: Furnish additional hinge.
   5. Access panels with sheet metal screw fasteners are not acceptable.

2.02 DYNAMIC FIRE DAMPERS

A. Fabricate in accordance with NFPA 90A and UL 555.

B. Fire Resistance: As required by the fire rating of the assembly into which they are installed.

C. Dynamic Closure Rating: Dampers classified for dynamic closure to 2000 fpm and 4 inches wg static pressure.

D. Construction:
   1. Integral Sleeve Frame: Minimum 20 gage roll formed galvanized steel. Length: 12 inches.
   2. Blades:
      a. Style: Curtain type.
      b. Action: Spring or gravity closure upon fusible link release.
      c. Material: Minimum 24 gage roll formed, galvanized steel.
   3. Closure Springs: Type 301 stainless steel, constant force type, if required.

E. Fusible Link Release Temperature: 165 degrees F.

F. Mounting: Vertical or horizontal.

G. Duct Transition Connection, Damper Style:
   1. B style - rectangular connection, blades out of air stream, free area to match duct size.
   2. CR style - round connection, sealed.
   3. CO style - oval connection, sealed.

H. Finish: Mill galvanized.

2.03 VOLUME CONTROL DAMPERS

A. Fabricate in accordance with SMACNA HVAC Duct Construction Standards - Metal and Flexible.

B. Multi-Blade Damper: Fabricate of opposed blade pattern with maximum blade sizes 8 x 72 inches. Assemble center and edge crimped blades in prime coated or galvanized frame channel with suitable hardware.

C. End Bearings: Except in round ductwork 12 inches and smaller, furnish end bearings. On multiple blade dampers, furnish oil-impregnated nylon or sintered bronze bearings. Furnish closed end bearings on ducts having pressure classification over 2 inches wg.

D. Quadrants:
   1. Furnish locking, indicating quadrant regulators on single and multi-blade dampers.
   2. On insulated ducts mount quadrant regulators on standoff mounting brackets, bases, or adapters.
   3. Where rod lengths exceed 30 inches furnish regulator at both ends.

2.04 FLEXIBLE DUCT CONNECTIONS

A. Fabricate in accordance with SMACNA HVAC Duct Construction Standards - Metal and Flexible.

B. Connector: Fabric crimped into metal edging strip.
   1. Fabric: UL listed fire-retardant neoprene coated woven glass fiber fabric conforming to NFPA 90A, minimum density 30 oz per sq yd.
   2. Net Fabric Width: Approximately 2 inches wide.

2.05 DUCT TEST HOLES

A. Permanent Test Holes: Factory fabricated, air tight flanged fittings with screw cap. Furnish extended neck fittings to clear insulation.

2.06 DIAL THERMOMETERS

A. Thermometer: ASTM E1, stainless steel case, adjustable angle with front calibration, bimetallic helix actuated with silicone fluid damping, white with black markings and black pointer hermetically sealed lens, stainless steel stem.
   1. Size: 3 inch diameter dial.
   2. Lens: Clear glass.
   3. Accuracy: 1 percent.
   4. Calibration: Both degrees F and degrees C.

2.07 STATIC PRESSURE GAGES

A. Dial Gages: 3-1/2 inch diameter dial in metal case, diaphragm actuated, black figures on white background, front calibration adjustment, 2 percent of full scale accuracy.

B. Inclined Manometer: Plastic with red liquid on white background with black figures, front calibration adjustment, 3 percent of full scale accuracy.

C. Accessories: Static pressure tips with compression fittings for bulkhead mounting, 1/4 inch diameter tubing.

PART 3 EXECUTION

3.01 EXAMINATION

A. Verify rated walls are ready for fire damper installation.

B. Verify ducts and equipment are ready for accessories.

C. Check location of air outlets and inlets and make necessary adjustments in position to conform to architectural features, symmetry, and lighting arrangement.

3.02 INSTALLATION.

A. Install in accordance with NFPA 90A, and follow SMACNA HVAC Duct Construction Standards - Metal and Flexible. Refer to Section 23 31 00 for duct construction and pressure class.

B. Install back-draft dampers on exhaust fans or exhaust ducts nearest to outside and where indicated on Drawings.

C. Access Doors: Install access doors at the following locations and as indicated on Drawings:
1. Spaced every 50 feet of straight duct.
2. Upstream of each elbow.
3. Before and after each duct mounted filter.
4. Before and after each duct mounted coil.
5. Before and after each duct mounted fan.
6. Before and after each automatic control damper.
7. Before and after each fire damper, smoke damper, and combination fire and smoke damper.
8. Downstream of each VAV box.
9. Install at locations for cleaning kitchen exhaust ductwork in accordance with NFPA 96.

D. Access Door Sizes: Install minimum 8 x 8 inch size for hand access, 18 x 18 inch size for shoulder access. Install 4 x 4 inch for balancing dampers only. Review locations prior to fabrication.
1. Mark access doors for fire and smoke dampers on outside surface, with minimum 1/2 inch high letters reading: FIRE/SMOKE DAMPER, SMOKE DAMPER, OR FIRE DAMPER.

E. Install permanent duct test holes where required for testing and balancing purposes.

F. Install fire dampers, combination fire and smoke dampers, and smoke dampers at locations as indicated on Drawings. Install with required perimeter mounting angles, sleeves, breakaway duct connections, corrosion resistant springs, bearings, bushings and hinges.
   1. Install smoke dampers and combination smoke and fire dampers in accordance with NFPA 92A.
   2. Install dampers square and free from racking with blades running horizontally.
   3. Do not compress or stretch damper frame into duct or opening.
   4. Handle damper using sleeve or frame. Do not lift damper using blades, actuator, or jack shaft.
   5. Install bracing for multiple section assemblies to support assembly weight and to hold against system pressure. Install bracing as needed.

3.03 INSTALLATION - THERMOMETERS

A. Install thermometers in air duct systems on flanges.

B. Where thermometers are provided on local panels, duct mounted thermometers are not required.

C. Locate duct-mounted thermometers minimum 10 feet downstream of mixing-dampers, coils, or other devices causing air turbulence.

D. Install static pressure gages to measure across filters and filter banks, (inlet to outlet). On multiple banks, provide manifold and single gage.

E. Provide instruments with scale ranges selected according to service with largest appropriate scale.

F. Install thermometers in locations where they are easily read from normal operating level. Install vertical to 45 degrees off vertical.

G. Adjust thermometers to final angle, clean windows and lenses, and calibrate to zero.

3.04 DEMONSTRATION

A. Demonstrate re-setting of fire, smoke, and combination fire-smoke dampers to Owner's representative.

END OF SECTION

SECTION 23 34 00
HVAC FANS

PART 1 GENERAL

1.01 SUMMARY

A. Section Includes:
1. Down-blast centrifugal roof fans.
2. Duct blowers or cabinet fans.
3. Centrifugal square inline fans.

1.02 SUBMITTALS

A. Submit in accordance with the requirements of Division 1, Section 23 00 50, and this section.

B. Shop Drawings: Indicate size and configuration of fan assembly, mountings, weights, ductwork, and accessory connections.

C. Product Data: Submit data on each type of fan and include accessories, fan curves with specified operating point plotted, power, RPM, sound power levels for both fan inlet and outlet at rated capacity, electrical characteristics and connection requirements.

D. Manufacturer's Installation Instructions: Submit fan manufacturer’s instructions.

E. Project Record Drawings: indicate the actual location of each fan.

F. Operation and Maintenance Data: Submit instructions for lubrication, motor and drive replacement, spare parts list, and wiring diagrams.

1.03 QUALITY ASSURANCE

A. Performance Ratings: Conform to AMCA 210 and bear AMCA Certified Rating Seal.

B. Sound Ratings: AMCA 301, tested to AMCA 300, and bear AMCA Certified Sound Rating Seal.

C. UL Compliance: UL listed and labeled, designed, manufactured, and tested in accordance with UL 705.

D. Balance Quality: Conform to AMCA 204.

1.04 DELIVERY, STORAGE, AND HANDLING

A. Deliver, store, and handle in accordance with the requirements of Division 1, Section 23 00 50, and this Section.

B. Protect motors, shafts, and bearings from weather and construction dust.

1.05 FIELD MEASUREMENTS

A. Verify field measurements prior to fabrication.

PART 2 PRODUCTS

2.01 DOWN-BLAST CENTRIFUGAL ROOF FANS

A. Fan Unit: Down-blast type. V-belt drive, with spun aluminum housing; resilient mounted motor; aluminum wire bird screen; square base to suit roof curb with continuous curb gaskets.

B. Sheaves: Cast iron or steel, dynamically balanced, bored to fit shafts and keyed; variable and adjustable pitch motor sheave selected so required rpm is obtained with sheaves set at mid-position; fan shaft with self-aligning pre-lubricated ball bearings.

C. Motor: Open drip proof.

D. Roof Curb: 12 inches high (as measured from the finished roof surface), of galvanized steel construction with continuously welded seams, built-in cant strips, 1 inch insulation and curb bottom, hinged curb adapter, and factory installed nailer strip. Curb design shall include compensation for slope of roof so fan sits level.

E. Disconnect Switch: Factory wired, non-fusible, in fan housing for thermal overload protected motor, NEMA 250 Type 1 enclosure.

F. Accessories:
1. Motor Operated Damper: Aluminum multiple blade construction, felt edged with offset hinge pin, nylon bearings, blades linked and line voltage motor drive, power open, spring return closed.

G. Performance: See Plans

H. Electrical Characteristics and Components: See Plans.

2.02 DUCT BLOWER OR CABINET FANS

A. Product Description: Direct drive with galvanized steel housing lined with 1/2 inch acoustic glass fiber insulation, removable side panel for access, inlet and outlet duct collar, gravity back-draft damper in discharge, horizontal hanging brackets.

B. Fan Wheel: Double width-double inlet centrifugal type.

C. Sheaves: Cast iron or steel, dynamically balanced, bored to fit shafts and keyed; variable and adjustable pitch motor sheaves selected so required rpm is obtained with sheaves set at mid-position; fan shaft with self-aligning pre-lubricated ball bearings.

D. Motor and Drive Mounting: Within air stream.

E. Motor: Open drip proof type mounted on vibration isolators.

F. Accessories:
1. Disconnect Switch: NEMA 250 Type 1 enclosure.

G. Performance: See Plans.

H. Electrical Characteristics and Components: See Plans.

2.03 CENTRIFUGAL SQUARE INLINE FANS

A. Product Description: V-belt drive with galvanized steel housing, integral inlet cone, removable access doors on 3 sides, inlet and outlet duct collar, gravity back-draft damper in discharge, horizontal hanging brackets.

B. Fan Wheel: Backward inclined centrifugal type, aluminum construction.

C. Sheaves: Cast iron or steel, dynamically balanced, bored to fit shafts and keyed; variable and adjustable pitch motor sheaves selected so required rpm is obtained with sheaves set at mid-position; fan shaft with self-aligning pre-lubricated ball bearings.

D. Motor and Drive Mounting: Out of air stream.

E. Motor: Open drip proof.

F. Bearings: ABMA 9 life at 200,000 hours.

G. Accessories:
1. Belt guard.
2. Motor cover.
3. Inlet safety screen (if open inlet).
4. Outlet safety screen (if open outlet).
5. Flexible duct connectors.
6. Flanged connections.

H. Performance: See Plans.

I. Electrical Characteristics and Components: See Plans.

PART 3 EXECUTION

3.01 EXAMINATION

A. Verify roof curbs are installed and dimensions are as instructed by manufacturer.

3.02 PREPARATION

A. Furnish roof curbs to General Trade Contractor for installation as part of the roofing system.

3.03 INSTALLATION

A. Secure fans with cadmium plated steel lag screws.

B. Suspended Cabinet Fans: Install flexible connections between fan and ductwork. Ensure metal bands of connectors are parallel with minimum one inch flex between ductwork and fan while running.

C. Install back-draft dampers on inlet to exhaust fans.

D. Provide back-draft dampers on outlet from cabinet and ceiling fans, and as indicated on Drawings.

E. Install safety screen where inlet or outlet is exposed.

F. Provide sheaves required for final air balance as a part of the base bid for the project.

3.04 CLEANING

A. Clean inside of fan cabinet.

3.05 DEMONSTRATION

A. Demonstrate fan operation and maintenance procedures to Owner’s staff as directed.

3.06 PROTECTION OF FINISHED WORK

A. Do not operate fans for until ductwork is clean, filters in place, bearings lubricated, and fan has been test run under observation.

END OF SECTION

SECTION 23 37 00
AIR OUTLETS AND INLETS

PART 1 GENERAL

1.01 SUMMARY

A. Section Includes:
1. Rectangular Ceiling Diffusers.
2. Ceiling Grid Core Exhaust and Return Grilles.
3. Wall Supply Grilles.
4. Wall Exhaust and Return Grilles.

1.02 SUBMITTALS

A. Submit in accordance with the requirements of Division 1, Section 23 00 50, and this section.

B. Product Data: Submit sizes, finish, and type of mounting. Submit schedule of outlets and inlets showing type, size, location, application, and noise level.

C. Test Reports: Rating of air outlet and inlet performance.

D. Project Record Documents: Record actual locations of air outlets and inlets.

1.03 QUALITY ASSURANCE

A. Test and rate diffuser, register, and grille performance in accordance with ASHRAE 70.

B. Test and rate louver performance in accordance with AMCA 500.

PART 2 PRODUCTS

2.01 RECTANGULAR CEILING DIFFUSERS

A. Type: Square, adjustable pattern, stamped, multi-core diffuser to discharge air in 360 degree.

B. Frame: Surface mount, or Inverted T-bar Lay-in.

C. Fabrication: Steel, or Aluminum (as noted on the Plans) with baked enamel off-white finish.

2.02 CEILING GRID CORE EXHAUST AND RETURN GRILLES

A. Type: Fixed grilles of 1/2 x 1/2 x 1 inch louvers.

B. Fabrication: Aluminum with factory clear lacquer finish.

C. Frame: 1-1/4 inch margin with concealed mounting, or Channel lay-in frame for suspended grid ceilings.

2.03 WALL SUPPLY GRILLES

A. Type: Streamlined and individually adjustable blades, 3/4 inch minimum depth, 3/4 inch maximum spacing with spring or other device to set blades, vertical face, double deflection.

B. Frame: 1-1/4 inch margin with concealed mounting and gasket.

C. Fabrication: Steel with 20 gage minimum frames and 22 gage minimum blades, steel and aluminum with 20 gage minimum frame, or aluminum extrusions, with factory off-white baked enamel finish.

2.04 WALL EXHAUST AND RETURN GRILLES

A. Type: Streamlined blades, 3/4 inch minimum depth, 3/4 inch maximum spacing, with spring or other device to set blades, vertical face.

B. Frame: 1-1/4 inch margin with concealed mounting.

C. Fabrication: Steel with 20 gage minimum frames and 22 gage minimum blades, Steel and aluminum with 20 gage minimum frame, or Aluminum extrusions, with factory off-white baked enamel finish.

PART 3 EXECUTION

3.01 EXAMINATION

A. Inlets and outlets shall be installed as shown on the Architectural Reflected Ceiling Plans.

B. Verify ceiling and wall systems are ready for installation.

C. Before ordering any materials, confirm that items shown and specified are appropriate for the ceiling and wall construction into which they will be installed.

3.02 INSTALLATION

A. Install diffusers to ductwork with airtight connection.

B. Install balancing dampers on duct take-off to each air inlet or outlet.

C. Paint visible portion of ductwork behind air outlets and inlets matte black.

D. Do not locate air inlets or outlets in floors of toilet or bathing rooms.

3.03 INTERFACE WITH OTHER PRODUCTS

A. Check location of air inlets and outlets, and make necessary adjustments in position to conform to architectural features, symmetry, and lighting arrangement.

END OF SECTION

SECTION 23 81 03
PACKAGED ROOFTOP AIR CONDITIONING UNITS

PART 1 GENERAL

1.01 SUMMARY

A. Section Includes:
1. Packaged rooftop air conditioning unit.
2. Roof curb.

1.02 SUBMITTALS

A. Submit in accordance with the requirements of Division 1, Section 23 00 50, and this section.

B. Product Data: Submit data indicating:
1. Cooling and heating capacities.
2. Dimensions.
3. Weights.
4. Rough-in connections and connection requirements.
5. Duct connections.
6. Electrical requirements with electrical characteristics and connection requirements.
7. Controls.
8. Accessories.

C. Manufacturer's Installation Instructions: Submit assembly, support details, connection requirements, and include start-up instructions.

D. Manufacturer’s Field Reports: Submit start-up report for each unit.

E. Project Record Documents:
1. Record actual locations of controls installed remotely from units.
2. Record actual locations of each unit with dimensions from fixed points.

F. Operation and Maintenance Data: Submit manufacturer's descriptive literature, operating instructions, installation instructions, and maintenance and repair data.

1.03 QUALITY ASSURANCE

A. Cooling Capacity: Rate in accordance with ARI 210/240.

B. Sound Rating: Measure in accordance with ARI 270.

C. Insulation and adhesives: Meet requirements of NFPA 90A.

D. Performance Requirements: Conform to minimum SEER prescribed by ASHRAE 90.1 when tested in accordance with ARI 210/240.

E. Outside Air Damper Leakage: Test in accordance with AMCA 500.

1.04 DELIVERY, STORAGE, AND HANDLING

A. Deliver, store, and handle in accordance with the requirements of Division 1, Section 23 00 50, and this Section.

B. Accept units on site. Inspect for damage.

C. Protect units from damage by storing off roof until roof mounting curbs are in place.

1.05 COORDINATION

A. Coordinate installation of roof curbs with roof structure, roof deck and roof membrane installation.

1.06 WARRANTY

A. Furnish five year manufacturer's warranty for compressors.

B. Furnish five year manufacturer's warranty for heat exchangers.

PART 2 PRODUCTS

2.01 ROOFTOP AIR CONDITIONING UNITS

A. Product Description: Self-contained, packaged, factory assembled and wired, consisting of roof curb, cabinet, supply fan, refrigerant cooling coil, compressor, refrigeration circuit, condenser, gas-fired heating section, air filters, mixed air casing, controls, and accessories.

B. Configuration: As indicated on Drawings.

C. Roof Mounting Curb:
1. 14 inch high (measured from the finished roof surface), galvanized steel, channel frame with gaskets, nailer strips.
2. Full perimeter type for mounting under entire unit.
3. For sloped roof condition, provide curb that is specially built to allow the unit to sit level.

D. Cabinet:
1. Designed for outdoor installation with weatherproof construction.
2. Panels: Constructed of steel with baked enamel finish meeting salt spray test in accordance with ASTM B117. Furnish access doors or removable access panels.
3. Insulation: Factory applied to exposed vertical and horizontal panels. one inch thick neoprene coated glass fiber with edges protected from erosion.

E. Supply Fan: Forward curved centrifugal type, resiliently mounted with direct, or V-belt drive, adjustable variable pitch motor pulley, high efficiency motor. Motor permanently lubricated with built-in thermal overload protection.

F. Evaporator Coil: Constructed of copper tubes expanded onto aluminum fins. Galvanized drain pan with piping connection. Factory leak tested under water.

G. Compressor: Hermetically sealed, resiliently mounted with positive lubrication, and internal motor overload protection. Furnish internal vibration isolators, and short cycle protection.

H. Refrigeration circuit: Furnish the following for each circuit: Fixed orifice control filter-drier, suction, discharge, and liquid line service valves with gauge ports, high and low pressure safety controls. Dehydrate and factory charge each circuit with oil and refrigerant.

I. Condenser:
   1. Coil: Copper tube aluminum fin coil assembly with subcooling rows and coil guard. Factory leak tested under water.
   2. Condenser Fan: Direct drive propeller fans statically and dynamically balanced. Wired to operate with compressor. Motor permanently lubricated with built-in thermal overload protection. Furnish high efficiency fan motors.

J. Gas-Fired Heating Section:
   1. Fuel: Natural gas.
   2. Heat Exchangers: Aluminized Stainless steel, welded construction.
   3. Gas Burner: Atmospheric type burner with adjustable combustion air supply, pressure regulator, gas valves, manual shut-off, intermittent spark, flame sensing device, and automatic 100 percent shut-off pilot. Require unit fan operation before allowing gas valve to open.

K. Air Filters: 2 inch thick glass fiber disposable media in metal frames. 25 to 30 percent efficiency based on ASHRAE 52.1 (Farr 30/30, or equal).

L. Mixed Air Casing:
   1. Outside Air Damper Leakage: Maximum 3.0 cfm per square foot at 1.0 inch wg pressure differential.
   2. Economizer: Factory installed fully modulating motorized outside air and return air dampers controlled by enthalpy controller with minimum position setting. Outside air damper normally closed and return air damper normally open. Furnish barometric relief damper capable of closing by gravity. Furnish rain hood with screen for outside air intake. Provide economizer components and controls in accordance with ICC IECC.

M. Controls:
1. Furnish low limit thermostat in supply air to close outside air damper and stop supply fan.
2. Furnish terminal strip on unit for connection of operating controls to remote panel.
3. Thermostat: 7 day programmable electronic space thermostat with 1 stage heating and 1 stage cooling with manual changeover and heating setback and cooling setup capability. Furnish system selector switch heat-off-cool and fan control switch, auto-on.
4. Furnish interface to Building Automation and Control System.
5. Microprocessor Based Controls:
   a. Factory mounted with the following features:
      1) Monitor each mode of operation.
      2) Evaporator fan status.
      3) Filter status.
      4) Indoor air quality.
      5) Supply air temperature.
      6) Outdoor air temperature.

N. Accessories:
1. Convenience Outlet: Factory installed, 115 volt, 15 amp, GFCI type, internally mounted.

O. Capacity: See Plans.

2.02 ELECTRICAL CHARACTERISTICS AND COMPONENTS

A. Electrical Characteristics: See Plans.

B. Disconnect Switch: Factory mounted, non-fused type, interlocked with access door, accessible from outside unit, with power lockout capability.

PART 3 EXECUTION

3.01 EXAMINATION

A. Verify roof curbs are installed and dimensions are as [shown on shop drawings] [instructed by manufacturer].

3.02 PREPARATION

A. Furnish roof curbs to General Trades Contractor for installation as a part of the roofing system.

3.03 INSTALLATION

A. Roof Curb:
   1. Install roof curb so top of curb is level.
   2. Install units on roof curb providing watertight enclosure to protect ductwork and utility services.
   3. Install gasket material between unit base and roof curb.

B. Connect units to supply and return ductwork with flexible connections.

C. Install condensate piping with trap and route from drain pan to splash block on roof.

D. Install components furnished loose for field mounting.

E. Install electrical devices furnished loose for field mounting.

F. Install control wiring between unit and field installed accessories.

3.04 MANUFACTURER'S FIELD SERVICES

A. Furnish initial start-up and shutdown during first year of operation, including routine servicing and checkout.

3.05 CLEANING

A. Clean coils and inside of unit cabinet.

B. Install new throwaway filters in units at Substantial Completion.

3.06 DEMONSTRATION

A. Demonstrate proper unit operation and maintenance to Owner’s staff as directed.

END OF SECTION

SECTION 23 81 26

SPLIT-SYSTEM AIR-CONDITIONERS

PART 1 GENERAL

1.01 SUMMARY

A. Section Includes:
1. Air handling unit.
2. Condensing unit.

1.02 SUBMITTALS

A. Submit in accordance with the requirements of Division 1, Section 23 00 50, and this section.

B. Product Data: Submit data indicating:
1. Cooling and heating capacities.
2. Dimensions.
3. Weights.
4. Rough-in connections and connection requirements.
5. Duct connections.
6. Electrical requirements with electrical characteristics and connection requirements.
7. Controls.
8. Accessories.

C. Manufacturer's Installation Instructions: Submit assembly, support details, connection requirements, and include start-up instructions.

D. Manufacturer’s Field Reports: Submit start-up report for each unit.

E. Project Record Documents: Record actual locations of controls installed remotely from units.

F. Operation and Maintenance Data: Submit manufacturer's descriptive literature, operating instructions, installation instructions, and maintenance and repair data.

1.03 QUALITY ASSURANCE

A. Performance Requirements: Energy Efficiency Rating (EER) not less than prescribed by ASHRAE 90.1 when used in combination with compressors and evaporator coils when tested in accordance with ARI 210/240.

B. Cooling Capacity: Rate in accordance with ARI 210/240.

C. Sound Rating: Measure in accordance with ARI 270.

D. Insulation and adhesives: Meet requirements of NFPA 90A.

1.04 DELIVERY, STORAGE, AND HANDLING

A. Deliver, store, and handle in accordance with the requirements of Division 1, Section 23 00 50, and this Section.

B. Accept units and components on site in factory protective containers, with factory shipping skids and lifting lugs. Inspect for damage.

C. Comply with manufacturer's installation instruction for rigging, unloading and transporting units.

D. Protect units from weather and construction traffic by storing in dry, roofed location.

1.05 COORDINATION

A. Coordinate installation of condensing units with concrete pad.

B. Coordinate installation of air handling units with building structure.

PART 2 PRODUCTS

2.01 SPLIT SYSTEM HEAT PUMP UNITS

A. Product Description: Split system heat pump consisting of indoor air handling unit and roof mounted refrigerant compressor unit. Include cabinets, fans, refrigerant coils, compressor, refrigeration circuit, air filters, controls, accessories, and refrigeration specialties.

2.02 INDOOR AIR HANDLING UNIT

A. Configuration: As indicated on Drawings.

B. Cabinet:
1. Panels: Constructed of galvanized steel with baked enamel finish. Access Panels: Located on both sides of unit. Furnish with duct collars on inlets and outlets.
2. Insulation: Factory applied to each surface to insulate entire cabinet. 1/2 inch thick neoprene coated glass fiber with edges protected from erosion.

C. Fan: Forward curved centrifugal type, resiliently mounted with adjustable belt drive and high efficiency motor. Motor permanently lubricated with built-in thermal overload protection.

D. Coil: Constructed of copper tubes expanded onto aluminum fins. Factory leak tested under water. Removable, PVC construction, double-sloped drain pan with piping connections on both sides.

E. Refrigeration System: Single refrigeration circuit controlled by factory installed thermal expansion valve.

F. Air Filters: 1 inch thick glass fiber disposable media in metal frames.

2.03 ROOF MOUNTED COMPRESSOR UNIT

A. General: Factory assembled and tested consisting of casing, compressors, air to refrigerant coil, fans, motors, and unit controls.

B. Unit Casings: Exposed casing surfaces constructed of galvanized steel with manufacturer's standard baked enamel finish. Designed for outdoor installation and complete with weather protection for components and controls, and complete with removable panels for required access to compressors, controls, fans, motors, and drives.

C. Compressor: Single refrigeration circuit with rotary or scroll type compressors, resiliently mounted, with positive lubrication, and internal motor overload protection.

D. Refrigerant Coil: Constructed of copper tubing mechanically bonded to aluminum fins, factory leak and pressure tested.

E. Controls: Furnish operating and safety controls including high and low pressure cutouts. Control transformer. Furnish magnetic contactors for compressor and fan motors.

F. Fans and Drives: Direct drive propeller fans statically and dynamically balanced. Wired to operate with compressor. Permanently lubricated ball bearing type motors with built-in thermal overload protection. Furnish high efficiency fan motors.

G. Accessories: Furnish the following accessories:
1. Controls to provide low ambient cooling to -20 degrees F.
2. Time delay relay.
3. Anti-short cycle timer.
4. Disconnect switch.
5. Coil Guard: Fan openings furnished with PVC coated steel wire safety guards.
6. Suction and discharge pressure gauges.

H. Refrigeration specialties: Furnish the following:
1. Charge of compressor oil.
2. Holding charge of refrigerant.
3. Replaceable core type filter drier.
4. Liquid line sight glass and moisture indicator.
5. Shut-off valves on suction and liquid piping.
6. Liquid line solenoid valve.
7. Charging valve.
8. Oil level sight glass.
9. Crankcase heater.
10. Hot gas muffler.
11. Pressure relief device.

I. Refrigerant: Furnish required charge of refrigerant.

2.04 CONTROLS

A. Thermostat: Electronic space thermostat with single stage heating and single stage cooling with manual changeover and heating setback and cooling setup capability. Furnish system selector switch heat-off-cool and fan control switch, auto-on. Compatible with existing Delta Control System.

B. Furnish interface to Building Automation and Control System.

2.05 CAPACITY: SEE PLANS

2.06 ELECTRICAL CHARACTERISTICS AND COMPONENTS

A. Electrical Characteristics: See Plan:

B. Disconnect Switch: Factory mounted, non-fused type, interlocked with access door, accessible from outside unit, with power lockout capability.

PART 3 EXECUTION

3.01 INSTALLATION – INDOOR AIR HANDLING UNIT

A. Install air handling units on wall near ceiling and as shown on plan. Coordinate final location with Owner before any rough-in is performed.

B. Install condensate piping with trap and route from drain pan to nearest existing condensate riser, or provide new riser to basement and connect to existing condensate piping system.

C. Install components furnished loose for field mounting.

D. Install connection to electrical power wiring. Coordinate electrical requirements with EC before rough-in of any electrical wiring or systems.

3.02 INSTALLATION – ROOF MOUNTED COMPRESSOR UNIT

A. Install units on 4x4 pressure treated lumber similar to existing unit installation ((2) lengths of 4x4 approximately 36 inches long).

B. Install refrigerant piping from roof mounted compressor unit to indoor air handler in accordance with unit manufacturers' requirements. Make roof penetration through Pate pipe curbs, or similar.

C. Install refrigerant specialties as required by equipment manufacturer.

D. Evacuate refrigerant piping and install initial charge of refrigerant.

E. Install electrical devices furnished loose for field mounting.

F. Install and connect control and power wiring between indoor air handling unit and roof mounted compressor unit.

G. Install all accessories that may be provided loose with the equipment.

H. Install connection to electrical power wiring in accordance with Section 26 05 03.

3.03 MANUFACTURER'S FIELD SERVICES

A. Furnish initial start-up and shutdown during first year of operation, including routine servicing and checkout.

3.04 CLEANING

A. Clean coils and inside of unit cabinets.

B. Install new throwaway filters in units at Substantial Completion.

3.05 DEMONSTRATION

A. Demonstrate starting, maintenance, and operation of condensing unit to Owner’s staff as directed.

END OF SECTION

SECTION 23 82 00
CONVECTION HEATING UNITS

PART 1 GENERAL

1.01 SUMMARY

A. Section Includes:
1. Electric Duct Coils.
2. Finned Tube Radiation.
3. Cabinet Unit Heaters.

1.02 SUBMITTALS

A. Submit in accordance with the requirements of Division 1, Section 23 00 50, and this section.

B. Shop Drawings: Indicate cross sections of cabinets, grilles, bracing and reinforcing, and typical elevations. Indicate schedules of equipment and enclosures typically indicating length and number of pieces of element and enclosure, corner pieces, end caps, cap strips, access doors, pilaster covers.

C. Product Data: Submit coil and frame configurations, dimensions, materials, rows, connections, and rough-in dimensions. Submit mechanical and electrical service locations, capacities and accessories or optional items.

D. Manufacturer's Installation Instructions: Submit assembly, support details, and connection requirements.

E. Project Record Documents: Record actual locations of components and locations of access doors in radiation cabinets required for access to valves.

F. Operation and Maintenance Data: Submit manufacturer’s descriptive literature, operating instructions, installation instructions, maintenance and repair data, and parts listings.

1.03 DELIVERY, STORAGE, AND HANDLING

A. Deliver, store, and handle in accordance with the requirements of Division 1, Section 23 00 50, and this Section.

B. Accept units on site in factory packing. Inspect for damage. Store under roof.

C. Protect coil fins from crushing and bending by leaving in shipping cases until installation, and by storing indoors. Protect coils from entry of dirt and debris with pipe caps or plugs.

1.04 FIELD MEASUREMENTS

A. Verify field measurements prior to fabrication.

PART 2 PRODUCTS

2.01 ELECTRIC COILS

A. Assembly: UL listed and labeled, with terminal control box and hinged cover, splice box, coil, casing, and controls.

B. Coil: Enclosed copper tube, aluminum finned element of coiled nickel-chrome resistance wire centered in tubes and embedded in refractory material.

C. Casing: Die formed channel frame of 16 gage galvanized steel with 3/8 inch mounting holes on 3 inch centers. Furnish tube supports for coils longer than 36.

D. Controls: SCR modulating control. Automatic reset thermal cut-out, built-in magnetic contactors, control circuit transformer and fuse, manual reset thermal cut-out, air flow proving device, fused disconnect.

2.02 FINNED TUBE RADIATION

A. Heating Elements: 1-1/4 inch ID steel tube, mechanically expanded into evenly spaced steel fins.

B. Element Hangers: Quiet operating, ball bearing cradle type providing unrestricted longitudinal movement, on enclosure brackets.

C. Enclosures: 0.0478 inch thick steel up to 18 inches in height, 0.598 inch steel over 18 inches in height or aluminum as detailed, with easily jointed components for wall to wall installation. Support rigidly, on wall or floor mounted brackets at 3 feet on center maximum.

D. Finish: Factory applied baked enamel of color as selected.

E. Damper: Where heating media is not thermostatically controlled, furnish knob-operated internal damper at enclosure air outlet.

F. Access Doors: For otherwise inaccessible valves, furnish factory-made permanently hinged access doors, 6 x 7 inch minimum size, integral with cabinet.

G. Capacity: As scheduled, based on 65 degrees F entering air temperature, 180 degrees F average water temperature.

2.03 UNIT HEATERS

A. Coils: Seamless copper tubing, 0.025 inch minimum wall thickness, silver brazed to steel headers, and with evenly spaced aluminum fins mechanically bonded to tubing.

B. Casing: 0.0478-inch thick steel with threaded pipe connections for hanger rods.

C. Finish: Factory applied baked enamel, standard factory color.

D. Fan: Direct drive propeller type, statically and dynamically balanced, with fan guard; horizontal models with permanently lubricated sleeve bearings; vertical models with grease lubricated ball bearings.

E. Air Outlet: Adjustable pattern diffuser on projection models and four-way louvers on horizontal throw models.

F. Motor: Permanently lubricated sleeve bearings on horizontal models, grease lubricated ball bearings on vertical models.

G. Control: Local disconnect switch.

H. Capacity: As scheduled, based on 65 degrees F entering air temperature, 180 degrees F average water temperature.

I. Electrical Characteristics: See Plans.

2.04 CABINET UNIT HEATERS

A. Coils: Evenly spaced aluminum fins mechanically bonded to copper tubes, designed for 100 psi and 220 degrees F.

B. Cabinet: 0.0598 inch thick steel with exposed corners and edges rounded, easily removed panels, glass fiber insulation and integral air outlet and inlet grilles.

C. Finish: Factory applied baked enamel of color to be selected, on visible surfaces of enclosure or cabinet.

D. Fans: Centrifugal forward-curved double-width wheels, statically and dynamically balanced, direct driven.

E. Motor: Tap wound multiple speed permanent split capacitor with sleeve bearings, resiliently mounted.

F. Control: Multiple speed switch, factory wired, located in cabinet.

G. Filter: Easily removed 1 inch thick glass fiber throw-away type, located to filter air before coil.

H. Capacity: As Scheduled, based on 65 degrees F entering air temperature, 180 degrees F average water temperature.

I. Electrical Characteristics: See Plans.

PART 3 EXECUTION

3.01 EXAMINATION

A. For recessed units, verify recess dimensions are correct size.

B. Verify wall construction is ready for installation.

C. Verify ductwork is ready for installation.

D. Verify concealed blocking and supports are in place and connections are correctly located.

3.02 INSTALLATION

A. Install air coils in ducts and casings in accordance with SMACNA HVAC Duct Construction Standards, Metal and Flexible.

B. Support air coil sections independently with steel channel or double angle frames and secure to casings. Arrange supports to avoid piercing drain pans. Install with airtight seal between coil and duct or casing.

C. Protect coils to prevent damage to fins and flanges. Comb out bent fins.

D. Install coils level.

E. Make connections to coils with unions and flanges.

F. Insulate piping headers located outside airflow, insulate as specified for piping.

G. Install equipment exposed to finished areas after walls and ceilings are finished and painted. Avoid damage.

H. Protection: Install finished cabinet units with protective covers during remainder of construction.

I. Finned Tube Radiation:
1. Locate on walls and run cover wall-to-wall unless otherwise indicated. Center elements under windows.
2. Where multiple windows occur over units, divide element into equal segments centered under each window.
3. Align cabinet joints with window mullions.
4. Install wall angles where units butt against walls.
5. **Install □ottom of □o□er □ust a□o□e ar□□ite□tural □all □ase□see ar□□ite□tural dra□ings and s□e□ifi□ations for re□uired dimensions**.

J. Unit Heaters:
   1. Hang from building structure, with pipe hangers anchored to building, not from piping.
   2. Mount as high as possible to maintain greatest headroom unless otherwise indicated.

K. Cabinet Unit Heaters:
   1. Install at locations as indicated on Drawings.
   2. Coordinate to assure correct recess size for recessed units.

L. Hydronic Units:
   1. Install with shut-off valve on supply piping and lock-shield balancing valve on return piping.
   2. Where not accessible, extend vent to exterior surface of cabinet for servicing.
   3. For cabinet unit heaters, fan coil units, and unit heaters, manual automatic air vents with stop valve.

3.03 CLEANING

A. After construction is completed, including painting, clean exposed surfaces of units. Vacuum clean coils and inside of cabinets.

B. Touch-up marred or scratched surfaces of factory-finished cabinets, using finish materials furnished by manufacturer.

C. Install new filters.

END OF SECTION

DIVISION 26 00 00
ELECTRICAL
TABLE OF CONTENTS

Section	Title
26 00 50	Basic Electrical Materials and Methods
26 05 19	Low-Voltage Electrical Power Conductors and Cables
26 05 26	Grounding and Bonding for Electrical Systems
26 05 29	Hangers and Supports for Electrical Systems
26 05 33	Raceway and Boxes for Electrical Systems
26 05 34	Floor Boxes for Electrical Systems
26 05 53	Identification for Electrical Systems
26 09 23	Lighting Control Devices
26 24 16	Panelboards
26 27 26	Wiring Devices
26 41 00	Facility Lightning Protection
26 51 00	Interior Lighting
26 70 00	Fire Detection and Alarm

END OF SECTION

SECTION 26 00 50
BASIC ELECTRICAL REQUIREMENTS

PART 1 GENERAL

1.01 RELATED DOCUMENTS

A. This section is a part of the entire set of Contract Documents and shall be coordinated with the applicable provisions of the other parts.

B. The following requirements are intended as clarification of, or additions to the requirements set forth under General Conditions, Supplementary Conditions and Division 1 of these Specifications. Should there be any conflict between these requirements and those in the General Conditions, Supplementary Conditions and Division 1, the Contractor shall make written request for clarification of same by Addendum prior to bid opening or abide by the decision of the Engineer without resource.

1.02 SCOPE OF WORK

A. Description of Work
1. The work to be executed under this Section includes the furnishing of all labor; equipment and incidental services required to complete and leave ready for operation, the equipment and systems as indicated on the drawings and hereinafter specified. All material, supervision, etc. required for a complete system, will be furnished by this Contractor.
2. Materials and installation methods shall adhere to the provisions of the Americans with Disabilities Act (ADA).

B. Work Specified Elsewhere
1. The Contractor shall review the drawings and specifications of all trades concerning this project to correlate equipment installation and connections.

1.03 DRAWINGS

A. The drawings indicate the location and general arrangement of all electrical work and shall be followed as closely as actual building construction and work of other trades will permit. The Electrical Trades shall examine the drawings of other trades and shall verify the conditions governing his work at the job site. He shall arrange his work accordingly. No changes shall be made without the prior written approval of the Engineer.

B. Field Measurements
1. Verify the dimensions (scaled) governing this work at the building site. No extra compensation will be claimed or allowed on account of differences between actual dimensions and those indicated on the drawings. Examine adjoining work, on which this work is dependent for perfect efficiency and report any work, which must be corrected. No waiver of responsibility for defective work shall be claimed or allowed due to the failure to report unfavorable conditions affecting this work.
2. Generally, the Engineering drawings take precedence in all matters pertaining to the building structure; electrical drawings in all matters pertaining to electrical trades take precedence in electrical installation. However, all conflicts shall be reported to the Engineer for his review.

C. Coordination
1. Before any work is installed, and before any equipment is fabricated or purchased, the Electrical Trades shall carefully check the general drawings, and all other mechanical and electrical drawings, and all job conditions and any lack of coordination between the work and drawings or job conditions shall be immediately reported to the Engineer in writing.

D. Inspection of Site
1. The Electrical Trades shall visit the site, examine and verify the conditions under which his work must be conducted before submitting a bid.

1.04 CODES AND STANDARDS

A. The following documents are a part of this specification and shall indicate minimum safety provisions. All work called for in these specifications and on the plans that exceed minimum safety provisions shall take precedence.
1. Michigan Building Code – latest edition.
2. State Electrical Code.
3. National Fire Protection Association.
4. NESC (National Electric Safety Code).
5. ADA (Americans with Disabilities Act).
6. AEIC (Association of Edison Illuminating Companies).
7. ANSI (American National Standards Institute).
8. ASTM (American Society for Testing and Materials).
9. ICEA (Insulated Cable Engineers Association).
10. IEEE (Institute of Electrical and Electronics Engineers).
11. IES (Illuminating Engineers Society).
12. NEMA (National Electrical Manufacturers Association).
13. NETA (National Electrical Testing Association Inc.).
14. OSHA (Occupational Safety and Health Act).
15. UL (Underwriters Laboratories).

B. Where reference is made to the National Electric Code, the version currently in force in the State of Michigan is to be used.

1.05 MANUFACTURER'S DIRECTIONS

A. Install all equipment in strict accordance with all directions and recommendations furnished by the manufacturer. Where such directions are in conflict with the plans and specifications, report such conflicts to the Engineer who shall make such compromises, as he deems necessary and desirable.

1.06 EXISTING ELECTRICAL, COMMUNICATION, EQUIPMENT AND DISTRIBUTION SYSTEMS

A. Carefully examine the drawings and specifications, visit the project site, and be fully informed as to all existing conditions, dimensions and limitations before starting the work.

B. Notify all authorities having jurisdiction over conduits, wires, pipes or other equipment, which are not needed or which interfere in any manner with the execution of this work, to remove or protect such systems or equipment as required.

C. If existing active or non-active systems (which are not indicated on plans) are encountered that require relocation or disconnecting, make written request for decision on proper handling of these systems, and do not proceed with the work until so authorized by the Engineer. Contractor shall visit the site and verify site conditions on existing services.

1.07 CUTTING AND PATCHING

A. No cutting shall be done which is likely to impair the strength of the building.

B. All openings in walls, ceilings, or floors required by the Contractor shall be in accordance with Division 1.

C. All measures necessary for the proper installation of materials or apparatus shall be taken in the field, and cutting and patching shall be provided where necessary.

D. Where such cutting becomes necessary, employ the trade, which installed the work originally to do the cutting and to restore such cutwork and close openings. Before any cutting or drilling of holes is attempted, notify the Engineer for approval.

1.08 SUBMITTALS

A. Submittals for review, except color samples, shall be made to the engineer in pdf electronic format. The engineer will add his review stamp to the electronic format and return it to the contractor for his records.

B. Submittals for review shall be made prior to the purchase of materials. Submittal procedures shall be in accordance with Division 1 of these specifications, and the following:
   1. Submit copes for distribution with product data grouped to include complete submittals of related system, products, and accessories in a single submittal. Each submittal shall be clearly marked to indicate equipment number, specification section, etc., which the submittal describes.
   2. Mark dimensions and values in units to match those specified.

3. Data must include job name, dimensions, capacities, construction characteristics, and installation instruction. Where applicable, submittal data must also include metal gauges, frame types, finish fan diameters, bearing types, lubrication system, motor types, insulation, velocities, pressure drops, pump curves, coil areas, filter types and areas, electrical characteristics, wiring and piping diagrams, and accessories required.
4. Submittals must be thoroughly checked by the Contractor and must contain his stamp of approval before being sent to the Design Professional for review.
5. Submittals not conforming to the above requirements will be returned without review.

C. The Design Professional will **re□ie□** shop drawings for general conformance to the construction documents. This **re□ie□** is provided as a convenience to the Contractor by the Design Professional. The Design Professional will **re□ie□** submitted information with reasonable care, however, no responsibility accrues to the Design Professional for errors of omission in the **re□ie□** of submitted materials. The Contractor retains complete, sole responsibility for providing materials and equipment that are in conformance to the construction documents.

D. Final “As-Built” drawings shall be submitted by the contractor in AutoCAD format. The design professional will, upon request, provide the AutoCAD design drawings for the Contractor’s use. The Contractor shall modify the design drawings as necessary to accurately reflect the actual installation for this project.

1.09 OPERATIONS AND MAINTENANCE DATA

A. Refer to General Requirements – Project Closeout, for procedures and requirements for preparation and submittal of material manuals.

B. In addition to the information required by Division 1 for maintenance data, include the following information:
1. Provide indicated number of sets of operating/maintenance manuals.
2. Description of function, normal operating characteristics and limitations, performance curves, engineering data and tests, and complete nomenclature and commercial numbers of all replaceable parts.
3. Manufacturer’s printed operation procedures to include start-up, break-in, routine and normal operating instructions; regulations, control, stopping, shut-down, and emergency instructions.
4. Maintenance procedures for routine preventative maintenance and trouble-shooting; disassembly, repair, and reassembly; aligning and adjusting instructions.
5. Servicing instructions and lubrication charts and schedules.

1.10 TEMPORARY POWER

A. Provide temporary power and lighting as required for all trades for this project. Include temporary power service from the utility. Pay all costs associated with temporary power as a part of the base bid for the project.

PART 2 MATERIALS

2.01 BASIC MATERIALS AND METHODS:

A. In all instances where drawings or specifications indicate materials or methods of higher quality than the required minimum by the referenced codes, the drawings and specification shall govern. All electrical equipment shall be UL listed (or equal testing agency) where applicable.

2.02 PENETRATIONS OF ROOFING

A. Penetrations by conduits, electrical equipment supports or other work of this trade, shall be run through prefabricated equipment supports having special fabricated flashing. The appropriate trade shall do this work and the Electrical Contractor shall coordinate same.

2.03 FIRE-STOPPING

A. DEFINITIONS
1. Fire-stopping (Through-Penetration Protection System): Sealing or stuffing material or assembly placed in spaces between and penetrations through building materials to arrest movement of fire, smoke, heat, and hot gases through fire rated construction.

B. SYSTEM DESCRIPTION
1. Fire-stopping Materials: ASTM E119 to achieve fire ratings as noted on Drawings for adjacent construction, but not less than 1 hour fire rating.
   a. Fire-stopping Materials: ASTM E119, to achieve fire ratings of adjacent construction.
   b. Fire-stop interruptions to fire rated assemblies, materials, and components.

C. QUALITY ASSURANCE
1. Through Penetration Fire-stopping of Fire Rated Assemblies: UL 1479 or ASTM E814 with 0.10 inch water gage minimum positive pressure differential to achieve fire F-Ratings and temperature T-Ratings as indicated on Drawings, but not less than 1-hour.
2. Through Penetration Fire-stopping of Non-Fire Rated Floor and Roof Assemblies: Materials to resist free passage of flame and products of combustion.
   a. Noncombustible Penetrating Items: Noncombustible materials for penetrating items connecting maximum of three stories.
   b. Penetrating Items: Materials approved by authorities having jurisdiction for penetrating items connecting maximum of two stories.
3. Surface Burning Characteristics: Maximum 25 flame spread/smoke developed index when tested in accordance with ASTM E84.

D. ENVIRONMENTAL REQUIREMENTS
1. Apply fire-stopping materials only when temperature of substrate material and ambient air is in accordance with the manufacturer's recommendations..
2. Maintain recommended temperatures for recommended periods of time before, during, and after installation of fire-stopping materials.
3. Provide ventilation in areas to receive solvent cured materials as recommended by the manufacturer.

E. PERFORMANCE REQUIREMENTS
1. Fire-stopping: Conform to applicable codes for fire resistance ratings and surface burning characteristics.
2. Fire-stopping: Provide certificate of compliance from authority having jurisdiction indicating approval of materials used.

F. Product Description: Different types of products by multiple manufacturers are acceptable as required to meet specified system description and performance requirements; provide only one type for each similar application.
1. Silicone Fire-stopping Elastomeric Fire-stopping: Single component silicone elastomeric compound and compatible silicone sealant.
2. Foam Fire-stopping Compounds: Single component foam compound.
3. Formulated Fire-stopping Compound of Incombustible Fibers: Formulated compound mixed with incombustible non-asbestos fibers.
4. Fiber Stuffing and Sealant Fire-stopping: Composite of mineral fiber stuffing insulation with silicone elastomer for smoke stopping.
5. Mechanical Fire-stopping Device with Fillers: Mechanical device with incombustible fillers and silicone elastomer, covered with sheet stainless steel jacket, joined with collars, penetration sealed with flanged stops.
6. Intumescent Fire-stopping: Intumescent putty compound which expands on exposure to surface heat gain.
7. Fire-stop Pillows: Formed mineral fiber pillows.
8. Color: As selected from manufacturer's full range of colors.

G. FIRE-STOPPING ACCESSORIES
1. Primer: Type recommended by fire-stopping manufacturer for specific substrate surfaces and suitable for required fire ratings.
2. Dam Material: Permanent:
   a. Mineral fiberboard.
3. Installation Accessories: Provide clips, collars, fasteners, temporary stops or dams, and other devices required to position and retain materials in place.
4. General:
   a. Furnish UL listed products.
   b. Select products with rating not less than rating of wall or floor being penetrated.

5. Non-Rated Surfaces:
   a. Stamped steel, chrome plated, hinged, split ring escutcheons or floor plates or ceiling plates for covering openings in occupied areas where conduit is exposed.
   b. For exterior wall openings below grade, furnish modular mechanical type seal consisting of interlocking synthetic rubber links shaped to continuously fill annular space between conduit and cored opening or water-stop type wall sleeve.

PART 3 EXECUTION

3.01 COORDINATION

A. Many areas of this building will have limited ceiling space available for the installation of all trades work. The Electrical Contractor shall carefully coordinate the installation of his work with all other trades before any fabrication or installation of materials takes place.

B. Provide to the Mechanical Contractor a list of the power characteristics that will be available at each item of his equipment (a note that says “as specified” is not acceptable). No electrical work associated with connection to equipment provided by others until the required information has been properly coordinated between the Contractors.

C. Review the lighting plans against the Architectural reflected ceiling plans and report any discrepancies to the Design Professional before materials are ordered.

D. Review the power plans against the final furniture plans before rough-in, and report any discrepancies to the Design Professional.

3.02 CONDITIONS OF COMPLETION

A. As conditions for the final inspection by the engineer and final payment, the Electrical Contractor shall turn over the following items to the Owner:
   1. All panel and cabinet keys, spare parts, operating instructions, maintenance instructions, schematics, wiring diagrams, etc.
   2. A certificate of final inspection indicating approval by the inspecting authority.
   3. Operating and maintenance manuals.
   4. Final as-built record drawings provided per requirements as follows:
      a. Electronic file on CD, AutoCAD 2005, or later.

3.03 PAINTING

A. The Electrical Contractor shall cooperate with the Architectural Trade responsible for painting and identifying all exposed electrical equipment in finished areas. Care shall be taken to insure that all nameplates of electrical equipment shall not be painted.

B. The Contractor shall paint or touch-up any electrical equipment damaged or scratched in handling or installation or shipping from the factory

3.04 GUARANTEE

A. Provide general guarantee for one (1) year on all labor and material in approved form. Provide and special guarantees as required under the sections of the specification. Refer to guarantee requirements in General Conditions.

3.05 PERMITS

A. The Contractor shall secure and pay for all permits and inspections required for the electrical work. All permits and certificates of inspection, approval signed by the controlling building department, shall be furnished in duplicate to the Engineer and shall become the property of the Owner. The Contractor shall pay any fees and inspection costs.

3.06 ELECTRICAL REQUIREMENTS

A. The electrical characteristics available for each item of Mechanical equipment shall be confirmed with the project Mechanical Contractor before the equipment is ordered.

3.07 FINAL ADJUSTING

A. Adjust operating products and equipment to ensure smooth and unhindered operation.

3.08 FINAL CLEANING

A. Execute final cleaning prior to final inspection.

B. Clean interior and exterior surfaces exposed to view. Vacuum carpeted and soft surfaces where materials have been deposited due to work of this Contractor.

C. Clean debris from site.

D. Remove waste and surplus materials, rubbish, and construction facilities from the site.

3.09 PROGRESS CLEANING

A. Maintain work areas free of waste materials, debris, and rubbish. Maintain site in a clean and orderly condition at all times.

B. All openings in conduit systems shall be protected during construction to prevent the entrance of foreign materials.

3.10 REMOVAL OF TEMPORARY UTILITIES, FACILITIES, AND CONTROLS

A. Remove temporary equipment, facilities, and materials prior to Substantial Completion.

B. Clean and repair damage caused by installation or use of temporary work.

3.11 RIGGING, HOISTING, AND HANDLING

A. Provide all rigging and hoisting necessary for the installation of the materials and equipment provided under this Division of work. Handle all materials in accordance with manufacturer's instructions.

3.12 DAMAGE TO OTHER WORK

A. This Contractor will be held responsible for damage to work caused by his work or through the negligence of his workman. The trade, which originally installed the work, as directed by the Engineer will do all patching and repairing of damaged work, but the cost of same shall be paid by this Contractor.

3.13 INSPECTION AND TESTS

A. Authorized representatives of the Engineer shall have access to and the privilege of inspecting all work and materials as the work progresses. These representatives will have authority to approve or reject any work with the drawings, installation instructions, specifications, codes, and good engineering practice as a basis for any actions taken.

B. Circuits shall be phased out and connected to the panels in proper manner before equipment is energized. Loads shall be distributed as evenly as possible on all phases. All wires shall be entirely free from grounds and short circuits.

C. Refer to additional testing/adjusting to meet requirements specified within Division 16.

END OF SECTION

SECTION 26 05 1

LOW-VOLTAGE ELECTRICAL POWER CONDUCTORS AND CABLES

PART 1 GENERAL

1.01 SUMMARY

A. Section includes:
1. Building wire and cable.
2. Nonmetallic-sheathed cable.
3. Direct burial cable.
4. Service entrance cable.
5. Armored cable.
6. Metal clad cable.
7. Wiring connectors and connections.

1.02 DESIGN REQUIREMENTS

A. Conductor sizes shown on the plans, or in the specifications, are based on copper.

B. The base bid for this project shall be based on copper conductors throughout. The Contractor, at his option, may submit a voluntary alternate with his bid noting the change in price offered using aluminum conductors in lieu of copper.

1.03 SUBMITTALS

A. Submit in accordance with the requirements of Division 1, Section 26 00 50, and this section.

B. Product Data: Submit for building wire and each cable assembly type.

C. Design Data: Indicate voltage drop and ampacity calculations for aluminum conductors substituted for copper conductors.

D. Test Reports: Indicate procedures and values obtained.

E. Project Record Documents: Record actual locations of components and circuits.

1.04 QUALITY ASSURANCE

A. Wiring materials located in air handling plenums shall conform to the following:
1. Peak optical density not greater than 0.5.
2. Average optical density not greater than 0.15.
3. Flame spread not greater than 5 feet when tested in accordance with NFPA 262.

1.05 FIELD MEASUREMENTS

A. Verify field measurements are as indicated on Drawings.

1.06 COORDINATION

A. Where wire and cable destination is indicated and routing is not shown, determine routing and lengths required.

B. Wire and cable routing indicated is approximate unless dimensioned.

PART 2 PRODUCTS

A. BUILDING WIRE
   1. Provide products as follows:
      a. Stranded conductor for feeders and branch circuits 10 AWG and smaller.
      b. Stranded conductors for control circuits.
      c. Conductor not smaller than 12 AWG for power and lighting circuits.
      d. Conductor not smaller than 14 AWG for control circuits.
      e. Increase wire size in branch circuits to limit voltage drop to a maximum of 3 percent.

B. Product Description: Single conductor insulated wire.

C. Conductor: Copper.

D. Insulation Voltage Rating: 600 volts.

E. Insulation Temperature Rating: 60 degrees C.

F. Insulation Material: Thermoplastic.

2.02 NONMETALLIC-SHEATHED CABLE

A. Conductor: Copper.

B. Insulation Voltage Rating: 600 volts.

2.03 DIRECT BURIAL CABLE

A. Conductor: Copper.

B. Insulation Voltage Rating: 600 volts.

C. Insulation Temperature Rating: 90 degrees C.

2.04 SERVICE ENTRANCE CABLE

A. Conductor: Copper.

B. Insulation Voltage Rating: 600 volts.

C. Insulation: Type USE.

2.05 ARMORED CABLE

A. Conductor: Copper.

B. Insulation Voltage Rating: 600 volts.

C. Insulation Temperature Rating: 60 degrees C.

D. Insulation Material: Thermoplastic.

E. Armor Material: Steel.

F. Armor Design: Interlocked metal tape.

2.06 METAL CLAD CABLE

A. Conductor: Copper.

B. Insulation Voltage Rating: 600 volts.

C. Insulation Temperature Rating: 60 degrees C.

D. Insulation Material: Thermoplastic.

E. Armor Material: Steel.

F. Armor Design: Interlocked metal tape.

G. Jacket: None.

2.07 TRAY CABLE

A. Product Description: Multi-conductor power and control cable NFPA 70 Type TC.

B. Conductor: Copper.

C. Insulation: Flame-retardant cross-linked polyethylene.

D. Overall Jacket: Polyvinyl Chlorine (PVC) in accordance with UL 1277.

E. Insulation Voltage Rating: 600 volts.

F. Insulation Temperature Rating: 90 degrees C.

G. Listings: Finished cable UL listed as Type TC, and sunlight resistant.

2.08 WIRING CONNECTORS

A. Split Bolt Connectors:

B. Solder-less Pressure Connectors:

C. Spring Wire Connectors:

D. Compression Connectors:

2.09 TERMINATIONS

A. Terminal Lugs for Wires 6 AWG and Smaller: Solder-less, compression type copper.

B. Lugs for Wires 4 AWG and Larger: Color keyed, compression type copper, with insulating sealing collars.

PART 3 EXECUTION

3.01 EXAMINATION

A. Verify interior of building has been protected from weather.

B. Verify mechanical work likely to damage wire and cable has been completed.

C. Verify raceway installation is complete and supported.

3.02 PREPARATION

A. Completely and thoroughly swab raceway before installing wire.

3.03 EXISTING WORK

A. Remove exposed abandoned wire and cable, including abandoned wire and cable above ceilings where new work is to take place. Patch surfaces where removed cables pass through building finishes.

B. Disconnect abandoned circuits and remove circuit wire and cable. Remove abandoned boxes when wire and cable servicing boxes is abandoned and removed. Install blank cover for abandoned boxes not removed.

C. Provide access to existing wiring connections remaining active and requiring access. Modify installation or install access panel.

D. Extend existing circuits using materials and methods compatible with existing electrical installations, and as specified.

E. Clean and repair existing wire and cable remaining or wire and cable to be reinstalled.

3.04 SYSTEM DESCRIPTION

A. Wiring Methods: Provide the following wiring methods:
   1. Concealed Interior Locations: Building wire, Type THHN/THWN insulation, in raceway.
   2. Exposed Interior Locations: Building wire, Type THHN/THWN insulation, in raceway.

3. Exterior, Above Grade Locations: Building wire, Type THHN/THWN insulation, in raceway.
4. Underground Locations: Building wire, Type THHN/THWN insulation, in raceway.
5. Cable Tray Locations: Tray cable Type TC.

3.05 INSTALLATION

A. Route wire and cable to meet Project conditions.

B. Neatly train and lace wiring inside boxes, equipment, and panelboards.

C. Identify and color code wire and cable under provisions of Section 26 05 53. Identify each conductor with its circuit number or other designation indicated.

D. Special Techniques - Building Wire in Raceway:
1. Pull conductors into raceway at same time.
2. Install building wire 4 AWG and larger with pulling equipment.

E. Special Techniques - Cable:
1. Protect exposed cable from damage.
2. Support cables above accessible ceiling, using spring metal clips or [metal] [plastic] cable ties to support cables from structure [or ceiling suspension system]. Do not rest cable on ceiling panels.
3. Use suitable cable fittings and connectors.

F. Special Techniques - Direct Burial Cable:
1. Trench and backfill for direct burial cable installation. Install warning tape along entire length of direct burial cable, within 3 inches of grade.
2. Use suitable direct burial cable fittings and connectors.

G. Special Techniques - Wiring Connections:
1. Clean conductor surfaces before installing lugs and connectors.
2. Make splices, taps, and terminations to carry full ampacity of conductors with no perceptible temperature rise.
3. Tape un-insulated conductors and connectors with electrical tape to 150 percent of insulation rating of conductor.
4. Install split bolt connectors for copper conductor splices and taps, 6 AWG and larger.
5. Install solder-less pressure connectors with insulating covers for copper conductor splices and taps, 8 AWG and smaller.
6. Install insulated spring wire connectors with plastic caps for copper conductor splices and taps, 10 AWG and smaller.
7. Install suitable reducing connectors or mechanical connector adaptors for connecting aluminum conductors to copper conductors.

H. Install stranded conductors for branch circuits 10 AWG and smaller. Install crimp on fork terminals for device terminations. Do not place bare stranded conductors directly under screws.

I. Install terminal lugs on ends of 600 volt wires unless lugs are furnished on connected device, such as circuit breakers.

J. Size lugs in accordance with manufacturer's recommendations terminating wire sizes. Install 2-hole type lugs to connect wires 4 AWG and larger to copper bus bars.

K. For terminal lugs fastened together such as on motors, transformers, and other apparatus, or when space between studs is small enough that lugs can turn and touch each other, insulate for dielectric strength of 2-1/2 times normal potential of circuit.

3.06 WIRE COLOR

A. General: Match color standard already in use, or:
   1. For all wire sizes, install wire colors in accordance with the following:
      a. Black and red for single phase circuits at 120/240 volts.
      b. Black, red, and blue for circuits at 120/208 volts single or three phase.
      c. Orange, brown, and yellow for circuits at 277/480 volts single or three phase.

B. Neutral Conductors: White. When two or more neutrals are located in one conduit, individually identify each with proper circuit number.

C. Branch Circuit Conductors: Install three or four wire home runs with each phase uniquely color coded.

D. Feeder Circuit Conductors: Uniquely color code each phase.

E. Ground Conductors:
   1. For 6 AWG and smaller: Green.
   2. For 4 AWG and larger: Identify with green tape at both ends and visible points including junction boxes.

3.07 FIELD QUALITY CONTROL

A. Inspect and test in accordance with NETA ATS, except Section 4.

B. Perform inspections and tests listed in NETA ATS, Section 7.3.1.

END OF SECTION

SECTION 26 05 26
GROUNDING AND BONDING FOR ELECTRICAL SYSTEMS

PART 1 GENERAL

1.01 SUMMARY

A. Section Includes:
1. Rod electrodes.
2. Wire.
3. Grounding well components.
4. Mechanical connectors.
5. Exothermic connectors.

1.02 SYSTEM DESCRIPTION

A. Grounding systems use the following elements as grounding electrodes:
1. Metal underground water pipe.
2. Metal building frame.
3. Concrete-encased electrode.
4. Rod electrode.
5. Plate electrode.

1.03 PERFORMANCE REQUIREMENTS

A. Grounding System Resistance: 5 ohms maximum (for all new work).

1.04 SUBMITTALS

A. Submit in accordance with the requirements of Division 1, Section 26 00 50, and this section.

B. Product Data: Submit data on grounding electrodes and connections.

C. Test Reports: Indicate overall resistance to ground and resistance of each electrode.

D. Manufacturer's Installation Instructions: Submit for active electrodes.

E. Project Record Documents: Record actual locations of components and grounding electrodes.

1.05 QUALITY ASSURANCE

A. Provide grounding materials conforming to requirements of NEC, IEEE 142, and UL labeled.

1.06 DELIVERY, STORAGE, AND HANDLING

A. Deliver, store, and handle in accordance with the requirements of Division 1, Section 23 00 50, and this Section.

B. Accept materials on site in original factory packaging, labeled with manufacturer's identification.

C. Protect from weather and construction traffic, dirt, water, chemical, and mechanical damage, by storing in original packaging.

D. Do not deliver items to project before time of installation. Limit shipment of bulk and multiple-use materials to quantities needed for immediate installation.

1.07 COORDINATION

A. Complete grounding and bonding of building reinforcing steel prior to concrete placement.

PART 2 PRODUCTS

2.01 ROD ELECTRODES

A. Product Description:
1. Material: Copper-clad steel.
2. Diameter: 1/2 inch.
3. Length: 10 feet.

B. Connector: Connector for exothermic welded connection.

2.02 WIRE

A. Material: Stranded copper.

B. Foundation Electrodes: 4 AWG.

C. Grounding Electrode Conductor: Copper conductor bare.

D. Bonding Conductor: Copper conductor bare.

2.03 MECHANICAL CONNECTORS

A. Description: Bronze connectors, suitable for grounding and bonding applications, in configurations required for particular installation.

2.04 EXOTHERMIC CONNECTIONS

A. Product Description: Exothermic materials, accessories, and tools for preparing and making permanent field connections between grounding system components.

PART 3 EXECUTION

3.01 EXAMINATION

A. Verify final backfill and compaction has been completed before driving rod electrodes.

3.02 PREPARATION

A. Remove paint, rust, mill oils, and all surface contaminants at connection points.

3.03 EXISTING WORK

A. Modify existing grounding system to maintain continuity to accommodate renovations.

B. Extend existing grounding system using materials and methods compatible with existing electrical installations, and as specified.

3.04 INSTALLATION

A. Install in accordance with IEEE 142.

B. Install rod electrodes as necessary to achieve specified overall resistance to ground.

C. Install all grounding and bonding conductors concealed from view (buried, below floors, above ceiling, within wall construction, etc.).

D. Install 4 AWG bare copper wire in foundation footings.

E. Bond together metal siding not attached to grounded structure; bond to ground.

F. Bond together each metallic raceway, pipe, duct and other metal object entering.

G. Equipment Grounding Conductor: Install separate, insulated conductor within each feeder and branch circuit raceway. Terminate each end on suitable lug, bus, or bushing.

H. Connect to site grounding system.

I. Bond to lightning protection system.

J. Install continuous grounding using underground cold water system and building steel as grounding electrode. Where water piping is not available, install artificial station ground by means of driven rods or buried electrodes.

K. Permanently ground entire light and power system in accordance with NEC, including service equipment, distribution panels, lighting panelboards, switch and starter enclosures, motor frames, grounding type receptacles, and other exposed non-current carrying metal parts of electrical equipment.

L. Install branch circuits feeding isolated ground receptacles with separate insulated grounding conductor, connected only at isolated ground receptacle, ground terminals, and at ground bus of serving panel.

M. Accomplish grounding of electrical system by using insulated grounding conductor installed with feeders and branch circuit conductors in conduits. Size grounding conductors in accordance with NEC. Install from grounding bus of serving panel to ground bus of served panel, grounding screw of receptacles, lighting fixture housing, light switch outlet boxes or metal enclosures of service equipment. Ground conduits by means of grounding bushings on terminations at panelboards with installed number 12 conductor to grounding bus.

N. Grounding electrical system using continuous metal raceway system enclosing circuit conductors in accordance with NEC.

O. Permanently attach equipment and grounding conductors prior to energizing equipment.

3.05 FIELD QUALITY CONTROL

A. Inspect and test in accordance with NETA ATS, except Section 4.

B. Grounding and Bonding: Perform inspections and tests listed in NETA ATS, Section 7.13.

C. Perform ground resistance testing in accordance with IEEE 142.

D. Perform leakage current tests in accordance with NFPA 99.

E. Perform continuity testing in accordance with IEEE 142.

F. When improper grounding is found on receptacles, check receptacles in entire project and correct. Perform retest.

END OF SECTION

SECTION 26 05 2

HANGERS AND SUPPORTS FOR ELECTRICAL SYSTEMS

PART 1 GENERAL

1.01 SUMMARY

A. Section Includes:
1. Conduit supports.
2. Formed steel channel.
3. Spring steel clips.
4. Sleeves.
5. Mechanical sleeve seals.
6. Equipment bases and supports.

1.02 SUBMITTALS

A. Submit in accordance with the requirements of Division 1, Section 26 00 50, and this section.

B. Shop Drawings: Indicate system layout with location and detail of trapeze hangers.

C. Product Data:
1. Hangers and Supports: Submit manufacturers catalog data including load capacity.
2. Fire-stopping: Submit data on product characteristics, performance and limitation criteria.

D. Fire-stopping Schedule: Submit schedule of opening locations and sizes, penetrating items, and required listed design numbers to seal openings to maintain fire resistance rating of adjacent assembly.

E. Design Data: Indicate load carrying capacity of hangers and supports.

F. Manufacturer's Installation Instructions:
1. Hangers and Supports: Submit special procedures and assembly of components.
2. Fire-stopping: Submit preparation and installation instructions.

1.03 DELIVERY, STORAGE, AND HANDLING

A. Deliver, store, and handle in accordance with the requirements of Division 1, Section 26 00 50, and this Section.

B. Accept materials on site in original factory packaging, labeled with manufacturer's identification.

C. Protect from weather and construction traffic, dirt, water, chemical, and mechanical damage, by storing in original packaging.

PART 2 PRODUCTS

2.01 CONDUIT SUPPORTS

A. Hanger Rods: Threaded high tensile strength galvanized carbon steel with free running threads.

B. Beam Clamps: Malleable Iron, with tapered hole in base and back to accept either bolt or hanger rod. Set screw: hardened steel.

C. Conduit clamps for trapeze hangers: Galvanized steel, notched to fit trapeze with single bolt to tighten.

D. Conduit clamps - general purpose: One hole, malleable iron for surface mounted conduits.

E. Cable Ties: High strength nylon temperature rated to 185 degrees F. Self locking.

2.02 FORMED STEEL CHANNEL

A. Product Description: Galvanized 12 gage) thick steel. With holes 1-1/2 inches on center.

2.03 SPRING STEEL CLIPS

A. Product Description: Mounting hole and screw closure.

2.04 SLEEVES

A. Sleeves for Non-fire Rated Floors: 18 gage galvanized steel.

B. Sleeves for Non-fire Rated Beams, Walls, Footings, and Potentially Wet Floors: Steel pipe or 18 gage galvanized steel.

C. Sleeves for Fire Rated and Fire Resistive Floors and Walls, and Fire Proofing: Prefabricated fire rated sleeves including seals, UL listed.

2.05 MECHANICAL SLEEVE SEALS

A. Product Description: Modular mechanical type, consisting of interlocking synthetic rubber links shaped to continuously fill annular space between object and sleeve, connected with bolts and pressure plates causing rubber sealing elements to expand when tightened, providing watertight seal and electrical insulation.

2.06 EQUIPMENT BASES AND SUPPORTS

A. Provide housekeeping pads of concrete, minimum 3-1/2 inches thick and extending 6 inches beyond supported equipment.

PART 3 EXECUTION

3.01 EXAMINATION

A. Verify openings are ready to receive sleeves.

3.02 PREPARATION

A. Obtain permission from Architect/Engineer before using powder-actuated anchors.

B. Obtain permission from Architect/Engineer before drilling or cutting structural members.

3.03 INSTALLATION - HANGERS AND SUPPORTS

A. Anchors and Fasteners:
1. Concrete Structural Elements: Provide precast inserts, expansion anchors, powder actuated anchors or preset inserts.
2. Steel Structural Elements: Provide beam clamps, spring steel clips, or welded fasteners.
3. Concrete Surfaces: Provide self-drilling anchors and expansion anchors.
4. Hollow Masonry, Plaster, and Gypsum Board Partitions: Provide toggle bolts or hollow wall fasteners.
5. Solid Masonry Walls: Provide expansion anchors or preset inserts.
6. Sheet Metal: Provide sheet metal screws.
7. Wood Elements: Provide wood screws.

B. Inserts:
1. Install inserts for placement in concrete forms.
2. Install inserts for suspending hangers from reinforced concrete slabs and sides of reinforced concrete beams.
3. Provide hooked rod to concrete reinforcement section for inserts carrying pipe over 4 inches.
4. Where concrete slabs form finished ceiling, locate inserts flush with slab surface.
5. Where inserts are omitted, drill through concrete slab from below and provide through-bolt with recessed square steel plate and nut recessed into and grouted flush with slab.

C. Install conduit and raceway support and spacing in accordance with NEC.

D. Do not fasten supports to pipes, ducts, mechanical equipment, or conduit.

E. Install multiple conduit runs on common hangers.

F. Supports:
   1. Fabricate supports from structural steel or formed steel channel. Install hexagon head bolts to present neat appearance with adequate strength and rigidity. Install spring lock washers under nuts.
   2. Install surface mounted cabinets and panelboards with minimum of four anchors.
   3. In wet and damp locations install steel channel supports to stand cabinets and panelboards 1 inch off wall.
   4. Support vertical conduit at every floor.

3.04 INSTALLATION - SLEEVES

A. Exterior watertight entries: Seal with adjustable interlocking rubber links.

B. Conduit penetrations not required to be watertight: Sleeve and fill with silicon foam.

C. Set sleeves in position in forms. Provide reinforcing around sleeves.

D. Size sleeves large enough to allow for movement due to expansion and contraction. Provide for continuous insulation wrapping.

E. Extend sleeves through floors 1 inch above finished floor level. Caulk sleeves.

F. Where conduit or raceway penetrates floor, ceiling, or wall, close off space between conduit or raceway and adjacent work with stuffing insulation and caulk. Provide close fitting metal collar or escutcheon covers at both sides of penetration.

G. Install chrome plated steel escutcheons at penetrations of finished surfaces.

3.05 INSTALLATION - EQUIPMENT BASES AND SUPPORTS

A. Using templates furnished with equipment, install anchor bolts, and accessories for mounting and anchoring equipment.

B. Construct supports of steel members. Brace and fasten with flanges bolted to structure.

3.06 PROTECTION OF FINISHED WORK

A. Protect adjacent surfaces from damage by material installation.

END OF SECTION

SECTION 26 05 33
RACEWAY AND BOXES FOR ELECTRICAL SYSTEMS

PART 1 GENERAL

1.01 SUMMARY

A. Section includes:
1. Conduit and tubing.
2. Surface raceways.
3. Wireway.
4. Outlet boxes.
5. Pull and junction boxes.
6. Handholes.

1.02 SYSTEM DESCRIPTION

A. Raceway and boxes located as indicated on Drawings, and at other locations required for splices, taps, wire pulling, equipment connections, and compliance with regulatory requirements. Raceway and boxes are shown in approximate locations unless dimensioned. Provide raceway to complete wiring system.

B. Minimum Raceway Size: 1/2 inch unless otherwise specified.

1.03 SUBMITTALS

A. Submit in accordance with the requirements of Division 1, Section 26 00 50, and this section.

B. Product Data: Submit for the following:
1. Conduit.
2. Raceway fittings.
3. Surface raceway.
4. Wireway.
5. Pull and junction boxes.
6. Handholes.

C. Manufacturer's Installation Instructions: Submit application conditions and limitations of use stipulated by Product testing agency specified under Regulatory Requirements. Include instructions for storage, handling, protection, examination, preparation, and installation of Product.

D. Project Record Documents:
1. Record actual routing of conduits 2 inches and larger.
2. Record actual locations and mounting heights of outlet, pull, and junction boxes.

1.04 DELIVERY, STORAGE, AND HANDLING

A. Deliver, store, and handle in accordance with the requirements of Division 1, Section 26 00 50, and this Section.

B. Protect conduit from corrosion and entrance of debris by storing above grade. Provide appropriate covering.

C. Protect PVC conduit from sunlight.

1.05 COORDINATION

A. Coordinate mounting heights, orientation and locations of outlets with all features of other systems including, but not limited to: Cabinets, counter heights, backsplash heights, finned tube, mirrors, etc.

PART 2 PRODUCTS

2.01 METAL CONDUIT

A. Rigid Steel Conduit: ANSI C80.1.

B. Rigid Aluminum Conduit: ANSI C80.5.

C. Intermediate Metal Conduit (IMC): Rigid steel.

D. Fittings and Conduit Bodies: NEMA FB 1; material to match conduit.

2.02 PVC COATED METAL CONDUIT

A. Product Description: NEMA RN 1; rigid steel conduit with external PVC coating, 20 mil thick.

B. Fittings and Conduit Bodies: NEMA FB 1; steel fittings with external PVC coating to match conduit.

2.03 FLEXIBLE METAL CONDUIT

A. Product Description: Interlocked steel construction.

B. Fittings: NEMA FB 1.

2.04 LIQUIDTIGHT FLEXIBLE METAL CONDUIT

A. Product Description: Interlocked steel construction with PVC jacket.

B. Fittings: NEMA FB 1.

2.05 ELECTRICAL METALLIC TUBING (EMT)

A. Product Description: ANSI C80.3; galvanized tubing.

B. Fittings and Conduit Bodies: NEMA FB 1; steel, compression type.

2.06 NONMETALLIC CONDUIT

A. Product Description: NEMA TC 2; Schedule 40 PVC.

B. Fittings and Conduit Bodies: NEMA TC 3.

2.07 NONMETALLIC TUBING

A. Product Description: NEMA TC 2.

B. Fittings and Conduit Bodies: NEMA TC 3.

2.08 CONDUIT APPLICATION

A. Underground: Provide PVC conduit. Provide nonmetallic handhole.

B. Outdoor Exposed Locations: Provide rigid aluminum conduit. Provide cast metal outlet, pull, and junction boxes.

C. Interior Wet and Damp Locations: Provide electrical metallic tubing. Provide cast metal outlet, junction, and pull boxes. Provide flush mounting outlet box in finished areas.

D. Interior Concealed Dry Locations: Provide electrical metallic tubing. Provide sheet-metal boxes. Provide flush mounting outlet box in finished areas. Provide hinged enclosure for large pull boxes.

E. Exposed Dry Locations: Provide electrical metallic tubing. Provide sheet-metal boxes. Provide flush mounting outlet box in finished areas. Provide hinged enclosure for large pull boxes.

2.09 SURFACE METAL RACEWAY

A. Product Description: Sheet metal channel with fitted cover, suitable for use as surface metal raceway.

B. Size: See Plans.

C. Finish: Manufacturer’s standard enamel color.

D. Fittings, Boxes, and Extension Rings: Furnish manufacturer's standard accessories; match finish on raceway.

2.10 WIREWAY

A. Product Description: General purpose, weatherproof where installed outside.

B. Knockouts: Manufacturer's standard, and as required by the installations.

C. Size: As required by the installation with 100% excess capacity.

D. Cover: Hinged cover.

E. Connector: Slip-in.

F. Fittings: Lay-in type with removable top, bottom, and side; captive screws.

G. Finish: Rust inhibiting primer coating with manufacturer's standard enamel finish.

2.11 OUTLET BOXES

A. Sheet Metal Outlet Boxes: NEMA OS 1, galvanized steel.
   1. Luminaire and Equipment Supporting Boxes: Rated for weight of equipment supported; furnish 1/2 inch male fixture studs where required.
   2. Concrete Ceiling Boxes: Concrete type.

B. Cast Boxes: NEMA FB 1, Type FD, aluminum. Furnish gasketed cover by box manufacturer.

C. Wall Plates for Unfinished Areas: Furnish gasketed cover.

2.12 PULL AND JUNCTION BOXES

A. Sheet Metal Boxes: NEMA OS 1, galvanized steel.

B. Surface Mounted Cast Metal Box: NEMA 250, Type 4; flat-flanged, surface mounted junction box:
   1. Material: Galvanized cast iron.
   2. Cover: Furnish with ground flange, neoprene gasket, and stainless steel cover screws.

C. In-Ground Cast Metal Box: NEMA 250, Type 6, outside flanged, recessed cover box for flush mounting:
   1. Material: Galvanized cast iron.
   2. Cover: Nonskid cover with neoprene gasket and stainless steel cover screws.
   3. Cover Legend: "ELECTRIC".

D. Fiberglass Handholes: Die-molded, glass-fiber hand holes:
   1. Cable Entrance: Pre-cut 6 inch x 6 inch cable entrance at center bottom of each side.
   2. Cover: Glass-fiber, weatherproof cover with nonskid finish.

PART 3 EXECUTION

3.01 CORRDINATION

A. Participate in coordination meetings with all other trades to establish routing that does not interfere with the work of other trades. Said coordination shall precede any installation of materials.

B. It is intended that all raceway and boxes be concealed in the project work area, unless specifically noted to the contrary on the Plans. Surface mounted metal raceway is only acceptable for existing walls that are to remain in place, and then, only as specifically noted on the Plans.

3.02 EXAMINATION

A. Verify outlet locations and routing and termination locations of raceway prior to rough-in. Verification shall include, but not be limited to: Review final furniture layouts, initiate a meeting to include the Owner and Architect / Engineer to review proposed receptacle locations.

3.03 EXISTING WORK

A. Remove exposed abandoned raceway, including abandoned raceway above ceilings in the project work area. Cut raceway flush with walls and floors, and patch surfaces.

B. Remove concealed abandoned raceway to its source, including conditions where the subject raceway extends beyond the new work area.

C. Disconnect abandoned outlets and remove devices. Remove abandoned outlets when raceway is abandoned and removed. Install blank cover for abandoned outlets not removed (where the existing wall is to remain in place).

D. Maintain access to existing boxes and other installations remaining active and requiring access. Modify installation or provide access panel.

E. Extend existing raceway and box installations using materials and methods compatible with existing electrical installations, and as specified.

F. Clean and repair existing raceway and boxes to remain or to be reinstalled.

3.04 INSTALLATION – GENERAL

A. Ground and bond raceway and boxes as required by code, and as required by the contract documents.

B. Fasten raceway and box supports to structure and finishes in accordance with code, and as required by the contract documents.

C. Identify raceway and boxes in accordance with Section 26 05 53.

D. Arrange raceway and boxes to maintain maximum headroom and present neat appearance.

3.05 INSTALLATION - RACEWAY

A. Raceway routing is shown in approximate locations unless dimensioned. Route to complete wiring system. Coordinate location of all raceway before installation begins.

B. Arrange raceway supports to prevent misalignment during wiring installation.

C. Support raceway using coated steel or malleable iron straps, lay-in adjustable hangers, clevis hangers, and split hangers.

D. Group related raceway; support using conduit rack. Construct rack using steel channel; provide space on each for 25 percent additional raceways.

E. Do not support raceway with wire or perforated pipe straps. Remove wire used for temporary supports

F. Do not attach raceway to ceiling support wires or other piping systems.

G. Construct wireway supports from steel channel.

H. Route exposed raceway parallel and perpendicular to walls.

I. Route raceway installed above accessible ceilings parallel and perpendicular to walls.

J. Route conduit under slab from point-to-point.

K. Do not install raceway within concrete floor slab.

L. Maintain clearance between raceway and piping for maintenance purposes.

M. Maintain 12 inch clearance between raceway and surfaces with temperatures exceeding 104 degrees F.

N. Bring conduit to shoulder of fittings; fasten securely.

O. Install conduit hubs or sealing locknuts to fasten conduit to sheet metal boxes in damp and wet locations and to cast boxes.

P. Install no more than equivalent of three 90 degree bends between boxes. Install conduit bodies to make sharp changes in direction, as around beams. Install factory elbows for bends in metal conduit larger than 2 inch size.

Q. Avoid moisture traps; install junction box with drain fitting at low points in conduit system.

R. Install fittings to accommodate expansion and deflection where raceway crosses control and expansion joints.

S. Install suitable pull string or cord in each empty raceway except sleeves and nipples.

T. Install suitable caps to protect installed conduit against entrance of dirt and moisture.

U. Surface Raceway: Install flat-head screws, clips, and straps to fasten raceway channel to surfaces; mount plumb and level. Install insulating bushings and inserts at connections to outlets and corner fittings.

V. Close ends and unused openings in wireway.

3.06 INSTALLATION - BOXES

A. All boxes shall be installed plumb, and flush with the surface in which they are installed.

B. Install wall mounted boxes at elevations to accommodate mounting heights required by Code and as indicated on Drawings.

C. Orient boxes to accommodate wiring devices oriented as specified elsewhere.

D. Install pull boxes and junction boxes above accessible ceilings and in unfinished areas only.

E. In Accessible Ceiling Areas: Install outlet and junction boxes no more than 6 inches from ceiling access panel or from removable recessed luminaire.

F. Coordinate masonry cutting to achieve neat opening.

G. Install boxes serving rooms on opposite sides of a common wall with a minimum of 6 inches separation. Where the wall construction includes sound attenuation, increase the minimum separation to 24 inches. Do not install boxes back to back.

H. Secure flush mounting box to interior wall and partition studs. Accurately position to allow for surface finish thickness.

I. Install stamped steel bridges to fasten flush mounting outlet box between studs.

J. Install flush mounting box without damaging wall insulation or reducing its effectiveness.

K. Install adjustable steel channel fasteners for hung ceiling outlet box.

L. Do not fasten boxes to ceiling support wires or other piping systems.

M. Support boxes independently of conduit.

N. Install gang box where more than one device is mounted together. Do not use sectional box.

O. Install gang box with plaster ring for single device outlets.

3.07 INTERFACE WITH OTHER PRODUCTS

A. Install conduit to preserve all fire resistance ratings indicated on the plans.

B. Where conduits penetrate the roof, provide Pate Pipe Curb (or similar). Pitch pockets are not acceptable.

C. Locate outlet boxes to allow luminaires positioned as indicated on Drawings (including the reflected ceiling plan).

D. Align adjacent wall mounted outlet boxes for switches, thermostats, and similar devices.

3.08 ADJUSTING

A. Adjust flush-mounting outlets to make front plumb, and flush with finished wall material.

B. Install knockout closures in unused openings in boxes.

3.09 CLEANING

A. Clean interior of boxes to remove dust, debris, and other material.

B. Clean exposed surfaces and restore finish.

END OF SECTION

SECTION 26 05 34
FLOOR BOXES FOR ELECTRICAL SYSTEMS

PART 1 GENERAL

1.01 SUMMARY

A. Section includes:
1. Floor boxes.
2. Poke-through fittings.

1.02 SUBMITTALS

A. Submit in accordance with the requirements of Division 1, Section 26 00 50, and this section.

B. Product Data: Submit catalog data for floor boxes service fittings.

C. Samples: Submit two of each service fitting illustrating size, material, configuration, and finish.

D. Project Record Documents: Record actual locations of each floor box and poke-through fitting.

PART 2 PRODUCTS

2.01 FLOOR BOXES

A. Floor Boxes: NEMA OS 1, 1-1/2 inches deep.

B. Adjustability: Fully adjustable.

C. Material: Cast metal.

D. Shape: See Schedule on the Plans.

2.02 POKE-THROUGH FITTINGS

A. Product Description: Assembly comprising service fitting, poke-through component, fire stops and smoke barriers, and junction box for conduit termination.

B. Fire Rating: As required by the assembly rating.

C. Service Fitting Type: Flush.

D. Housing: Satin aluminum.

E. Device Plate: Stainless steel.

F. Configuration: One duplex and one communications outlet.

PART 3 EXECUTION

3.01 EXAMINATION

A. Verify locations of floor boxes and outlets prior to rough-in.

3.02 EXISTING WORK

A. Disconnect abandoned service fitting devices and remove service fittings. Install blank cover for abandoned floor boxes not removed.

B. Maintain access to existing floor boxes remaining active and requiring access. Modify installation or provide access panel.

C. Extend existing service fitting installations using materials and methods compatible with existing electrical installations, and as specified.

D. Clean and repair existing service fittings to remain or to be reinstalled.

3.03 INSTALLATION

A. Boxes and fittings are indicated on Drawings in approximate locations unless dimensioned. Confirm actual required location before rough-in.

B. Floor Box Requirements: Use cast floor boxes for installations in slab on grade; formed steel boxes are acceptable for other installations.

C. Set floor boxes level.

D. Install boxes and fittings to preserve fire resistance rating of fire rated assembly in which they occur.

3.04 ADJUSTING

A. Adjust floor box flush with finish flooring material.

3.05 CLEANING

A. Clean interior of boxes to remove dust, debris, and other material.

END OF SECTION

SECTION 26 05 53
IDENTIFICATION FOR ELECTRICAL SYSTEMS

PART 1 GENERAL

1.01 SUMMARY

A. Section Includes:
1. Nameplates.
2. Labels.
3. Wire markers.
4. Conduit markers.
5. Stencils.
6. Underground Warning Tape.

1.02 SUBMITTALS

A. Submit in accordance with the requirements of Division 1, Section 26 00 50, and this section.

B. Product Data:
1. Submit manufacturer’s catalog literature for each product required.
2. Submit electrical identification schedule including list of wording, symbols, letter size, color coding, tag number, location, and function.

C. Manufacturer's Installation Instructions: Indicate installation instructions, special procedures, and installation.

D. Project Record Documents: Record actual locations of tagged devices; include tag numbers.

1.03 DELIVERY, STORAGE, AND HANDLING

A. Deliver, store, and handle in accordance with the requirements of Division 1, Section 26 00 50, and this Section.

B. Accept identification products on site in original containers. Inspect for damage.

C. Accept materials on site in original factory packaging, labeled with manufacturer's identification, including product density and thickness.

D. Protect insulation from weather and construction traffic, dirt, water, chemical, and mechanical damage, by storing in original wrapping.

1.04 ENVIRONMENTAL REQUIREMENTS

A. Install identification only when ambient temperature and humidity conditions are within range recommended by manufacturer. Maintain conditions for time periods recommended by manufacturer.

PART 2 PRODUCTS

2.01 NAMEPLATES

A. Product Description: Laminated three-layer plastic with engraved black letters on light contrasting background color.

B. Letter Size:
1. 1/8 inch high letters for identifying individual equipment and loads.
2. 1/4 inch high letters for identifying grouped equipment and loads.

C. Minimum nameplate thickness: 1/8 inch.

2.02 LABELS

A. Labels: Embossed adhesive tape, with 3/16 inch white letters on black background.

2.03 WIRE MARKERS

A. Description: Cloth tape, type wire markers.

B. Legend:
1. Power and Lighting Circuits: Branch circuit or feeder number to indicate connection as actually installed.
2. Control Circuits: Control wire number to indicate connection as actually installed.

2.04 CONDUIT AND RACEWAY MARKERS

A. Description: Nameplate fastened with straps, or stencils.

B. Color:
1. 480 Volt System: Black lettering on white background.
2. 208 Volt System: Black lettering on white background.

C. Legend:
1. 480 Volt System: 480 VOLTS.
2. 208 Volt System: 208 VOLTS.

2.05 STENCILS

A. Stencils: With clean cut symbols and letters of following size:
1. Up to 2 inches Outside Diameter of Raceway: 1/2 inch high letters.
2. 2-1/2 to 6 inches Outside Diameter of Raceway: 1 inch high letters.

B. Stencil Paint: Semi-gloss enamel, colors to match existing color code, or if no existing code is in place, conform:
1. Blue lettering on white background.

PART 3 EXECUTION

3.01 PREPARATION

A. Degrease and clean surfaces to receive adhesive for identification materials.

B. Prepare surfaces in accordance with manufacturer's recommendations for stencil painting.

3.02 EXISTING WORK

A. Where existing components are modified in any way as a part of this project, install identification in accordance with this section.

3.03 INSTALLATION

A. Install identifying devices after completion of General Trades painting.

B. Nameplate Installation:
1. Install nameplate parallel to equipment lines.
2. Install nameplate for each electrical distribution and control equipment enclosure with corrosive-resistant mechanical fasteners, or adhesive.
3. Install nameplates for each control panel and major control components located outside panel with corrosive-resistant mechanical fasteners, or adhesive.
4. Secure nameplate to equipment front using screws.
5. Secure nameplate to inside surface of door on recessed panelboard in finished locations.
6. Install nameplates for the following:
   a. Switchboards.
   b. Panelboards.
   c. Transformers.
   d. Service Disconnects.

C. Label Installation:
1. Install label parallel to equipment lines.
2. Install label for identification of individual control device stations, and.
3. Install labels for permanent adhesion and seal with clear lacquer.

D. Wire Marker Installation:
1. Install wire marker for each conductor at panelboard gutters, pull boxes, outlet and junction boxes, and each load connection.
2. Mark data cabling (installed as a part of Contractor's work) at each end. Install additional marking at accessible locations along the cable run.
3. Install labels at data outlets (installed as a part of Contractor's work) identifying patch panel and port designation.

E. Conduit and Raceway Marker Installation:
   1. Install conduit and raceway marker for each conduit and raceway larger than 2 inches diameter, and longer than 6 feet.
      a. Marker Spacing: 20 feet on center.
      b. Identify using field painting.
         1) Paint colored band on each conduit or raceway.
            a) 480 Volt System: Blue.
            b) 208 Volt System: Yellow.

F. Stencil Installation:
   1. Apply stencil painting in accordance manufacturer's recommendations.

END OF SECTION

SECTION 26 0□23
LIGHTING CONTROL DEVICES

PART 1 GENERAL

1.01 SUMMARY

A. Section Includes:
1. Remote control lighting relays.
2. Lighting contactors.
3. Switches.
4. Switch plates.
5. Occupancy sensors.
6. Photocells.
7. Photocell control unit.

1.02 SUBMITTALS

A. Submit in accordance with the requirements of Division 1, Section 26 00 50, and this section.

B. Shop Drawings: Indicate dimensioned drawings of lighting control system components and accessories.
1. One Line Diagram: Indicating system configuration indicating panels, number and type of switches or devices.
2. Include typical wiring diagrams for each component.

C. Product Data: Submit manufacturer’s standard product data for each system component.

D. Manufacturer's Installation Instructions: Submit for each system component.

E. Project Record Documents: Record the following information:
1. Actual locations of components and record circuiting and switching arrangements.
2. Wiring diagrams reflecting field installed conditions with identified and numbered system components and devices.

F. Operation and Maintenance Data:
1. Submit replacement parts numbers.
2. Submit manufacturer’s published installation instructions and operating instructions.
3. Recommended renewal parts list.

1.03 DELIVERY, STORAGE, AND HANDLING

A. Deliver, store, and handle in accordance with the requirements of Division 1, Section 26 00 50, and this Section.

B. Accept components on site in manufacturer's packaging. Inspect for damage.

C. Protect components against any damage from any source.

PART 2 PRODUCTS

2.01 REMOTE CONTROL LIGHTING RELAYS

A. Product Description: Heavy duty, single-coil momentary contact mechanically held remote control relays.

B. Contacts: Rated 20 amperes at 120 volts. Rated for lighting applications with lamps as indicated on the plans.

C. Line Voltage Connections: Clamp type screw terminals.

D. Enclosure: NEMA ICS 6, to meet conditions. Fabricate enclosure from steel finished with manufacturer's standard enamel.
1. Interior Dry Locations: Type 1.
2. Exterior Locations: Type 3R.

2.02 LIGHTING CONTACTORS

A. Product Description: NEMA ICS 2, magnetic lighting contactor.

B. Configuration: Electrically held, 2, or 3 wire control.

C. Coil Operating Voltage: 24 volts, 60 Hertz.

D. Poles: To match circuit configuration and control function.

E. Contact Rating: Conductor over-current protection, include proper de-rating for continuous loads.

F. Accessories:
1. Cover Mounted Pilot Devices: NEMA ICS 5, standard-duty type with Form Z contacts.
2. Pushbutton: ON/OFF function, with unguarded configuration.
3. Selector Switch: ON/OFF/AUTOMATIC function, with rotary action.
4. Indicating Light: Green lens, transformer type, with led lamp.
5. Auxiliary Contacts: One, field convertible in addition to seal-in contact.
6. Relays: NEMA ICS 2.
7. Control Power Transformers: 120 volt secondary, in each enclosed contactor. Furnish fused secondary, and bond un-fused leg of secondary to enclosure.

G. Enclosure: NEMA ICS 6, to meet conditions. Fabricate enclosure from steel finished with manufacturer's standard enamel.
1. Interior Dry Locations: Type 1.
2. Exterior Locations: Type 3R.

2.03 SWITCHES

A. Wall Switch: Specification Grade, momentary pushbutton type for overriding relays.
   1. Material: Plastic.
   2. Color: Black.

B. Key Switch: Spade key type. Match non-key switch ratings.

C. Switches with Pilot Lamp: Momentary contact, rocker type, black color, rated 3 amperes at 25 VAC, with integral red pilot light.

2.04 SWITCH PLATES

A. Product Description: Specification Grade.
   1. Material: Stainless steel.

2.05 OCCUPANCY SENSOR

A. Compatible with modular relay panels. Capable of being wired directly without auxiliary components or devices.

B. Separate sensitivity and time delay adjustments with LED indication of sensed movement. User adjustable time-delay: 30 seconds to 30 minutes.

C. Furnish with manual override.

D. Operation: Silent.

E. Room Sensors: As indicated on Drawings.

2.06 PHOTOCELLS

A. General: Sensor connected to control-calibration module via single shielded conductor with maximum distance of 500 feet. Control unit powered by 24 VAC.

B. Control-Calibration Module: Furnish with the following:
   1. Capable of being switched between 4 measurement ranges.
   2. Separate trip points for high and low response settings.
   3. Momentary contact device to override photocell relays.
   4. Three minute time delay between switching outputs to avoid nuisance tripping.

C. Sensor Devices: Each sensor employs photo diode technology to allow linear response to daylight within illuminance range.
   1. Exterior Lighting: Hooded sensor, horizontally mounted, employing flat lens, and working range 1-10 foot-candles in 10 percent increments. Entire sensor encased in optically clear epoxy resin.

2.07 PHOTOCELL CONTROL UNIT

A. Product Description: Photodiode control unit with PHOTOCELL ENABLE and MASTER OVERRIDE inputs for remote control, 3 minute time delay, and with selectable ranges for 1-10 foot-candle.

PART 3 EXECUTION

3.01 INSTALLATION

A. Mount switches and occupancy sensors as indicated on Drawings.

B. Use only properly color coded, stranded wire. Install wire sizes as indicated on Drawings and in the specifications.

C. Label each low voltage wire clearly indicating connecting relay panel.

D. Mount relay as indicated on Drawings. Wire numbered relays in panel to control power to each load. Install relays to be accessible. Allow space around relays for ventilation and circulation of air.

E. Identify power wiring with circuit breaker number controlling load. When multiple circuit breaker panels are feeding into relay panel, label wires to indicate originating panel designation.

F. Label each low voltage wire with relay number at each switch or sensor.

3.02 ADJUSTING

A. Test each system component after installation to verify proper operation.

B. Confirm correct loads are recorded on directory card in each panel.

END OF SECTION

SECTION 26 24 16
PANELBOARDS

PART 1 GENERAL

1.01 SUMMARY

A. Section includes distribution and branch circuit panelboards.

1.02 SUBMITTALS

A. Submit in accordance with the requirements of Division 1, Section 26 00 50, and this section.

B. Shop Drawings: Indicate outline and support point dimensions, voltage, main bus ampacity, integrated short circuit ampere rating, circuit breaker and fusible switch arrangement and sizes.

C. Product Data: Submit catalog data showing specified features of standard products.

D. Project Record Documents: Record actual locations of panelboards and record actual circuiting arrangements.

E. Operation and Maintenance Data: Submit spare parts listing; source and current prices of replacement parts and supplies; and recommended maintenance procedures and intervals.

PART 2 PRODUCTS

2.01 DISTRIBUTION PANELBOARDS

A. Manufacturers:
1. GE Electrical.
2. Siemens.
3. Square D.
4. Substitutions: Permitted in accordance with Division 1, Section 23 00 50, and this section.

B. Product Description: NEMA PB 1, circuit breaker type panelboard.

C. Panelboard Bus: Copper, current carrying components, ratings as indicated on Drawings. Furnish copper ground bus in each panelboard.

D. Minimum integrated short circuit rating: As indicated on the plans.

E. Fusible Switch Assemblies: NEMA KS 1, quick-make, quick-break, load interrupter enclosed knife switch with externally operable handle. Furnish interlock to prevent opening front cover with switch in ON position. Handle lockable in OFF position. Fuse clips: Designed to accommodate NEMA FU 1, Class R fuses.

F. Molded Case Circuit Breakers: NEMA AB 1, circuit breakers with integral thermal and instantaneous magnetic trip in each pole. Furnish circuit breakers UL listed as Type HACR for air conditioning equipment branch circuits.

G. Circuit Breaker Accessories: Trip units and auxiliary switches as indicated on Drawings.

H. Enclosure: NEMA PB 1, Type 1.

I. Cabinet Front: Surface door-in-door type, fastened with concealed trim clamps, hinged door with flush lock, metal directory frame, finished in manufacturer's standard enamel.

2.02 BRANCH CIRCUIT PANELBOARDS

A. Manufacturers:
1. GE Electrical.
2. Siemens.
3. Square D.

B. Substitutions: Permitted in accordance with Division 1, Section 26 00 50, and this section.

C. Product Description: NEMA PB1, circuit breaker type, lighting and appliance branch circuit panelboard.

D. Panelboard Bus: Copper, current carrying components, ratings as indicated on Drawings. Furnish copper ground bus in each panelboard.

E. Minimum Integrated Short Circuit Rating: As indicated on Drawings.

F. Molded Case Circuit Breakers: NEMA AB 1, bolt-on type thermal magnetic trip circuit breakers, with common trip handle for all poles, listed as Type SWD for lighting circuits, Type HACR for air conditioning equipment circuits, Class A ground fault interrupter circuit breakers as indicated on Drawings. Do not use tandem circuit breakers.

G. Enclosure: NEMA PB 1, Type 1.

H. Cabinet Front: Flush cabinet front with concealed trim clamps, concealed hinge, metal directory frame, and flush lock keyed alike. Finish in manufacturer's standard enamel.

2.03 LOAD CENTERS

A. Manufacturers:
   1. GE Electrical.
   2. Siemens.
   3. Square D.
   4. Substitutions: Permitted in accordance with Division 1, Section 26 00 50, and this section.

B. Product Description: Circuit breaker load center, with bus ratings as indicated on Drawings.

C. Minimum Integrated Short Circuit Rating: 10,000 amperes rms symmetrical, or as indicated on the plans.

D. Molded Case Circuit Breakers: NEMA AB 1, plug-on type thermal magnetic trip circuit breakers, with common trip handle for poles, listed as Type SWD for lighting circuits, Class A ground fault interrupter circuit breakers. Do not use tandem circuit breakers.

E. Enclosure: General Purpose.

PART 3 EXECUTION

3.01 EXISTING WORK

A. Disconnect abandoned panelboards and load centers as may be indicated on the plans. Remove abandoned panelboards and load centers.

B. Maintain access to existing panelboards and load centers to remain in service. Modify installation or provide necessary access.

C. Clean and repair existing panelboards and load centers to remain or to be reinstalled.

3.02 INSTALLATION

A. Install panelboards and load centers in accordance with NEMA PB 1.1.

B. Install panelboards and load centers plumb.

C. Install recessed panelboards and load centers flush with wall finishes.

D. Height: 6 feet to top of panelboards and load centers; install panelboards taller than 6 feet with bottom no more than 4 inches above floor.

E. Install filler plates for unused spaces in panelboards.

F. Provide typed circuit directory for each panelboard and load center. Directory to reflect actual, final circuiting.

G. Install engraved plastic nameplates panelboards and load centers.

H. Install spare conduits out of each recessed panelboard to accessible location. Minimum spare conduits: 5 empty 1 inch. Identify each as SPARE.

I. Ground and bond panelboard enclosure according to the requirements of the NEC and other applicable portions of this specification. Connect equipment ground bars of panels in accordance with NFPA 70.

3.03 FIELD QUALITY CONTROL

A. Inspect and test in accordance with NETA ATS, except Section 4.

B. Perform circuit breaker inspections and tests listed in NETA ATS, Section 7.6.

C. Perform switch inspections and tests listed in NETA ATS, Section 7.5.

D. Perform controller inspections and tests listed in NETA ATS, Section 7.16.1.

3.04 ADJUSTING

A. Measure steady state load currents at each panelboard feeder; rearrange circuits in panelboard to balance phase loads to within 20 percent of each other. Maintain proper phasing for multi-wire branch circuits.

END OF SECTION

SECTION 26 27 26
WIRING DEVICES

PART 1 GENERAL

1.01 SUMMARY

A. Section includes wall switches; wall dimmers; receptacles; multi-outlet assembly; and device plates and decorative box covers.

1.02 SUBMITTALS

A. Submit in accordance with the requirements of Division 1, Section 26 00 50, and this section.

B. Product Data: Submit manufacturer's catalog information showing dimensions, colors, and configurations.

PART 2 PRODUCTS

2.01 WALL SWITCHES

2.02 WALL SWITCHES

A. Product Description: NEMA WD 1, Heavy-Duty, AC only general-use snap switch.

B. Body and Handle: Black plastic with rocker handle.

C. Locator Light: Lighted handle type switch; green color handle.

D. Ratings:
1. Voltage: 120 volts, AC.
2. Current: 20 amperes.

2.03 WALL DIMMERS

A. Product Description: NEMA WD 1, semiconductor dimmer for incandescent lamps.

B. Body and Handle: Black plastic with linear slide.

C. Voltage: 120 volts.

D. Power Rating: Match load shown on drawings.

E. Accessory Wall Switch: Match dimmer appearance.

2.04 RECEPTACLES

A. Product Description: NEMA WD 1, Heavy-duty, general use receptacle.

B. Device Body: Black plastic.

C. Configuration: NEMA WD 6.

D. Convenience Receptacle: Type 5-20.

E. GFCI Receptacle: Convenience receptacle with integral ground fault circuit interrupter to meet regulatory requirements.

2.05 WALL PLATES

A. Decorative Cover Plate: Smooth 302 stainless steel.

B. Jumbo Cover Plate: Smooth 302 stainless steel.

C. Weatherproof Cover Plate: Stainless steel plate with hinged and gasketed device cover.

2.06 MULTIOUTLET ASSEMBLY

A. Multi-outlet Assembly: Sheet metal channel with fitted cover, with pre-wired receptacles, suitable for use as multi-outlet assembly.

B. Receptacles: NEMA WD 6, type 5-15R, single receptacle.

C. Receptacle Spacing: 6 inches on center, or as indicated on Drawings.

D. Receptacle Color: Black.

E. Channel Finish: Stainless steel.

F. Fittings: Furnish manufacturer's standard couplings, elbows, outlet and device boxes, and connectors

PART 3 EXECUTION

3.01 EXAMINATION

A. Verify outlet boxes are installed at proper height.

B. Verify wall openings are neatly cut and completely covered by wall plates.

C. Verify branch circuit wiring installation is completed, tested, and ready for connection to wiring devices.

3.02 PREPARATION

A. Clean debris from outlet boxes.

3.03 EXISTING WORK

A. Disconnect and remove abandoned wiring devices, along with related wiring and conduit back to distribution panel.

B. Modify installation to maintain access to existing wiring devices to remain active.

C. Clean and repair existing wiring devices to remain or to be reinstalled.

3.04 INSTALLATION

A. Install devices plumb and level.

B. Install switches with OFF position down.

C. Install wall dimmers to achieve full rating specified and indicated after de-rating for ganging as instructed by manufacturer.

D. Do not share neutral conductor on load side of dimmers.

E. Install receptacles with grounding pole on top.

F. Connect wiring device grounding terminal to outlet box with bonding jumper and branch circuit equipment grounding conductor.

G. Install decorative plates on switch, receptacle, and blank outlets in finished areas.

H. Connect wiring devices by wrapping solid conductor around screw terminal. Install stranded conductor for branch circuits 10 AWG and smaller. When stranded conductors are used in lieu of solid, use crimp on fork terminals for device terminations. Do not place bare stranded conductors directly under device screws.

I. Use jumbo size plates for outlets installed in masonry walls (where the masonry is the finished surface).

J. Install galvanized steel plates on outlet boxes and junction boxes in unfinished areas, above accessible ceilings, and on surface mounted outlets.

3.05 INTERFACE WITH OTHER PRODUCTS

A. Coordinate locations of outlet boxes to obtain mounting heights as specified, as indicated on drawings, and as required by code.

B. Coordinate installation of wiring devices with floor box service fittings.

3.06 FIELD QUALITY CONTROL

A. Inspect each wiring device for defects.

B. Operate each wall switch with circuit energized and verify proper operation.

C. Verify each receptacle device is energized.

D. Test each receptacle device for proper polarity.

E. Test each GFCI receptacle device for proper operation.

3.07 ADJUSTING

A. Adjust devices and wall plates to be flush, level, and plumb.

3.08 CLEANING

A. Clean exposed surfaces to remove splatters and restore finish.

END OF SECTION

SECTION 26 51 00
INTERIOR LIGHTING

PART 1 GENERAL

1.01 SUMMARY

A. Section includes:
1. Interior luminaires.
2. Lamps.
3. Ballasts.
4. Accessories.

1.02 SUBMITTALS

A. Submit in accordance with the requirements of Division 1, Section 26 00 50, and this section.

B. Shop Drawings: Indicate dimensions and components for each luminaire not standard product of manufacturer.

C. Product Data: Submit dimensions, ratings, and performance data.

1.03 FIELD MEASUREMENTS

A. Verify field measurements prior to fabrication.

PART 2 PRODUCTS

2.01 INTERIOR LUMINAIRES

A. Product Description: Complete interior luminaire assemblies, with features, options, and accessories as scheduled.

2.02 FLUORESCENT BALLASTS

A. Product Description: Electronic ballast instant start less than 10 percent THD certified by Certified Ballast Manufacturers, Inc. to comply with ANSI C82.1, suitable for lamps specified, with voltage to match luminaire voltage.

2.03 HIGH INTENSITY DISCHARGE (HID) BALLASTS

A. Product Description: ANSI C82.4, suitable for lamp specified, with voltage to match luminaire voltage.

2.04 FLUORESCENT DIMMING BALLASTS AND CONTROLS

A. Product Description: Electrical assembly of control unit and ballast to furnish smooth dimming of fluorescent lamps.

B. Control Unit: As indicated on the plans.

C. Ballast: Selected by dimming system manufacturer as suitable for operation with control unit and suitable for lamp type and quantity specified for luminaire.

PART 3 EXECUTION

3.01 EXISTING WORK

A. Disconnect and remove abandoned luminaires, lamps, and accessories.

B. Extend existing interior luminaire installations using materials and methods compatible with existing installations, and as specified.

C. Clean and repair existing interior luminaires to remain or to be reinstalled.

3.02 INSTALLATION

A. Install suspended luminaires using pendants supported from swivel hangers. Install pendant length required to suspend luminaire at indicated height.

B. Support luminaires larger than 2 x 4 foot size independent of ceiling framing and as detailed on the plans.

C. Locate recessed ceiling luminaires as indicated on reflected ceiling plan.

D. Install surface mounted luminaires plumb and adjust to align with building lines and with each other. Secure to prevent movement.

E. Install recessed luminaires to permit removal from below.

F. Install recessed luminaires using accessories and fire-stopping materials to meet regulatory requirements for fire rating.

G. Install clips to secure recessed grid-supported luminaires in place.

H. Install wall-mounted luminaires at height as indicated on Drawings.

I. Install accessories furnished with each luminaire.

J. Connect luminaires to branch circuit.

K. Make wiring connections to branch circuit using building wire with insulation suitable for temperature conditions within luminaire.

L. Install specified lamps in each luminaire.

M. Ground and bond interior luminaires in accordance with the NEC and this specification.

3.03 FIELD QUALITY CONTROL

A. Operate each luminaire after installation and connection. Inspect for proper connection and operation.

3.04 ADJUSTING

A. Aim and adjust luminaires as indicated on Drawings.

3.05 CLEANING

A. Remove dirt and debris from enclosures.

B. Clean photometric control surfaces as recommended by manufacturer.

C. Clean finishes and touch up damage.

3.06 PROTECTION OF FINISHED WORK

A. All lamps shall be properly operating at Substantial Completion.

END OF SECTION

SECTION 26 70 00
FIRE DETECTION AND ALARM

PART 1 GENERAL

1.01 SUMMARY

A. Section includes:
1. Fire alarm control panels.
2. Manual fire alarm stations.
3. Automatic smoke and heat detectors.
4. Fire alarm signaling appliances.
5. Auxiliary fire alarm equipment and power and signal wire and cable.

1.02 SYSTEM DESCRIPTION

A. This is a Design-Build specification for the fire alarm system for this project.
1. The Contractor shall provide all required design, materials and installation to establish a complete, code compliant fire alarm system. Fire Alarm devices shown on the plans are for reference only and shall not be construed to establish the scope of the work that is actually required by code and Authorities Having Jurisdiction.
2. The Contractor shall submit all documentation to the State Department of Corrections and Fire Marshall which may be required to obtain the approval of these agencies for this project.
3. Each device in the fire alarm system shall be individually addressable.
4. Include appropriate signal from existing fire alarm system within the existing jail complex.

B. Fire Alarm System: NFPA 72, local fire alarm system.

1.03 SUBMITTALS

A. Submit in accordance with the requirements of Division 1, Section 26 00 50, and this section.

B. Shop Drawings: Indicate system wiring diagram showing each device and wiring connection; indicate annunciator layout, and design calculations. Submit only copies of documents that have already been approved by the various authorities having jurisdiction.

C. Product Data: Submit catalog data showing electrical characteristics and connection requirements.

D. Test Reports: Indicate procedures and results for specified field testing and inspection.

E. Manufacturer's Field Reports: Indicate activities on site, adverse findings, and recommendations.

F. Project Record Documents: Record actual locations of fire alarm equipment.

G. Operation and Maintenance Data: Submit manufacturer's standard operating and maintenance instructions.

1.04 QUALITY ASSURANCE

A. Wiring materials located in air handling plenums shall have: A peak optical density not greater than 0.5; an average optical density not greater than 0.15; and a flame spread not greater than 5 feet (1.5 m) when tested in accordance with NFPA 262.

1.05 MAINTENANCE SERVICE

A. Furnish service and maintenance of fire alarm equipment for [one year] from Date of Substantial Completion at no additional cost to the Owner.

PART 2 PRODUCTS

2.01 CONTROL PANEL

A. Product Description: Modular fire alarm control panel with flush wall-mounted enclosure.

B. Power supply: Adequate to serve control panel modules, and all necessary system devices. Include battery-operated emergency power supply with capacity for operating system in standby mode for two (2) minutes with no loss of programming information.

C. System Supervision: Component or power supply failure places system in trouble mode.

D. Initiating Device Circuits: Supervised zone module with alarm and trouble indication; occurrence of single ground or open condition places circuit in trouble mode but does not disable circuit from initiating alarm.

E. Indicating Appliance Circuits: Supervised signal module, sufficient for signal devices connected to system; occurrence of single ground or open condition places circuit in trouble mode but does not disable circuit from signaling alarm.

F. Remote Station Signal Transmitter: Electrically supervised digital alarm communicator transmitter, capable of transmitting alarm and trouble signals over telephone lines to central station receiver.

G. Auxiliary Relays: Sufficient SPDT auxiliary relay contacts to provide necessary accessory functions.

2.02 MANUAL FIRE ALARM STATIONS

A. Product Description: Manual single-action station with break-glass rod.

B. Mounting: Semi-Flush.

C. Type: Coded.

D. Back-box: Manufacturer's standard.

2.03 SPOT HEAT DETECTOR

A. Product Description: Fixed temperature or Combination rate-of-rise and fixed temperature, spot heat detector.

B. Temperature Rating: 135 degrees F.

C. Rate-of-Rise: 15 degrees F.

2.04 CEILING SMOKE DETECTOR

A. Product Description: NFPA 72, ionization type ceiling smoke detector with the following features:
1. Adjustable sensitivity.
2. Plug-in base.
3. Auxiliary relay contact.
4. Integral thermal element rated 135 degrees F.
5. Visual indication of detector actuation.
6. Comply with UL 268.

B. Mounting: 4 inch outlet box.

2.05 DUCT-MOUNTED SMOKE DETECTOR

A. Product Description: NFPA 72, ionization type with the following features:
1. Auxiliary SPDT relay contact.
2. Key-operated normal-reset-test switch.
3. Duct sampling tubes extending width of duct.
4. Visual indication of detector actuation.
5. Duct-mounted housing.
6. Comply with UL 268A.

2.06 ALARM LIGHTS

A. Product Description: NFPA 72, strobe lamp and flasher with red lettered "FIRE" on white lens.

2.07 ALARM HORN

A. Product Description: NFPA 72, surface type fire alarm horn with the following features:
   1. Sound Rating: As necessary to achieve code required building sound levels.
   2. Integral strobe lamp and flasher with red lettered "FIRE" on white lens.

2.08 REMOTE ANNUNCIATOR

A. Product Description: Supervised remote annunciator including audible and visual indication of fire alarm by zone, and audible and visual indication of system trouble.

B. Mounting: Factory mounted in [flush] [surface] wall-mounted enclosure.

2.09 DOOR RELEASE

A. Product Description: Magnetic door holder with integral diodes to reduce buzzing.

2.10 WIRE AND CABLE

A. Product Description: Non-power limited fire-protective signaling cable, copper conductor, 150 volt insulation rated 60 degrees C.

B. Cable Located Exposed in Plenums: Power limited fire-protective signaling cable classified for fire and smoke characteristics, copper conductor, 300 volts insulation rated 105 degrees C, suitable for use in air handling ducts, hollow spaces used as ducts, and plenums.

C. Fire alarm circuit conductors have insulation color or code as follows:
   1. Power Branch Circuit Conductors: Black, red, white.
   2. Initiating Device Circuit: Black, red.
   3. Detector Power Supply: Violet, brown.
   4. Signal Device Circuit: Blue (positive), white (negative).
   5. Door Release: Gray, gray.
   6. Municipal Trip Circuit: Orange, orange.
   7. Municipal Fire Alarm Loop: Black, white.

PART 3 EXECUTION

3.01 EXAMINATION

A. Verify products and systems receiving devices are ready for installation.

3.02 EXISTING WORK

A. Remove exposed abandoned fire alarm wiring, including abandoned wiring above accessible ceiling finishes. Cut cable flush with walls and floors, and patch surfaces.

B. Disconnect and remove abandoned fire alarm equipment.

C. Maintain access to existing fire alarm equipment and other installations remaining active and requiring access. Modify installation or provide access panel.

D. Extend existing fire alarm installations using materials and methods compatible with existing installations, and as specified.

E. Clean and repair existing fire alarm equipment to remain or to be reinstalled.

3.03 INSTALLATION

A. Install manual station with operating handle at elevation compatible with all applicable code, including ADA requirements.

B. Install audible and visual signal devices 7 feet 6 inches feet above floor.

C. Install 16 AWG minimum size conductors for fire alarm detection and signal circuit conductors in conduit or cable.

D. Mount end-of-line device in control panel.

E. Mount outlet box for electric door holder to withstand 80 pounds pulling force.

F. Connect conduit and wire to each system component in compliance with all codes and standards.

G. Automatic Detector Installation: Conform to NFPA 72.

H. Install engraved plastic nameplates at each panel and major item of equipment.

I. Ground and bond fire alarm equipment and circuits in accordance with all applicable codes and standards.

3.04 FIELD QUALITY CONTROL

A. Test in accordance with NFPA 72, and the requirements of the authorities having jurisdiction.

3.05 MANUFACTURER'S FIELD SERVICES

A. Include services of certified technician to supervise installation, adjustments, final connections, and system testing.

3.06 DEMONSTRATION AND TRAINING

A. Furnish eight (8) hours of instruction, on at least two (2) separate days for Owner personnel. This training is to be conducted at project site with manufacturer's representative.

END OF SECTION

DIVISION 28 00 00
ELECTRONIC SECURITY AND CONTROL SYSTEM (ESCS)
TABLE OF CONTENTS

Section	Title
28 00 50	Electronic Security and Control System General Requirements
28 05 33	Back-boxes for ESCS
28 05 53	Identification for ESCS
28 13 00	Access Control Sub-System
28 23 00	Video Surveillance Sub-System
28 33 00	Intercom Sub-System

END OF SECTION

SECTION 28 00 50
ELECTRONIC SECURITY AND CONTROL SYSTEM (ESCS)
GENERAL REQUIREMENTS

PART 1 GENERAL

1.01 SCOPE OF WORK

A. This division describes the sub-systems required for the Electronic Security and Control System. All electrical work (wiring, conduit, breakers, receptacles, connections, etc.) that is not specifically shown on the E100 series drawings shall be provided by the ESCS Contractor as a part of his bid on the project.

B. For this project the security controls as noted on the drawings shall be extended from the existing Jail Master Control System and shall not be included in the bid work for this project.

C. For the balance of the building, the Contractor shall provide a complete new control system that provides the required functions. Required “head end” gear will be located in Electrical Room 105. The system shall provide integrated operation of all sub-systems.

D. Description of Work:
1. The work includes furnishing of all labor, materials, equipment, wiring, conduit, and incidental services required to complete, and leave ready for proper operation, the ESCS as indicated on the drawings and hereinafter specified.

E. Drawings
1. General: The drawings show the location and general arrangement of all ESCS work and shall be followed as closely as actual building construction and work of other trades will permit. The ESCS Contractor shall examine the drawings of other trades and shall verify the conditions governing his work at the job site. He shall arrange his work accordingly. No changes shall be made without the prior written approval of the Owner's Representative.
2. Field Measurements: Verify the dimensions governing this work at the building site. No extra compensation will be claimed or allowed on account of differences between actual dimensions and those indicated on the drawings. Examine adjoining work, on which this work is dependent and report any work which must be corrected. No waiver of responsibility for defective work shall be claimed or allowed due to the failure to report unfavorable conditions affecting this work. Generally, the Architectural and Mechanical drawings take precedence in all matters pertaining to the building structure; security drawings in all matters pertaining for ESCS Contractor installation. However, all conflicts shall be reported to the General Contractor & Owner's Representative for his review.

3. Coordination: Before any work is installed, and before any equipment is fabricated or purchased, the ESCS Contractor shall carefully check the general drawings, and all other mechanical and electrical drawings, and all job conditions and any lack of coordination between the work and the drawings or job conditions shall be immediately reported in writing.

1.02 DIVISION INCLUDES

A. Master Control Station and General Systems:
1. The following sub-system functions and equipment, shall be integrated to form the Electronic Security and Control System (ESCS).
a. Door Control System
b. CCTV System
c. Emergency Duress System.

B. In general, the completed system shall provide the functionality described below:
1. Door Control:
a. Doors as noted on the drawings. Monitoring and control from a computer based system.
2. CCTV System:
a. Camera locations as noted on the drawings. Monitoring, control, and recording functions from a computer based system.
3. Emergency Duress System:
a. Fully addressable to identify the specific alarm location.
b. Activation of an alarm sends a pre-recorded message by automatic telephone communication to:
1) County E911 Dispatch Center.

1.03 DIVISION GENERAL REQUIREMENTS

A. This Division is a part of the entire set of Contract Documents and shall be coordinated with the application provisions of the other parts.

B. The following requirements are intended as clarification of, or additions to the requirements set forth under General Conditions, Supplementary Conditions of these Specifications. Should there be any conflict between these requirements and those in the General Conditions, Supplementary Conditions, and other Division 28 00 00 sections, make written request for clarification of same by addendum prior to bid opening.

1.04 QUALITY CONTROL

A. Currently approved system integrators:
1. Grand Valley Automation
2. Midstate Security Systems.
3. E/O Integrated Systems.
4. Simplex.
5. Data Consultants.

B. The ESCS shall be bid as a complete package to provide one responsibility for the installation and operation of the ESCS. No partial bids for any of the specified sub-systems will be considered.

C. All system components and installation must comply with the applicable building code, local ordinances, and regulations and the requirements of all authorities having jurisdiction.

1.05 INSPECTION OF SITE

A. The ESCS Bidder shall visit the site, examine and verify the conditions under which his work must be conducted before submitting a proposal.

B. The submitting of a proposal implies that the ESCS Bidder has visited the site and is conversant with the conditions under which his work must be conducted.

1.06 SYSTEM DESCRIPTION

A. The intent of this specification is to provide an IP based, distributed, networked digital ESCS.

B. Each Control Station shall provide for the monitoring and control of the various components of the ESCS and shall consist of a personal computer, two (2) 19 inch flat screen monitors.

C. The Electrical Contractor shall provide only the work specifically indicated on the electrical plans (as related to this system). The ESCS contractor shall arrange & pay for all other work required for the proper installation and operation of this system.

D. All software required for the proper operation of the ESCS shall become the property of Chippewaw County. This includes PLC ladder logic and mnemonic documentation, software documents and editable files (i.e. - tag name.x, .win,.WVW, etc.), etc.

1.07 SUBMITTALS

A. General: Furnish submittals indicated here and in the other Sections of this Division of the Specification.

B. Submit following general information:
   1. Schedules listing required Boxes, Wire / Cables and Conduit / Raceways.

C. Materials shall be as specified in this and all Division 28 00 00 Sections.

1.08 WARRANTY

A. The equipment shall be backed by a two (2) year comprehensive warranty covering all labor, material, travel and equipment.

PART 2 PRODUCTS

2.01 PC WORKSTATION

A. The PC workstation shall:
1. Use a graphical user interface (GUI) that is compatible with Microsoft® Windows 2000, 2000 Advanced Server, 2003 Server, XP Professional or .NET operating system. System control shall be handled by standard keyboard/mouse for all live monitoring live and recorded video functions.
2. Allow administrators to configure devices, set up users, adjust network settings, and create recording schedules. Permission to access these functions and all other system services can be configured to a fine level of detail. The PC workstation shall have advanced search capabilities, event logging, and alarm interface displays. The PC workstation shall export video and still images in multiple formats, including QuickTime® MPEG-4, H.264, AVI, BMP, and JPG. A front panel USB port and DVD/CD-RW drive shall be included to make it capable of exporting video clips and still images to external media. Authentication software shall be exported automatically for any Native exports.
3. Allow users with authority to monitor content from standard resolution, megapixel resolution cameras, and encoders throughout the network. The PC workstation shall display content encoded in MPEG-4, H.264 baseline, H.264 main, and H.264 high profile.
4. Support audio feed with video transmission.
5. Have the ability to receive pushed video from video server.

B. The Master Control Graphic layouts shall be arranged and shall have symbols/icons placed appropriately for the graphic background.

C. Control switching shall be by mouse driven software.

D. Monitoring / status indication shall be by graphic indication.

E. The control graphic system shall be connected to control relays and microprocessor input and output terminals to provide functions and information required by this (ESCS) Division.

2.02 FLAT PANEL, TFT LCD MONITOR

A. The flat panel TFT LCD monitor shall:
1. Provide high resolution and high contrast for the sharpest video display. It shall have a quick response time to minimize ghosting and streaking in fast-moving scenes.
2. Be mounted on a desktop, wall, pole, or rack. The front panel controls shall allow for easy adjustment of image quality, brightness, size, position, and geometry for optimal viewing.
3. Have an auto-ranging power supply and low power consumption.

4. Meet or exceed the following design and performance specifications:
   a. Electrical Specifications
      1) Input Voltage 100 to 240 VAC, 50/60 Hz, internal power supply.
      2) Power Consumption <50 W (on), <5 W (standby)
      3) Input Interfaces
         a) VGA 1,15-pin D-sub
         b) Audio 1, RCA, looping, 0.7 Vp-p
      4) Horizontal Frequency: 30 kHz to 80 kHz.
      5) Vertical Frequency: 56 Hz to 75 kHz.
   b. Environmental Specification:
      1) Operating Temperature: 32° to 104°F (0° to 40°C).
      2) Operating Humidity: 20% to 85%, non-condensing.
   c. Physical Specifications:
      1) PMCL219: 3.3” D x 16.6” W x 14.7” H.
   d. General Specifications, PMCL219:
      1) Panel Resolution: 1280 x 1024 (maximum), 75 Hz.
      2) Panel Aspect Ratio: 5:4 VGA.
      3) Viewing Area: 376 x 301 mm.
      4) Pixel Pitch: 0.294 x 0.294 mm.
      5) Brightness: 250 cd/m².
      6) Contrast Ratio: 500:1.
      7) Backlight Type: 4 CCFL.
      8) Panel Lamp Life: 40,000 hours.
      9) Tilt: 10° to 45°.
      10) Viewing Angle (H/V): 150°/130°.
      11) Display Colors: 16.7 million.
      12) Response Time: 8 ms.
      13) Speakers: 2, integrated, 1 W each.
      14) Front Panel Controls: Menu (up, down, left, right), power.
      15) Indicators: LED (power on, off), on-screen (“no signal”).
      16) Warranty: 1 year, parts and labor.

2.03 WIRE, CABLE & EQUIPMENT:

A. All system cable, wire, boxes and conduit to boxes required for facility communication & control systems shall be the responsibility of the ESCS Contractor. The ESCS Contractor shall furnish & install or subcontract for all of these components.

B. Cable and wire selected by the ESCS Contractor for each application shall be in strict accordance with the original equipment manufacturers recommendations, the National Electric Code.

C. All cables and wires shall be permanently tagged with I.D. at both ends.

D. Mount system components where indicated on the plans and in accordance with the approved shop drawings, the requirements of the plans and specifications, recognized industry practices, and the manufacturer's written -instructions.

E. All wires and cables shall be routed in a neat and workmanlike manner, with all runs vertically or horizontally. They shall be suitably suspended or contained in thin wall conduit or bridal rings as deemed appropriate.

2.04 POWER SUPPLIES:

A. Power supplies shall be provided by this Contractor as required to support the proper operation of all components of the ESCS. The power supplies shall be protected from overload by an automatic resetting circuit breaker.

B. All power supplies shall be listed by Underwriters Laboratories and certified by the Canadian Standards Association.

C. UPS System(s) & or batteries shall be furnished as required, to maintain all ESCS programming, logic, indicating lights and capability to operate through a minimum of 2 minutes during a power outage.

2.05 EQUIPMENT RACKS

1. Equipment racks (if required) shall include equipment to provide all system features and functions as required and indicated herein. Unless otherwise noted, all equipment racks shall be standard 19 inch vertical, wall mount & floor mount structures. Coordinate sizes, types and dimensions prior to construction.
2. The equipment rack assemblies shall provide adequate panel mounting space, with a minimum of 20% spare rack space included. The racks shall be constructed of at least 16 gauge steel, heavily reinforced for maximum strength and durability. Multiple, properly cut, rolled and brushed access holes for internal wiring shall also be provided in each rack assembly. Provide blank panels as necessary to fill unused panel space.

2.06 SURGE SUPPRESSION

A. All systems shall be equipped with Transient Voltage Surge Suppression to adequately protect components from lightning and power surges. Special attention should be given to exterior mounted CCTV cameras and associated equipment.

PART 3 EXECUTION

3.01 EXISTING SYSTEMS

A. All existing system shall be maintained in operation during the installation of the new systems. Any interference with the operation of the existing system shall be carefully coordinated with the Owner.

3.02 TRAINING

A. As a part of the base bid, provide a total of 32 hours of training at the project site the Owner’s personnel. Training will be scheduled at the Owner’s convenience and shall include at least three separate training occasions.

END OF SECTION

SECTION 28 05 33
BOXES FOR THE ESCS

PART 1 GENERAL

1.01 SUMMARY

A. Section includes:
1. Outlet boxes.
2. Pull and junction boxes.

1.02 SYSTEM DESCRIPTION

A. Boxes located as indicated on Drawings, and at other locations required for splices, taps, wire pulling, equipment connections, and compliance with regulatory requirements. Boxes are shown in approximate locations unless dimensioned.

1.03 SUBMITTALS – NOT USED

1.04 DELIVERY, STORAGE, AND HANDLING

A. Deliver, store, and handle in accordance with the requirements of Division 1, Section 28 00 50, and this Section.

1.05 COORDINATION

A. Coordinate mounting heights, orientation and locations of boxes with all features of other systems including, but not limited to: Cabinets, counter heights, backsplash heights, finned tube, mirrors, etc.

PART 2 PRODUCTS

2.01 OUTLET BOXES

A. Sheet Metal Outlet Boxes: NEMA OS 1, galvanized steel.
1. Luminaire and Equipment Supporting Boxes: Rated for weight of equipment supported; furnish 1/2 inch male fixture studs where required.
2. Concrete Ceiling Boxes: Concrete type.

B. Cast Boxes: NEMA FB 1, Type FD, aluminum. Furnish gasketed cover by box manufacturer.

C. Wall Plates for Unfinished Areas: Furnish gasketed cover.

2.02 PULL AND JUNCTION BOXES

A. Sheet Metal Boxes: NEMA OS 1, galvanized steel.

B. Surface Mounted Cast Metal Box: NEMA 250, Type 4; flat-flanged, surface mounted junction box:
   1. Material: Galvanized cast iron.
   2. Cover: Furnish with ground flange, neoprene gasket, and stainless steel cover screws.

PART 3 EXECUTION

3.01 CORRDINATION

A. It is intended that all boxes be concealed in the project work area, unless specifically noted to the contrary on the Plans. Surface mounted boxes are only acceptable for existing walls that are to remain in place, and then, only as specifically noted on the Plans, or approved by other means.

3.02 EXAMINATION

A. Verify outlet locations and routing and termination locations of raceway prior to rough-in. Verification shall include, but not be limited to: Review final furniture layouts, initiate a meeting to include the Owner and Architect / Engineer to review proposed receptacle locations.

3.03 EXISTING WORK

A. Remove exposed abandoned raceway, including abandoned raceway above ceilings in the project work area. Cut raceway flush with walls and floors, and patch surfaces.

B. Remove concealed abandoned raceway to its source, including conditions where the subject raceway extends beyond the new work area.

C. Disconnect abandoned outlets and remove devices. Remove abandoned outlets when raceway is abandoned and removed. Install blank cover for abandoned outlets not removed (where the existing wall is to remain in place).

D. Maintain access to existing boxes and other installations remaining active and requiring access. Modify installation or provide access panel.

E. Extend existing raceway and box installations using materials and methods compatible with existing electrical installations, and as specified.

F. Clean and repair existing raceway and boxes to remain or to be reinstalled.

3.04 INSTALLATION - BOXES

A. All boxes shall be installed plumb, and flush with the surface in which they are installed.

B. Install wall mounted boxes at elevations to accommodate mounting heights required by Code and as indicated on Drawings.

C. Orient boxes to accommodate wiring devices oriented as specified elsewhere.

D. Install pull boxes and junction boxes above accessible ceilings and in unfinished areas only.

E. In Accessible Ceiling Areas: Install outlet and junction boxes no more than 6 inches from ceiling access panel or from removable recessed luminaire.

F. Coordinate masonry cutting to achieve neat opening.

G. Install boxes serving rooms on opposite sides of a common wall with a minimum of 6 inches separation. Where the wall construction includes sound attenuation, increase the minimum separation to 24 inches. Do not install boxes back to back.

H. Secure flush mounting box to interior wall and partition studs. Accurately position to allow for surface finish thickness.

I. Install stamped steel bridges to fasten flush mounting outlet box between studs.

J. Install flush mounting box without damaging wall insulation or reducing its effectiveness.

K. Install adjustable steel channel fasteners for hung ceiling outlet box.

L. Do not fasten boxes to ceiling support wires or other piping systems.

M. Support boxes independently.

N. Install gang box where more than one device is mounted together. Do not use sectional box.

O. Install gang box with plaster ring for single device outlets.

3.05 INTERFACE WITH OTHER PRODUCTS

A. Align adjacent wall mounted outlet boxes for switches, thermostats, and similar devices.

3.06 ADJUSTING

A. Adjust flush-mounting outlets to make front plumb, and flush with finished wall material.

B. Install knockout closures in unused openings in boxes.

3.07 CLEANING

A. Clean interior of boxes to remove dust, debris, and other material.

B. Clean exposed surfaces and restore finish.

END OF SECTION

SECTION 28 05 53
IDENTIFICATION FOR THE ESCS

PART 1 GENERAL

1.01 SUMMARY

A. Section Includes:
1. Nameplates.
2. Labels.
3. Wire markers.

1.02 SUBMITTALS

A. Submit in accordance with the requirements of Division 1, Section 286 00 50, and this section.

B. Product Data:
1. Submit manufacturer’s catalog literature for each product required.
2. Submit electrical identification schedule including list of wording, symbols, letter size, color coding, tag number, location, and function.

C. Manufacturer's Installation Instructions: Indicate installation instructions, special procedures, and installation.

D. Project Record Documents: Record actual locations of tagged devices; include tag numbers.

1.03 DELIVERY, STORAGE, AND HANDLING

A. Deliver, store, and handle in accordance with the requirements of Division 1, Section 28 00 50, and this Section.

B. Accept identification products on site in original containers. Inspect for damage.

C. Accept materials on site in original factory packaging, labeled with manufacturer's identification, including product density and thickness.

D. Protect insulation from weather and construction traffic, dirt, water, chemical, and mechanical damage, by storing in original wrapping.

1.04 ENVIRONMENTAL REQUIREMENTS

A. Install identification only when ambient temperature and humidity conditions are within range recommended by manufacturer. Maintain conditions for time periods recommended by manufacturer.

PART 2 PRODUCTS

2.01 NAMEPLATES

A. Product Description: Laminated three-layer plastic with engraved black letters on light contrasting background color.

B. Letter Size:
1. 1/8 inch high letters for identifying individual equipment and loads.
2. 1/4 inch high letters for identifying grouped equipment and loads.

C. Minimum nameplate thickness: 1/8 inch.

2.02 LABELS

A. Labels: Embossed adhesive tape, with 3/16 inch white letters on black background.

2.03 WIRE MARKERS

A. Description: Cloth tape, type wire markers.

B. Legend:
1. Power and Lighting Circuits: Branch circuit or feeder number to indicate connection as actually installed.
2. Control Circuits: Control wire number to indicate connection as actually installed.

PART 3 EXECUTION

3.01 PREPARATION

A. Degrease and clean surfaces to receive adhesive for identification materials.

B. Prepare surfaces in accordance with manufacturer's recommendations for stencil painting.

3.02 EXISTING WORK

A. Where existing components are modified in any way as a part of this project, install identification in accordance with this section.

3.03 INSTALLATION

A. Install identifying devices after completion of General Trades painting.

B. Nameplate Installation:
   1. Install nameplate parallel to equipment lines.
   2. Install nameplate for each electrical distribution and control equipment enclosure with corrosive-resistant mechanical fasteners, or adhesive.
   3. Install nameplates for each control panel and major control components located outside panel with corrosive-resistant mechanical fasteners, or adhesive.
   4. Secure nameplate to equipment front using screws.
   5. Secure nameplate to inside surface of door on recessed panelboard in finished locations.
   6. Install nameplates for the following:
      a. Items of Equipment for the ESCS.

C. Label Installation:
   1. Install label parallel to equipment lines.
   2. Install label for identification of individual control device stations, and.
   3. Install labels for permanent adhesion and seal with clear lacquer.

D. Wire Marker Installation:
   1. Install wire marker for each conductor at panelboard gutters, pull boxes, outlet and junction boxes, and each load connection.
   2. Mark data cabling (installed as a part of Contractor’s work) at each end. Install additional marking at accessible locations along the cable run.
   3. Install labels at data outlets (installed as a part of Contractor’s work) identifying patch panel and port designation.

END OF SECTION

SECTION 28 13 00
ACCESS CONTROL

PART 1 GENERAL

1.01 SUMMARY

A. Section includes security access devices and control panel, and signal and control wiring.

1.02 SYSTEM DESCRIPTION

A. Integrate all features into the Electronic Security and Control System (ESCS).

B. Control access to building and selected areas using encoded cards, as indicated on the plans.

C. Allow the Owner's existing access control cards to be read into the new system so that existing cards can be used to allow access as programmed on the new system

1.03 SUBMITTALS

A. Submit in accordance with the requirements of Division 1, Section 28 00 50, and this section.

B. Shop Drawings: Indicate system wiring diagram showing each device and wiring connection; indicate annunciator layout, sequence of operation.

C. Product Data: Submit catalog data showing electrical characteristics and connection requirements.

D. Test Reports: Indicate procedures and results for specified field testing and inspection.

E. Manufacturer's Field Reports: Indicate activities on site, adverse findings, and recommendations.

F. Project Record Documents: Record actual locations of security access equipment.

G. Operation and Maintenance Data: Submit manufacturer's standard operating and maintenance instructions.

1.04 MATERIALS

A. Furnish on hundred (100) key cards, and program as directed by the Owner.

PART 2 PRODUCTS

2.01 CONTROL PANEL

A. Product Description: Modular control panel with flush wall mounted enclosure.

B. Power supply: Adequate to serve control panel modules, card key readers, and door hardware devices. Provide UPS capable of carrying over 2 minute power outage without loss of data.

C. Zone Bypass: Integrate into ESCS.

D. System Bypass Switch: Integrate into ESCS.

E. Entry and Exit Time Delays: Adjustable through ESCS.

2.02 CARD READERS

A. Product Description: Magnetic card swipe proximity reader in cast aluminum housing suitable for interior or exterior installation as indicated on the plans.

2.03 CARD KEYS

A. Product Description: Plastic-laminated card with access information encoded magnetically.

2.04 WIRE AND CABLE

A. Product Description: Non-power limited cable, copper conductor, 150 volt insulation rated 60 degrees C.

PART 3 EXECUTION

3.01 EXISTING WORK

A. Remove exposed abandoned security access wiring, including abandoned wiring above accessible ceiling finishes. Cut cable flush with walls and floors, and patch surfaces.

B. Disconnect and remove abandoned security access equipment.

C. Maintain access to existing security access equipment and other installations remaining active and requiring access. Modify installation or provide access panel.

D. Extend existing security access installations using materials and methods compatible with existing installations, and as specified.

E. Clean and repair existing security access equipment to remain or to be reinstalled.

3.02 INSTALLATION

A. Install 18 AWG minimum size conductors for circuit conductors. Install wiring in cable support rings.

B. Install wiring connections to door hardware devices.

C. Install engraved plastic nameplates at each item of equipment (does not include individual card readers).

D. Ground and bond security access equipment and circuits as required by applicable codes and standards.

3.03 FIELD QUALITY CONTROL

A. Test in accordance with manufacturer’s recommendations. Make modifications as necessary, and re-test until proper operation is achieved.

3.04 MANUFACTURER'S FIELD SERVICES

A. Furnish services of technician to supervise installation, adjustments, final connections, system testing, and Owner training.

END OF SECTION

SECTION 28 23 00
VIDEO SURVEILLANCE

PART 1 GENERAL

1.01 SUMMARY

A. Section includes cameras, control equipment and accessories.

1.02 CODES AND STANDARDS

A. Work shall be performed in accordance with the applicable national and local codes or standards current at the commencement of installation.

1.03 SYSTEM DESCRIPTION

A. Video surveillance, recording and video monitoring at points indicated on drawing.

B. The intent of this specification is to provide the owner with a distributed networked digital security system. Supplied by the contractor, the security video system shall be complete and operational per the performance requirements and objectives of these specifications. The contractor shall be responsible for the coordination of related work with other trades affecting his/her work or the work of others.

1.04 SUBMITTALS

A. Submit in accordance with the requirements of Division 1, Section 28 00 50, and this section.

B. Product Data: Include detailed manufacturer's product specifications for each component specified. Include data sheets reflecting the model numbers, features, ratings, performance, power requirements, and dimensions.

C. Shop Drawings: IP video security system equipment shall include plans, elevations, sections, details, and attachments to other work. The system shall also include dimensioned plans and elevation views of components and enclosures; show access and workspace requirements; and shop drawings shall include mounting details for all racked equipment. Such details shall include all mounting brackets, hardware, and connections to the building.

D. Wiring Diagrams: Diagrams shall include power, signal, and control wiring point-to-point diagrams. They shall differentiate between manufacturer-installed and field-installed wiring. It is the contractor's responsibility to submit for approval, the complete designed system configuration and layout showing all devices, wiring, conduit, and locations, along with other required information as specified herein for the complete integrated system proposed for installation.

E. Project Record Documents: Record actual locations of cameras, servers and routing of cables.

F. Operation and Maintenance Data: Submit instructions for operating system and performing routine operating and troubleshooting procedures.

1.05 ENVIORONMENTAL REQUIREMENTS

A. Conform to manufacture's standard service conditions during and after installation of components.

1.06 MAINTENANCE SERVICE

A. Maintenance Data: Provide data for distributed network video surveillance system equipment and components. Include the following information (in addition to that specifically requested elsewhere): Detailed operating instructions covering operation under both normal and abnormal conditions; routine maintenance requirements for system components; and lists of spare parts and replacement components recommended are to be stored at the site for ready access.

B. Furnish service and maintenance of video surveillance system for one year from date of substantial completion, at no additional cost to the Owner.

PART 2 PRODUCTS

2.01 VIDEO MANAGEMENT SYSTEM CAPABILITES

A. The following information describes the general architecture and basic functionality deemed essential for the IP video management system described in this specification:
   1. The IP Video Management System shall be built upon open, industry standards and facilitate integration with IT infrastructures and other digital and analog systems.
   2. The IP Video Management System shall allow the display of live, record and playback of digital video streams from multiple video surveillance IP cameras, simultaneously, on the System's operator console and/or other display and control platforms including clients, virtual matrix display, PDA and Cell phone.
   3. The IP Video Management System shall support cameras and encoders using MJPEG, MPEG4 Wavelet H263 and/or H.264 compression. System shall communicate and receive video image streams from IP addressable devices using IP protocol. The compression level shall be adjustable to save on storage space if needed.
   4. The IP Video Management System shall incorporate PTZ camera management technology using IP protocol, as well as serial control methodologies such as Pelco P or Pelco D protocols.
   5. The IP Video Management System shall provide support for IP cameras from multiple manufacturers.
   6. The IP Video Management System shall support standard resolution and megapixel IP cameras.

7. The IP Video Management system shall have the ability to store images at rates between 1 frame per hour, to 30 frames per second. Multiple users shall be able to simultaneously view the same camera view or sequence. The system shall use multicast streaming video to allow multiple users to view the same video stream, though not necessarily synchronized with each other, without affecting the bandwidth of the network.
8. System hall allow time synchronized multiple camera view/playback with motion detection information (indicated by color borders or bars in video display).
9. All displays shall retain the camera's aspect ratio and accommodate 4:3, 16:9, or 16:10 monitor displays. Displayed images shall have the ability to adjust image resolution to QCIF (160x120), CIF (320x240), 4CIF (VGA 640x480) and up to 2,560 x 1,920 lines.
10. The system shall have the ability to store recorded video on the system's local hard drive or on a network Attached Storage (NAS), or on attached storage devices (USB, Firewire and SCSI) if so required. Storage system shall have the option of being configured for redundancy using RAID 5 or RAID 6 as protection against hard drive loss.
11. The Video Management System shall be scaleable to support any number of cameras with multiple consoles.
12. Video titling shall provide for camera site description (on/off), display time/date (on/off), set the display color (black-white), display a site message (on/off), and define the screen block position for the title.

B. The Video Management System shall provide 24 hour scheduler to activate and deactivate the following features on a per camera basis;
1. Bring cameras on/off line.
2. Sound audible alarm on motion detection within the camera's field of view.
3. Send e-mail, text page or SMS notification on motion or alarm events with and without video image attachment.
4. Start/stop recording an event from any indicated video source.
5. Start/stop and change patrolling sequences and move PTZ cameras to specified preset locations, if required.
6. Shall have the option of start recording on an event setup by the operator/administrator. This shall include digital inputs from cameras or other wired inputs attached to the system.

C. The IP Video Management System shall have the option of speeding up video recording frame rate on motion detection or on other detectable events.

D. System shall provide operator control of a PTZ enabled cameras. Controls shall include moving camera to a minimum of 25 presets and provide patrolling feature between preset positions. Camera shall have the ability to resume a prior position or function when operator has released control after a period of time.

E. Video Management System shall have advanced motion detection capabilities including;
1. Start recording images before motion is detected in the camera field of view, up to 999 seconds.
2. Stop recording when no motion is detected for an adjustable time period.
3. Adjust motion detection sensitivity levels for optimal recording management.
4. Adjustment of low light noise levels to avoid false motion detection.

5. Ability to include or exclude motion detection areas within the image on a per camera basis.
6. Ability to change the recording rate when motion is detected.
7. Provide digital zoom into pre-recorded images.
8. Export selected video and/or audio with synchronized date and time stamp, in JPEG or AVI formats. Other formats acceptable and may included proprietary validation encryption schemes with appropriate player/viewer provided by manufacture.
9. Print tool shall allow operator to print images to system printer with time stamp and or operator name and comments.

F. The IP Video Management System shall log all alarms and events in the system manager database.

G. The IP video management system shall allow for programming of alarms and associated incoming alarms with related parts of the system. This may include door contacts or PIR motion sensors devices used to trigger an alarm/event on the system.

H. System shall provide the following general alarm and notification via audible signal, system message or email/pager;
1. General system alarm
2. Low Video storage space.
3. Video loss, on a per camera basis.

I. The IP Video Management system shall utilize a system manager to provide user and database management. Users must be authenticated by the system to gain access to any part of the database.

J. The IP Video Management system shall provide for virtual matrix functionality, leveraging the IP network to switch any camera to any monitor as well as transmit alarms and other system messages to any console on the network. This gives the system the ability to Push Video to any monitor on the system based on an external event.

K. The system shall include an operator station console for local video surveillance management. Each operator station shall include the following features;
1. Operator station shall support at least 2 displays, one for live view and one for playback, search, exporting video and/or live video. Playback and search shall not interfere or eliminate the continuous and simultaneous viewing and recording of live video functions.
2. Shall display any active cameras on screen, up to a 8 x 8 matrix.
3. Shall allow operator to zoom, pan, tilt or focus any PTZ camera using the system mouse.
4. Shall allow automatic rotation of cameras in a hot-spot window.
5. Playback viewer shall provide the operator with the ability to skip forward and backward on a frame by frame basis, event by event and provide 3 levels of fast forward and fast backward playback. Viewer shall support multiple synchronized images from any camera.
6. Playback viewer shall provide graphical motion level bar for quick identification of motion events.

7. Playback viewer shall provide operator with search tools to find video sequences by date/time. A Smart Search function shall be provided to allow the operator to find motion in specified zones of the video, such as placement or removal of objects.

2.02 INDOOR/OUTDOOR FIXED DOME CAMERAS

A. Model Numbers:
1. Axis P33xx series or P13xx (with environmental enclosure).
2. Pelco IP110.
3. Approved equal.

B. The indoor/outdoor fixed dome cameras shall include a built-in 100Base-TX network interface for live streaming to a standard Web browser.

C. The network dome camera shall be integrated into the back box design to accept multiple camera options without modification.

D. The indoor/outdoor fixed dome system shall meet or exceed the following design and performance specifications;

E. ELECTRICAL SPECIFICATIONS
1. Connectors: RJ-45 for 100BASE-TX Auto MDI/MDI-X (optional composite video output port).
2. Cabling: CAT5 cable or better for 100BASE-TX.
3. Input Voltage: 24 VAC (18-36), PoE input voltage, or 8-20VDC (model dependant).
4. Power Consumption: <7.5 Watts, <13 Watts with heaters.
5. Alarm Input: 10 VDC maximum, 5 mA maximum.
6. Alarm Output: 0 to 15 VDC maximum, 75 mA maximum.

F. CAMERA SPECIFICATIONS
1. Imaging Device: 1/3” imager or ¼” CMOS (model dependant)
2. Picture Elements:

		NTSC	PAL
a.	Models	720 (H) x 540 (V)	720 (H) x 540 (V)
b.	models	768 (H) x 494 (V)	752 (H) x 582 (V)

3. Electronic Shutter Range: Auto (1/15–1/22,000).
4. Lens Type: Varifocal with auto iris.
5. Focal Length: (model dependant to suite application).
6. Operation:
   a. Iris: Auto (DC-drive).
   b. Focus: Manual.
   c. Zoom: Manual.
7. Minimum Illumination:
   a. Color: <= 0.8 lux, (F1.4, 40 IRE, AGC on, 75% scene reflectance).

G. VIDEO SPECIFICATIONS
1. Compression MPEG-4, MJPEG in Web viewing mode
2. Video Streams 3, simultaneous
3. Video Resolutions

	NTSC	PAL
a. 4CIF :	704 x 480	704 x 576
b. 2CIF:	704 x 240	704 x 288
c. CIF:	352 x 240	352 x 288
d. QCIF:	176 x 120	176 x 144

4. Bit Rate Configurable 20 kbps to 2 Mpbs per stream.
5. Web User Interface Web based interface for viewing HTTP, may require Java Runtime Environment (JRE™)
6. Video Access: Live video access from Web browser for as many as 10 video sources and 5 simultaneous users; unlimited number of users using multicast.
7. Minimum Web Browser Requirements:
   a. Operating System: PC (Intel® Pentium® 4 microprocessor, 1.6 GHz) with Windows® 98, Windows 2000, Windows XP SP 2 or higher.
   b. RAM: 512 MB
   c. Ethernet Card: 100 Mbps
   d. Web Browser: Microsoft® Internet Explorer® 5.5, or higher version Firefox® 1.5, or higher version.
   e. Screen Resolution: 1024 x 768 pixels or higher, 16- or 32-bit pixel color resolution.

H. ENVIRONMENTAL SPECIFICATIONS
1. Environment: Low temperature, indoor.
2. Operating Temperature: -50° to 122°F (-46° to 50°C); de-ices to 25°F (-4°C)
3. Thermostat Operation: Heater is thermostatically controlled to activate ON at <41°F (<5°C)

I. MECHANICAL SPECIFICATIONS
1. Light Attenuation: Smoked bubble, f/1.5 light loss; clear bubble, zero light loss.

J. PHYSICAL SPECIFICATIONS
1. Construction: Aluminum with steel camera mounting bracket and polycarbonate dome.
2. Cable Entries: 1, 0.75-inch (1.91 cm) NPT threaded opening on side or back.
3. Finish: Gray polyester powder coat.

2.03 VIDEO ENCODERS AND DECODERS

A. Model Numbers
1. Axis Q7404.
2. Axis Q7406.
3. Axis 243Q.

B. All encoders shall accommodate mounting into a standard EIA 19-inch rack or separately into a wall mount bracket. The rack unit shall provide a dual power supply or use a separate rack mountable power supply unit for powering multiple rack units.

C. The dual-stream video encoder shall transmit video, audio, and data (PTZ) over the IP network.

D. The dual-stream video encoder shall be a high performance, single to eight channel video encoding unit, and it shall be able to convert live analog video signals into dual MJPEG, MPEG-4 and/or H.264 streams. The video encoders shall accept NTSC or PAL video signals from fixed color/black-white cameras, PTZ cameras, low light cameras, or any other camera that provides a composite NTSC/PAL 1 Vp-p video signal.

E. The dual stream video encoder shall process up to 30 images per second (ips) per stream at 4CIF (720 x 480 NTSC or 720 x 576 PAL) resolution, and it shall use motion adaptive de-interlacing technology to reduce jitter in 4CIF images.

F. The dual-stream video encoder shall incorporate the ability to automatically serve the appropriate stream to a workstation, network decoder, or virtual console display based on the screen configuration of the display unit, without affecting the recording rate. This shall save on both CPU processing power required to display all the cameras in the given configuration as well as reduce the network bandwidth required to transmit all the cameras to the display device.

G. The video encoder shall offer alarm management for; motion, video loss, tampering and digital inputs.

H. Image settings to include Text overlay (OSD), compression level, aspect ratio correction, image color and brightness adjustments.

I. Encoder unit shall provide PTZ camera support through RS485 or RS422 ports, using Pelco D or Pelco P protocols, others protocols are optional. Must support buad rates to at least 9600 bps.

J. The video encoder shall provide optional support for audio compression at minimum of 8 KHz. Two-way, half duplex audio available on one channel.

K. Environmental Specifications
   1. Operating Temperature: 32° to 95° F (0° to 35°C) at unit air intake.
   2. Operational Humidity: 20% to 80%, non-condensing.

PART 3 EXECUTION

3.01 INSTALLATION

A. Encoder cable runs and any IP transmission shall be of Cat6 with matching RJ-45 crimp-type connectors, and shall be installed with a control crimp tool as specified by the connectors' manufacturer.

B. All video signals from cameras in the system shall be run to the closest respective IP security video system encoder. They shall also be secured in an electrical room or in a separate secured rack and connected to the IP network and recorded on the network video recorder.

3.02 POWER

A. Power supplies shall be provided, by this contractor, as required to provide proper operation of all components. For outdoor cameras, power junction boxes shall be provided with fuses inside for maintenance purposes.

B. 120 VAC power for computer, communication and network equipment shall be provided by the electrical contractor, only as specifically shown on the electrical systems drawings. Where not specifically indicated to be by others, the cost of all necessary work shall be provided by this contractor.

END OF SECTION

Project Manual

CHIPPEWA COUNTY
CITY / COUNTY BUILDING RENOVATION

Sault Ste. Marie, Michigan

April 9, 2012

OWNER

Chippewa County
319 Court St
Sault Ste. Marie, MI 49783

ARCHITECT

Landmark Design Group, PC
3900 Linden Avenue SE - Suite C
Grand Rapids, MI. 49548
(616) 956-0606 Phone
(616) 956-9406 Fax

DESIGN BUILDER

Gundlach Champion, Inc.
180 Traders Mine Road
Iron Mountain, MI 49801
(906) 779-2303 Phone
(906) 779-8947 Fax

STRUCTURAL ENGINEER

JDH Engineering, Inc.
3000 Ivanrest SW, Ste B
Grandville, MI 49418
(616) 531-6020 Phone
(616) 531-8637 Fax

MECH / ELECT ENGINEER

Morgan M. Landon, PE, LLC
1632 Leonard St, NW, Ste 201
Grand Rapids, MI 49504
(616) 890-9321 Phone
(616) 791-0968 Fax

Landmark Design Group, P.C.

GUNDLACH CHAMPION
SINCE 1898

PROJECT MANUAL
TABLE OF CONTENTS

A. ADVERTISEMENT FOR BIDS

B. NOTICE TO BIDDERS

C. INSTRUCTION TO BIDDERS

D. BID PROPOSAL FORM

E. SUBCONTRACT AGREEMENT
Standard Short Form of Agreement Between Design-Builder and Subcontractor
Exhibit E – Subcontractor Insurance Requirements
Sample Tri-Media Sub-Contractor Services Agreement

F. REFERENCE DOCUMENTS
Asbestos and Lead Table
Asbestos Assessment dated 3/1/89 by DeLisle Associates, LTD (available upon request)
Asbestos Survey dated 2/15/09 by Mackinac Environmental (available upon request)

G. DIVISION 1 – GENERAL REQUIREMENTS

01010-	Summary of Work
01015-	Use of Premises
01019-	Contract Considerations
01040-	Coordination
01060-	Permits & Fees
01090-	References
01100-	Hazardous Materials
01200-	Project Meetings
01300-	Submittals
01400-	Quality Control
01500-	Construction Facilities and Temporary Controls
01600-	Materials and Equipment
01650-	Startup of Systems
01700-	Contract Closeout

H. SCOPES OF WORK

Bid Package	Bid Package Description
02000	Hazardous Material Abatement
06000	General Trades
07500	Membrane Roofing
09200	EIFS & Drywall
09500	Acoustical Ceilings
09600	Flooring
09900	Painting
15000	HVAC & Plumbing
16000	Electrical
17000	Security

J. SCHEDULE

A. ADVERTISEMENT FOR BIDS

A. ADVERTISEMENT FOR BIDS

Chippewa County - City / County Building Renovation

Owner	Architect / Engineer	Design-Builder
Chippewa County	Landmark Design Group, PC	Gundlach Champion, Inc.
319 Court St.	3900 Linden Ave SE, Ste. C	180 Traders Mine Road
Sault Ste. Marie, MI 49783	Grand Rapids, MI 49548	Iron Mountain, MI 49801
(906) 635-6330 p	(616) 956-0606 p	(906) 779-2303 p
	(616) 956-9406 f	(906) 779-8947 f

Notice is hereby given that sealed bids will be received by Chippewa County, County Administrator on or before May 1, 2012 at **4:00 pm local time.** Bid Proposals will be publically opened at 4:05 pm the same date in the Court Room on the 2nd Floor of the City/ County Building.

Proposals shall be submitted in accordance with Bid Documents dated April 9, 2012 prepared by the Design-Builder, Gundlach Champion, Inc. and the Architect/Engineer, Landmark Design Group, PC. Bid Proposals will be received for the following Bid Packages:

Bid Package	Bid Package Description
02000	**Hazardous Material Abatement**
06000	**General Trades**
07500	**Membrane Roofing**
09200	**EIFS & Drywall**
09500	**Acoustical Ceilings**
09600	**Flooring**
09900	**Painting**
15000	**HVAC & Plumbing**
16000	**Electrical**
17000	**Security**

Subcontract Bidders are required to bid the entire Bid Package.

The project location is 325 Court Street, Sault Ste. Marie, MI 49783.

Hard copies of the Bid Documents may be obtained from River City Reproductions (Phone 616-464-1220), 4039 40th St. SE, Grand Rapids, MI 49512, upon receipt of a $100.00 non-refundable. The check is to be made payable to Landmark Design Group, P.C. Bid Documents may be also viewed online at www.rivercityrepro.com, and available for viewing at plan rooms of the selected Builders Exchanges located in Upper and Lower Michigan, or at the office of the County Administrator.

There will be a Pre-Bid meeting held at 3:00 pm local time on April 17, 2012 at the Court Room located on the 2nd Floor of the City / County Building. All Bidders are encouraged to attend.

If the submitted bid is greater than $25,000, a Bid Security shall accompany bid in the form of a bid bond or certified check for no less than five (5%) percent of the Bid Price.

Gundlach Champion, Inc. is an equal opportunity employer.

B. NOTICE TO BIDDERS

B. NOTICE TO BIDDERS

1.00 BID DUE DATE AND TIME

Bid Package	Bid Package Description	Due Date
02000	Hazardous Material Abatement	May 1, 2012
06000	General Trades	May 1, 2012
07500	Membrane Roofing	May 1, 2012
09200	EIFS & Drywall	May 1, 2012
09500	Acoustical Ceilings	May 1, 2012
09600	Flooring	May 1, 2012
09900	Painting	May 1, 2012
15000	HVAC & Plumbing	May 1, 2012
16000	Electrical	May 1, 2012
17000	Security	May 1, 2012

Notes Regarding Bid Packages:

1. All bids are due by **4:00pm local time** on the date indicated unless otherwise changed by bid clarification. Any bid received after the designated time will be returned unopened.

2. Sealed bids will be received by the County Administrator at 319 Court Street, Sault Ste. Marie, MI 49783 and are to be addressed to the attention of Mr. Jim German. Envelope must be sealed with the Bidder's name on the outside of the envelope and designated as follows:

   Sealed Proposal
   Chippewa County – City / County Building Renovation
   319 Court Street, Sault Ste. Marie, MI 49783
   Attn: Mr. Jim German, County Administrator
   Bid Package:
   Subcontractor Name
   Address
   Phone Number

   Bids will be publically opened at **4:05 pm local time** in the Court Room on the 2nd Floor of the City / County Building.

3. Bidders are required to Bid the entire Bid Package. Bid Package Scopes of Work are included in the Project Manual, Section H. Bids will be accepted as single "Bid Packages", or "Combination Bid Packages" as determined to be in the Owner's best interest. If Subcontractors are bidding more than one Bid Package, the bids must be submitted in separate envelopes. Combination bids shall be submitted in separate envelopes.

4. Bidders are required to submit the Bid Proposal Forms **in duplicate**. The Bid Proposal Forms are included in the Project Manual, Section D.

5. Gundlach Champion, Inc. may elect to submit a competitive bid on selected Bid Packages.

2.00 CONTRACT DOCUMENTS

The Contract Documents in existence at time of bid consist of the following separate documents:

1. Project Manual, developed by Gundlach Champion, Inc. dated April 9, 2012
2. Technical Specifications, developed by Landmark Design Group, PC dated April 9, 2012
3. Plans, developed by Landmark Design Group, PC dated April 9, 2012.
4. All subsequent addendum and bid clarifications

All Subcontractors are hereby notified that the above listed separate documents constitute the Contract Documents. All Subcontractors are required to review these Contract Documents and treat them as one. All Subcontractors will be liable for information contained in these separate documents as if they were bound together and issued as one.

3.00 CLARIFICATIONS

The Project Manual takes precedence over references in the Specifications and Plans as to work performed by a particular Subcontractor. Precedence of documents for resolution of discrepancies shall be as follows, listed in decreasing order of precedence:

1. Standard Short Form of Agreement Between Design-Builder and Subcontractor
2. Amendment to the Project Manual
3. Project Manual
4. Amendment to Specifications
5. Specifications
6. Amendment to Drawings
7. Drawings

4.00 REFERENCE DOCUMENTS

A copy of the following document(s) is included in the Project Manual, Section F:

1. Asbestos and Lead Table

2. Hazardous material assessment(s) by DeLisle, Mackinaw Environmental and TriMedia are available upon request.

5.00 SCHEDULE

The following milestones are considered to be the late finish dates. Durations and logic may be revised to improve upon milestone and final completion dates.

Start Construction	Substantial Completion
June 2012	December 2012

A copy of the "Preliminary" Construction Schedule is included in the Project Manual, Section J.

C. INSTRUCTION TO BIDDERS

C. INSTRUCTION TO BIDDERS

1.00 DEFINITION OF THE PROJECT

1.01 Gundlach Champion Inc. is the Design-Builder. The Owner (Chippewa County) and Design-Builder (Gundlach Champion, Inc.) have a single contract wherein the Design-Builder undertakes the responsibility to provide design and construction of the project. Gundlach Champion has an agreement with the Architect/Engineer (Landmark Design Group, PC) to perform the design and related construction administration services. All other contractors on this project are considered Subcontractors. The Design-Builder will contract with the Subcontractor as an independent contractor to perform all work to complete a Bid Package. The Design-Builder will award separate contracts for all Bid Package proposals for furnishing of labor, material, equipment and all other items required to construct the following:

1.02 The overall Project consists of the partial renovation of three (3) floors of the City County Building. Work will be phased in order to accommodate staff remaining in the building. The demolition wili consist of removal and disposal of concrete walls, concrete floors, CMU walls, miscellaneous steel, doors, frames, hardware, flooring, mechanical, plumbing and electrical. Structural steel will support a connecting walkway to the 1999 Jail addition. New construction will be metal stud and drywall with painted finish on the interiors and exterior walls will be CMU with EIFS finish. There will be new flooring throughout the area of renovation including ceramic tile, VCT and carpet. New acoustical ceilings will be installed. Cooling will be provided throughout the building and upgrades to the heating system to provide air exchange. The electrical will be upgraded as well and security measures put in place for employee and visitor safety.

Design-Builder
Home Office:
Gundlach Champion, Inc.
180 Traders Mine Road
Iron Mountain, MI 49801
Phone: (906) 779-2303
Fax: (906) 779-8947

Field Office:
325 Court Street
Sault Ste. Marie, MI 49783

2.00 BIDDER'S PRESENTATIONS

2.01 It is understood and mutually agreed that by submitting a Proposal, the Bidder acknowledges the Work and has satisfied himself as to the nature and requirements of the Work.

2.02 It is further mutually agreed that the Bidder, by submitting a Proposal, acknowledges that he has satisfied himself as to the feasibility and correctness of the Contract Documents and that he accepts all the terms, conditions and stipulations contained herein, and that he will work in cooperation with other Subcontractors performing Work on the jobsite. The Bidder represents that he has visited the site and familiarized himself with the local conditions under which the Work is to be performed.

2.03 No verbal agreement or conversation with any office, agent, or employee of the Owner or Architect/Engineer, or the Design-Builder, either before or after the execution of a Contract, shall affect any of the terms, conditions or other obligations set forth in any of the Contract Documents.

2.04 Drawings and specifications are complementary and that which is called for by one shall be binding as if called for by both.

2.05 In case of difference between drawings of the same scale, or between large scale drawings, or between the drawings and the specifications or on the drawings in the specifications, the conflicts must be reported before bid due date, and that which requires the highest degree of performance

(quality, quantity, strength, finish, completion, complexity, sophistication, cost, etc.) will be required and shall be provided at no increase in bid amount if no written clarification issued. Addenda, which may be issued, will take precedence over drawings and specifications in case of conflict.

3.00 QUESTIONS, CLARIFICATIONS & INTERPRETATIONS

3.01 No oral explanation in regards to the meaning of the Contract Documents will be made and no oral instructions will be given before the award of the Contract. Discrepancies, omissions, questions, needs for clarification or interpretation or doubts as to the true meaning of the Contract Documents should be communicated in writing at once to the Design-Builder who shall thereafter notify the Architect/Engineer. The Design-Builder and/or the Architect/Engineer, with time permitting, will issue a written instruction in the form of an Addendum to all Bidders of record and its receipt by the Bidder must be listed on the Bid Proposal Form.

3.02 Every question or request for clarification or interpretation shall be sent to the Design-Builder in writing on the Bidder's Request for Information (RFI) form, which is attached. All RFI's are required to be submitted 72 hours in advance of the bid date and time.

4.00 STANDARDS, SUBSTITUTIONS & "APPROVED EQUALS"

4.01 All bids must be based on the brands specified or approved by Addendum.

4.02 The materials, products and equipment described in the Contract Documents establish a standard of required function, dimension, appearance and quality to be met by any proposed substitution.

4.03 To receive proper consideration, bids must be based on drawings and specifications without exception. Bidder may offer proposed substitutions as voluntary alternates with corresponding add or deduct on the Bid Proposal Form, but base bid must be based on Bid Documents without exception.

4.04 A statement setting forth any changes in other materials, equipment or work that incorporation of the substitute would require shall be included. The burden of proof of the merit of the proposed substitute is upon the proposer. The Design-Builder will recommend approval or disapproval to the Owner of each proposed substitution.

5.00 ADDENDA

5.01 All addenda issued before bids are received shall be included in the bid, and upon execution of a Contract, shall be a part thereof. Bidders shall list Addenda received in the appropriate space provided on the Bid Proposal Form. Failure of any Bidder to receive such Addenda shall not relieve the Bidder from any obligations under his bid as submitted. All Addenda issued shall become part of the Contract Documents. No addendum shall be issued within 24 hours of the bid date.

6.00 PREPARATION OF PROPOSALS

6.01 Proposals **must** be submitted on the prescribed forms in **Duplicate**. Each Bid Package must be bid on separate Bid Proposal Forms.

6.02 Unit Price Proposals are required if set forth in the Bid Proposal Form, Scope of Work or Contract Documents.

6.03 Each proposal shall be submitted on the designated form, or copies thereof, and shall be signed in ink. Erasures or other changes in a Proposal must be explained or noted over the signature of the Bidder. Proposals containing any conditions, omissions, unexplained erasures or alterations,

or items not called for in the Form of Proposal, or irregularities of any kind, may be rejected by the Owner.

6.04 Each copy of the Proposal shall include the legal name of the Bidder and a statement whether the Bidder is a sole proprietor, a partnership, a corporation, or any other legal entity, and each copy shall be signed by the person or persons legally authorized to bind the Bidder to a Contract.

6.05 If the submitted bid is over $25,000, a Bid Security shall accompany the bid in the form of a Certified Check, Cashier Check or Bid Bond payable to Gundlach Champion, Inc. for no less than five (5%) of the Base Bid.

7.00 MODIFICATION OR WITHDRAWAL OF BID

7.01 A bid may not be modified, withdrawn or canceled by the Bidder during the stipulated time period following the time and date designated for the receipt of bids, and Bidder so agrees in submitting his bid.

7.02 Prior to the time and date designated for receipt of bids, bids submitted early may be modified or withdrawn only by notice to the party receiving bids at the place and prior to the time designated for receipt of bids. Such notice shall be in writing over the signature of the Bidder. It shall be so worded as not to reveal the amount of the original bid.

7.03 Withdrawn bids may be resubmitted up to the time designated for the receipt of bids provided that they are then fully in conformance with these Instructions to Bidders.

8.00 CONSIDERATION OF PROPOSALS

8.01 The Owner shall have the right to reject any or all bids and in particular to reject a bid not accompanied by data required by the Bidding Contract Documents or a Proposal in any way incomplete or irregular. The Owner shall have the right to waive any informality or irregularity in any Proposal received.

8.02 The Owner reserves the right to reject any and all Proposals when such rejection is in the interest of the Owner, or to reject the bid of a Bidder who, in the Owner's opinion, is not qualified to fulfill the contract.

8.03 Each bidder agrees to waive any claim it has or may have against the Owner, Design-Builder, Architect/Engineer, and their respective employees, arising out of or in connection with the administration, evaluation, or recommendation of any bid.

8.04 Refer to Chippewa County Purchasing Policy for other stipulations.

9.00 ALTERNATES

9.01 Definition: An alternate is an amount proposed by Bidders and stated on the Bid Form that will be added to or deducted from Base Bid amount if the Owner decides to accept a corresponding change in either scope of work or in products, materials, equipment, systems or installation methods described in Contract Documents.

9.02 The Bidder must bid the Alternate as the Alternate pertains to the Bid Package.

9.03 Each Bidder is required to coordinate related work and modify or adjust surrounding work, as it pertains to their Bid Package, as required to ensure that work affected by each accepted alternate is complete and fully integrated into the project.

Each Bidder, as it pertains to their Bid Package, is to include as part of each alternate, miscellaneous devices, appurtenances and similar items incidental to or required for a complete installation whether or not mentioned as part of the alternate.

9.04 The Alternates quoted will be reviewed, and the Owner shall have the right to accept or reject Alternates in any order or combination.

9.05 Notification: Immediately following award of Subcontract, notification of the status of each alternate will be prepared and distributed to each party involved. Indication whether alternates have been accepted, rejected or deferred for consideration at a later date will be provided. A complete description of negotiated modifications to alternates, if any, will also be included.

9.06 Schedule of Alternates: The "Schedule of Alternates" is depicted below. Specification sections referenced in the schedule contain requirements for materials and methods necessary to achieve the work described under each alternate.

1. Deduct all labor material and equipment for demolition and remodeling of Basement Floor Rooms 130, 131, 132, 133, 134, 135, 136, 137, 138, 139 and 142.

2. Deduct all labor material and equipment of First Floor Rooms 201, 202, 203, 204, 205, 207, 208, 209, 210, 211, 212, 213, 214, 215, 217, 221, 222, 223, 224, 225, 228, 229, 230, 231, 239, 240, 241, 242, 243, 244, 246, 271, 274, 275, 279, 280, 287, and 288.

10.00 CASH ALLOWANCES

10.01 Cash Allowances: To provide adequate budget and bonding to cover items not precisely determined by the Owner prior to bidding, the bidder is to include in their base bid the amounts identified in the Cash Allowance Schedule depicted below.

10.02 Cash Allowance Schedule:

1. 06000 – General Trades – Enclosures and Temporary Partitions - $20,000

2. 06000 – General Trades – Dumpsters for Demolition Materials and Construction Debris - $10,000

11.00 QUALIFICATIONS OF BIDDERS

11.01 The Owner and Design-Builder reserve the right to request an audited, current (within 6 months) financial statement together with a statement of past experience, personnel, machinery, and equipment available to perform the proposed Work from any Bidder considered for award of a Contract. Failure or refusal to furnish such a statement or statements, to provide such information or to provide a satisfactory statement of financial responsibility, may constitute a basis for disqualifying the Bidder.

11.02 Corporate Bidders to be eligible to enter into a Contract shall be qualified to do business in the location corresponding to project location. Bidders shall comply with all applicable licensing requirements. Foreign corporations, which have not domesticated or otherwise become licensed in the State, shall obtain a permit to do business pursuant to Local requirements.

12.00 SUB-SUBCONTRACTORS

12.01 Each Bidder is specifically advised that any person, firm or other party to whom the Bidder proposes to award a Sub-Subcontract must be acceptable to the Design-Builder and Owner.

13.00 AFFIRMATIVE ACTION AND MBE/WBE/DBE PARTICIPATION

13.01 All Bidders shall ensure that employees and applicants for employment are not discriminated against because of their race, color, religion, sex, origin, age, marital status, sexual orientation, or disability and in conformance with local, state and federal regulations.

13.02 The Design-Builder will ensure that in regard to any contract entered into pursuant to this bid package, minority and women owned business enterprises will be afforded full opportunity to submit bids in response to the request for proposal and will not be discriminated against on the grounds of race, creed, color, sex, age, non-disqualifying handicap, religion, ancestry, marital status, national origin, place of birth or sexual preference.

14.00 POST- BID INFORMATION

14.01 Each Bidder, by submitting a Proposal, agrees to meet with the Owner and Design-Builder, if so requested, prior to an award. The purpose of such a meeting is to review:

a. Bidders quantities, manpower, scheduling and shop drawing submittals.

b. Bidders proposed subcontractors and material and equipment suppliers, and all materials to be used.

c. Bidders understanding of General Conditions and Contract Documents.

d. Safety, temporary facilities and site conditions.

e. Possible material/method alternatives.

f. Possible overlap of work items.

g. Project administration and Quality Control.

h. Alternates to be accepted and contract amount, unit prices, terms, retainage, payment and accounting procedures and forms.

i. Bidders questions and recommendations.

j. Schedule of Values

k. Insurance Certificates.

m. Gundlach Champion Subcontractor Prequalification Form

15.00 CONTRACT AWARD

15.01 Within seven (7) days of the Letter of Intent, the successful Subcontractor Bidder shall:

a. Submit a list of the names of all proposed subcontractors and material and equipment suppliers, and a list of all materials to be used. Furnish a complete listing of all required submittals and submittal dates.

b. Meet and provide input as required to allow the Design-Builder to further develop the "Preliminary" Construction Schedule in the bid documents into a more detailed CPM Schedule incorporating all contractual requirements "For Construction" and overall project management. Reference the Project Manual for the schedule.

16.00 INSURANCE

16.01 Reference the Project Manual, Section E, Subcontract Agreement, for insurance requirements.

17.00 PREVAILING WAGE RATES

17.01 Prevailing wages are not required for this project.

18.00 TAXES

18.01 The Subcontractor shall pay all State and Federal taxes levied on its business, income or property, including but not limited to taxes on the Subcontractor's gross or net receipts or income. Subcontractor shall be solely responsible for such payments and shall indemnify Owner and hold it harmless for any assessment and payment of same.

19.00 SUBCONTRACT AGREEMENT

19.01 Each Bidder, by submitting a proposal, agrees to execute the "Standard Short Form of Agreement Between Design-Builder and Subcontractor" (See Section E of the Project Manual).

19.02 Each Bidder, shall be held responsible for having familiarized themselves with the Agreement between the Owner and Design-Builder (prime agreement) and other documents affecting their contracts in this project manual. The prime agreement is on file at the Design-Builder's office and will be made available upon request.

BIDDER'S REQUEST FOR INFORMATION

TO: Gundlach Champion Inc.
Attn: Stan Kaczmarek
180 Traders Mine Road
Iron Mountain, MI 49801
Fax No. (906) 779-8947
skaczmarek@gcfirst.com

PROJECT: Chippewa County -
City / County Building Renovation

REFERENCE:
Drawing _____
Detail _____
Specification _____

DISCIPLINE:
Architectural _____
Mechanical _____
Electrical _____
Structural _____
Civil _____

QUESTION:

POSSIBLE SOLUTION:

Company: _____

By: _____
Fax No.: _____
Phone No.: _____

REPLY:

Gundlach Champion, Inc.

By: _____

Date.: _____

Landmark Design Group, PC

By: _____

Date.: _____

D. BID PROPOSAL FORM

D. BID PROPOSAL FORM

DATE: _____

TO: Chippewa County
319 Court Street
Sault Ste. Marie, MI 49783

PROJECT: Chippewa County
City / County Building Renovation

ATTN: Mr. Jim German

DESIGN-BUILDER: Gundlach Champion, Inc.

ARCHITECT: Landmark Design Group, PC

FROM:

Name of Bidder:_____

Bid Package(s):_____

The Bidder, in compliance with the Advertisement for Bids for construction of the **Chippewa County – City / County Building Renovation,** has examined the Contract Documents prepared by Gundlach Champion, Inc. and Landmark Design Group, PC, and all other related documents and being familiar with the site of the proposed project including availability of materials and labor and weather conditions, hereby proposes to perform all work, provide all labor, and furnish all materials to construct the work in the bid package(s) stated in accordance with the Contract Documents for the amount stated below. These prices are to cover all expenses incurred in performing work required for this Bid Package(s) under the contract documents.

The Bidder agrees to perform all work for the bid package(s) as described in the contract documents, for the base bid stated below. The cost of the Subcontractor

If bidding more than one Bid Package, the proposals must be submitted in separate envelopes. Combination bids shall also be submitted in separate envelopes.

Bidder acknowledges receipt of the following addenda:

Addendum No. _____ Dated: _____

Addendum No. _____ Dated: _____

Addendum No. _____ Dated: _____

Addendum No. _____ Dated: _____

Addendum No. _____ Dated: _____

BASE BID:

Bid Package(s) _____

Bid Package Description(s) _____

Base Bid $_____

Amount in Words _____Dollars.

ALTERNATES: Bidders must bid the following alternates, including all applicable taxes and fees, as the alternate pertains to their Bid Package.

No.	Description	Amount
1	Deduct all labor material and equipment for demolition and remodeling of Basement Floor Rooms 130, 131, 132, 133, 134, 135, 136, 137, 138, 139 and 142.	$_____
2.	Deduct all labor material and equipment of First Floor Rooms 201, 202, 203, 204, 205, 207, 208, 209, 210, 211, 212, 213, 214, 215, 217, 221, 222, 223, 224, 225, 228, 229, 230, 231, 239, 240, 241, 242, 243, 244, 246, 271, 274, 275, 279, 280, 287, and 288.	$_____

VOLUNTARY ALTERNATES: The bidder offers the following voluntary alternate(s). The undersigned agrees that the amounts indicated below shall be added to or deducted from the base bid, as the case may be, for each alternate that is accepted.

Bid Package	Written Description of Voluntary Alternates	Add	Deduct
_____	_____	$_____	$_____
	_____		
_____	_____	$_____	$_____
	_____		
_____	_____	$_____	$_____
	_____		

TAXES:

All applicable taxes are included in the above base bid, alternates and voluntary alternates. This project is subject to State Sales Tax and Use Tax on all material and supplies incorporated and used in the construction of the work. Incorporate any of these taxes in the bids.

Bid Security in the form of checks shall be made payable to Gundlach Champion, Inc. Indicate which of the following accompanies this proposal in the amount of five (5) percent of the bid amount:

☐ Bid Security by a qualified surety in the form of certified check
☐ Cashier check
☐ Bid Bond

Bidder agrees that this bid shall be good and may not be withdrawn for a period of 45 calendar days after the bid due date. If a Notice to Proceed/Letter of Intent or a prepared agreement provided by the Design-Builder is received by the bidder, the bidder will within fifteen (10) days of such receipt, acknowledge acceptance of the contract award and will, complete and return a Prequalification Form and the Certificates of Insurance.

The Bid Security becomes the property of the Design-Builder as liquidated damages for delay and additional expense in the event a contract agreement is not executed; the prequalification form, and/or certificates of insurance are not delivered within the time set forth above.

Bidder understands that the Owner reserves the right to reject any or all bids and to waive any informalities or irregularities.

If awarded a contract, the bidder's surety will be:_____

The undersigned agree to the provisions of the contract documents and hereby affix authorized signature representing (check one):

☐ An individual doing business as:_____
☐ A partnership
☐ A corporation

Signature: _____

Print Name: _____Title:_____

Name of Firm:_____

Business Address:_____

Telephone No.: (_____)_____

Fax No. : (_____)_____

E. SUBCONTRACT AGREEMENT

THE ASSOCIATED GENERAL CONTRACTORS OF AMERICA

CONSENSUSDOCS 751

STANDARD SHORT FORM AGREEMENT BETWEEN DESIGN-BUILDER AND SUBCONTRACTOR

This document was developed through a collaborative effort of entities representing a wide cross-section of the construction industry. The organizations endorsing this document believe it represents a fair and reasonable consensus among the collaborating parties of allocation of risk and responsibilities in an effort to appropriately balance the critical interests and concerns of all project participants.

These endorsing organizations recognize and understand that users of this document must review and adapt this document to meet their particular needs, the specific requirements of the project, and applicable laws. Users are encouraged to consult legal, insurance and surety advisors before modifying or completing this document. Further information on this document and the perspectives of endorsing organizations is available in the ConsensusDOCS Guidebook.

Job No.:

Contract No.:

Phase No.:_____

This Agreement is made this _____ Day of , , by and between

DESIGN-BUILDER,

Gundlach Champion, Inc.

180 Traders Mine Road

PO Box 490

Iron Mountain, MI 49801

and

SUBCONTRACTOR,

IMPORTANT: A vertical line in the margin indicates a change has been made to the original text. Prior to signing, recipients may wish to request from the party producing the document a "redlined" version indicating changes to the original text. Consultation with legal and insurance counsel and careful review of the entire document are strongly encouraged.

ConsensusDOCS 751 • STANDARD SHORT FORM AGREEMENT BETWEEN CONTRACTOR AND SUBCONTRACTOR (Where Contractor Assumes Risk of Owner Payment) Copyright © 2007, ConsensusDOCS LLC; revised May 2009. YOU ARE ALLOWED TO USE THIS DOCUMENT FOR ONE CONTRACT ONLY. YOU MAY MAKE 9 COPIES OF THE COMPLETED DOCUMENT FOR DISTRIBUTION TO THE CONTRACT'S PARTIES. ANY OTHER USES, INCLUDING COPYING THE FORM DOCUMENT, ARE STRICTLY PROHIBITED.

PROJECT:

OWNER:

ARCHITECT/ENGINEER:

1. SUBCONTRACT WORK To the extent terms of the agreements between Owner and Design-Builder (collectively the prime agreement) apply or pertain to the work of Subcontractor, Design-Builder assumes toward Subcontractor all obligations, rights, duties, and redress that Owner assumes toward Design-Builder. In an identical way, Subcontractor assumes toward Design-Builder all obligations, rights, duties, and redress that Design-Builder assumes toward Owner and others under the prime agreement. In the event of conflicts or inconsistencies between provisions of this Agreement and the prime agreement, this Agreement shall govern. The Contractor's Work is the construction and services required of the Contractor to fulfill its obligations pursuant to its agreement with the Owner (the Work). The Subcontract Work is a portion of the Contractor's Work. Subcontractor shall perform Subcontract Work pursuant to this Agreement under the general direction of Design-Builder and shall cooperate with Design-Builder so Design-Builder may fulfill its obligations to Owner and others. Subcontractor shall provide Subcontract Work for the Project in accordance with the Progress Schedule to be prepared by Design-Builder after consultation with Subcontractor, and as it may be amended in accordance with this Agreement. Subcontractor shall give timely notices to authorities pertaining to Subcontract Work and shall be responsible for all submittals, permits, fees, licenses, assessments, inspections, testing and taxes necessary to complete Subcontract Work. Subcontractor to provide _____ (Brief Description of Subcontract Work), as more fully described in Exhibit A.

2. SUBCONTRACT AMOUNT Subject to other provisions of this Agreement Design-Builder agrees to pay Subcontractor for satisfactory and timely performance and completion of Subcontract Work: _____. Retainage shall be percent (%). The release of the Subcontractor's retainage is contingent upon the Owner's acceptance of the Subcontract Work and the completion of close-out requirements.

3. EXHIBITS The following Exhibits are incorporated by reference and made part of this Agreement:

IMPORTANT: A vertical line in the margin indicates a change has been made to the original text. Prior to signing, recipients may wish to request from the party producing the document a "redlined" version indicating changes to the original text. Consultation with legal and insurance counsel and careful review of the entire document are strongly encouraged.
ConsensusDOCS 751 • STANDARD SHORT FORM AGREEMENT BETWEEN CONTRACTOR AND SUBCONTRACTOR (Where Contractor Assumes Risk of Owner Payment) Copyright © 2007, ConsensusDOCS LLC; revised May 2009. YOU ARE ALLOWED TO USE THIS DOCUMENT FOR ONE CONTRACT ONLY. YOU MAY MAKE 9 COPIES OF THE COMPLETED DOCUMENT FOR DISTRIBUTION TO THE CONTRACT'S PARTIES. ANY OTHER USES, INCLUDING COPYING THE FORM DOCUMENT, ARE STRICTLY PROHIBITED.

EXHIBIT A: Subcontract Work, ___ pages, attached.

EXHIBIT B: Current Drawing List, (___) pages, attached. The list consists of Drawings, Project Manual, (Specifications, General, Special, Supplementary, other conditions and information) and addenda. The prime agreement will be furnished upon request. Some of the provisions of the prime agreement may be withheld.

EXHIBIT C: Progress Schedule, ___ pages, attached.

EXHIBIT D: Alternates, ___ pages.

EXHIBIT E: Insurance Provisions, 2 pages.

EXHIBIT F: Submittals, ___ pages, attached.

4. ETHICS The Design-Builder and the Subcontractor shall perform their obligations with integrity, ensuring at a minimum that: a) Conflicts of interest shall be avoided or disclosed promptly to the other Party; and b) the Design-Builder and the Subcontractor warrant that they have not and shall not pay nor receive any contingent fees or gratuities to or from the other Party, including their agents, officers and employees, Subcontractors or others for whom they may be liable, to secure preferential treatment.

5. SAFETY

5.1 The Subcontractor shall establish its own safety program implementing safety measures, policies and standards conforming to thoses required or recommended by governmental and quasi-governmental authorities having jurisdiction and by the Design-Builder and Owner, including, but not limited to, requirements imposed by this Agreement. The Subcontractor shall comply with the reasonable recommendations of insurance companies having an interest in the Project, and shall stop any part of the Subcontract Work which the Design-Builder deems unsafe until corrective measures satisfactory to the Design-Builder have been taken. If the Subcontractor fails to take such corrective measures, the Design-Builder may do so at the expense of the Subcontractor and may deduct the cost thereof from any payments due or to become due the Subcontractor. The Design-Builder's failure to stop the Subcontractor's unsafe practices or the Design-Builder's efforts to take corrective measures shall not relieve the Subcontractor of its responsibilities or liabilities. The Subcontractor shall notify the Design-Builder immediately following an accident and promptly confirm the notice in writing. A detailed written report shall be furnished if requested by the Design-Builder.

5.2 PROTECTION OF THE WORK The Subcontractor shall take necessary precautions to properly protect the Subcontract Work and the work of others from damage caused by the Subcontractor's operations. Should the Subcontractor cause damage to the Work or property of the Owner, the Design-Builder or others, the Subcontractor shall promptly remedy such damage to the satisfaction of the Design-Builder. If Subcontractor does not promptly remedy such damage to the satisfaction of the Design-Builder, the Design-Builder may remedy the damage and deduct its cost from any amounts due or to become due the Subcontractor, unless such costs are recovered under applicable property insurance.

5.2.1 All Subcontractors shall be responsible for communicating, upon discovery, water release or mold growth concerns to the Design-Builder. All Subcontractors shall ensure that building materials to be incoroporated into their scope of work are free from unusual moisture (less than 12% moisture) and all mold growth. Any materials abnormally wet, or exhibting signs of mold growth, shall not be used until dried, treated or replaced. All Subcontractors will cooperate with the Design-Builder in minimizing potential causes of moisture/water or mold growth conditions during its performance of the Subcontract Work.

IMPORTANT: A vertical line in the margin indicates a change has been made to the original text. Prior to signing, recipients may wish to request from the party producing the document a "redlined" version indicating changes to the original text. Consultation with legal and insurance counsel and careful review of the entire document are strongly encouraged.
ConsensusDOCS 751 • STANDARD SHORT FORM AGREEMENT BETWEEN CONTRACTOR AND SUBCONTRACTOR (Where Contractor Assumes Risk of Owner Payment) Copyright © 2007, ConsensusDOCS LLC; revised May 2009. YOU ARE ALLOWED TO USE THIS DOCUMENT FOR ONE CONTRACT ONLY. YOU MAY MAKE 9 COPIES OF THE COMPLETED DOCUMENT FOR DISTRIBUTION TO THE CONTRACT'S PARTIES. ANY OTHER USES, INCLUDING COPYING THE FORM DOCUMENT, ARE STRICTLY PROHIBITED.

5.3 CLEANUP

5.3.1 The Subcontractor shall at all times during its performance of the Subcontract Work keep the worksite clean and free from debris resulting from the Subcontract Work. Subcontractor shall make provisions to minimize and confine dust and debris resulting from its construction activities.

5.3.2 The Subcontractor is responsible for the removal of debris and waste to a dumpster furnished by the Design-Builder. The cost of removal of debris and waste to a certified landfill, including dumping fees, as a result of the Subcontract Work is by the Design-Builder.

5.3.3 If the Subcontractor fails to commence compliance with cleanup duties within forty-eight (48) hours after written notification from the Design-Builder of non-compliance, the Design-Builder may implement appropriate cleanup measures without further notice and the cost thereof shall be deducted from any amounts due or to become due the Subcontractor.

5.3.4 Final Cleanup. Each Subcontractor shall execute final cleaning prior to final inspection in accordance with manufacturer's recommendation and as required within the technical sections of the specifications governing work under their Subcontract.

5.4 CORRECTION OF WORK Subcontractor agrees to correct, after receipt of a written notice from the Design-Builder, all Subcontract work performed under this Agreement which proves to be defective in workmanship or materials within a period of one year from the date of Substantial Completion established for the Project, or for a longer period of time as may be required by specific warranties in this Agreement.

5.4.1 If the Subcontractor's correction or removal of Subcontract work destroys or damages completed or partially completed work of the Owner, the Design-Builder or any separate contractors, the Subcontractor shall be responsible for the cost of correction of such damaged or destroyed construction.

6. ASSIGNMENT Subcontractor shall not assign the whole or any part of its Subcontract Work or this Agreement without prior written approval of Design-Builder.

7. TIME

7.1 SCHEDULE In consultation with Subcontractor, the Design-Builder shall prepare the schedule for performance of Design-Builder's work (Progress Schedule) and shall revise and update such schedule, as necessary, as Design-Builder's work progresses. Subcontractor shall provide Design-Builder with any scheduling information proposed by Subcontractor for Subcontract Work and shall revise and update as Project progresses. Design-Builder and Subcontractor shall be bound by the Progress Schedule. The Progress Schedule and all subsequent changes and additional details shall be submitted to Subcontractor reasonably in advance of required performance. Design-Builder shall have the right to determine and, if necessary, change the time, order and priority in which various portions of Subcontract Work shall be performed and all other matters relative to Subcontract Work.

8. CHANGE ORDERS When Design-Builder orders in writing, Subcontractor, without nullifying this Agreement, shall make any and all changes in Subcontract Work, which are within the general scope of this Agreement. Any adjustment in the Subcontract Amount or time of performance shall be authorized by a Change Order. No adjustments shall be made for any changes performed by Subcontractor that have not been ordered in writing by Design-Builder. A Change Order is a written instrument prepared by Design-Builder and signed by Subcontractor stating their agreement upon the change in Subcontract

IMPORTANT: A vertical line in the margin indicates a change has been made to the original text. Prior to signing, recipients may wish to request from the party producing the document a "redlined" version indicating changes to the original text. Consultation with legal and insurance counsel and careful review of the entire document are strongly encouraged.
ConsensusDOCS 751 • STANDARD SHORT FORM AGREEMENT BETWEEN CONTRACTOR AND SUBCONTRACTOR (Where Contractor Assumes Risk of Owner Payment) Copyright © 2007, ConsensusDOCS LLC; revised May 2009. YOU ARE ALLOWED TO USE THIS DOCUMENT FOR ONE CONTRACT ONLY. YOU MAY MAKE 9 COPIES OF THE COMPLETED DOCUMENT FOR DISTRIBUTION TO THE CONTRACT'S PARTIES. ANY OTHER USES, INCLUDING COPYING THE FORM DOCUMENT, ARE STRICTLY PROHIBITED.

Work. If commencement or progress of Subcontract Work is delayed without the fault or responsibility of Subcontractor, the time for Subcontract Work shall be extended by Change Order to the extent obtained by Design-Builder, and the Progress Schedule shall be revised accordingly. No change in the Subcontract Work, whether by way of alteration or addition to the Subcontract Work, shall be the basis of an addition to the Subcontract Amount or change in the Subcontract time of performance unless and until such alteration or addition has been authorized by a Change Order executed and issued in accordance with this Agreement.

8.1 The allowable Fee (overhead and profit) for added Subcontract Work by Subcontractor's own forces shall not exceed _____ percent (__%) of additional cost. For added Subcontract Work to be performed by any Subcontractor's subcontractor, the allowable Subcontractor's Fee shall not exceed _____ percent (__%) on this added cost of Subcontract Work. For added Subcontract Work performed by any nominated subcontractor, regardless of tier, the nominated, performing subcontractor's allowable Fee shall not exceed _____ percent (__%) of additional cost. For added Subcontract Work performed by any nominated subcontractor, regardless of tier, the corresponding higher tier subcontractor(s) shall limit their Fee to not exceed _____ percent (__%) of the performing lower tier subcontractor's cost of the Subcontract Work, including the lower tier subcontractor's Fee.

8.2 When both additions and credits covering changes in the Subcontract Work or substitutions are involved in a change, the allowable Fee shall be calculated on the basis of net increase, if any, with respect to that change.

8.3 On any change in the Work which involves a net credit to the Owner, no Fee allowance shall be figured.

9. PAYMENT

9.1 SCHEDULE OF VALUES As a condition of payment, Subcontractor shall provide a schedule of values satisfactory to Design-Builder not more than ten (10) Days from the date of this Agreement.

9.2 PROGRESS AND FINAL PAYMENTS Progress payments, less retainage, shall be made to Subcontractor, for Subcontract Work satisfactorily performed, no later than fourteen (14) Days after receipt by Design-Builder of payment from Owner for Subcontract Work. Final payment of the balance due shall be made to Subcontractor no later than fourteen (14) Days after receipt by Design-Builder of final payment from Owner for Subcontract Work. These payments are subject to receipt of such lien waivers, affidavits, warranties, guarantees or other documentation required by this Agreement or in form or substance acceptable to Design-Builder.

9.3 PAYMENTS WITHHELD Design-Builder may reject a Subcontractor payment application or nullify a previously approved Subcontractor payment application, in whole or in part, as may reasonably be necessary to protect Design-Builder from loss or damage caused by Subcontractor's failure to (1) timely perform Subcontract Work, (2) properly pay subcontractors or suppliers, or (3) promptly correct rejected, defective or nonconforming Subcontract Work, (4) third party claims involving the Subcontractor or reasonable evidence demonstrating that third party claims are likely to be filed unless and until the Subcontractor furnishes the Design-Builder with adequate security in the form of a surety bond, letter of credit or other collateral or commitment which are sufficient to discharge such claims if established.

9.4 PAYMENT DELAY If Design-Builder has received payment from Owner and, if for any reason not the fault of Subcontractor, Subcontractor does not receive a progress payment from Design-Builder within fourteen (14) Days after the date such payment is due, or if Design-Builder has failed to pay Sub-contractor within a reasonable time for Subcontract Work satisfactorily performed,

IMPORTANT: A vertical line in the margin indicates a change has been made to the original text. Prior to signing, recipients may wish to request from the party producing the document a "redlined" version indicating changes to the original text. Consultation with legal and insurance counsel and careful review of the entire document are strongly encouraged.
ConsensusDOCS 751 • STANDARD SHORT FORM AGREEMENT BETWEEN CONTRACTOR AND SUBCONTRACTOR (Where Contractor Assumes Risk of Owner Payment) Copyright © 2007, ConsensusDOCS LLC; revised May 2009. YOU ARE ALLOWED TO USE THIS DOCUMENT FOR ONE CONTRACT ONLY. YOU MAY MAKE 9 COPIES OF THE COMPLETED DOCUMENT FOR DISTRIBUTION TO THE CONTRACT'S PARTIES. ANY OTHER USES, INCLUDING COPYING THE FORM DOCUMENT, ARE STRICTLY PROHIBITED.

Subcontractor, upon giving fourteen (14) Days' written notice to Design-Builder, and without prejudice to and in addition to any other legal remedies, may stop work until payment of the full amount owing to Subcontractor has been received. Subcontract Amount and time of performance shall be adjusted by the amount of Subcontractor's reasonable and verified cost of shutdown, delay and startup, and shall be affected by an appropriate Change Order.

9.5 WAIVER OF CLAIMS Final payment shall constitute a waiver of all claims by Subcontractor relating to Subcontract Work, but shall in no way relieve Subcontractor of liability for warranties, or for nonconforming or defective work discovered after final payment.

9.6 OWNER'S ABILITY TO PAY

9.6.1 Subcontractor shall have the right upon request to receive from Design-Builder such information as Design-Builder has obtained relative to Owner's financial ability to pay for Design-Builder's work, including any subsequent material variation in such information. Design-Builder, however, does not warrant the accuracy or completeness of information provided by Owner.

9.6.2 If Subcontractor does not receive the information referenced in Subparagraph 9.6.1, Subcontractor may request information from Owner or Owner's lender.

10. INDEMNITY To the fullest extent permitted by law, Subcontractor shall defend, indemnify and hold harmless Design-Builder, Design-Builder's other subcontractors, Architect/Engineer and Owner, and their respective agents, consultants, employees and others as required by this Agreement, from all claims, actions, demands, and liabilities for bodily injury and property damage, including all related fines, penalties, costs and expenses (including without limitation, costs of experts, court costs and attorney's fees) that may at any time (including after final completion of the Subcontract Work or the Project) arise from or are in any way attributable to the performance or non-performance of Subcontract Work to the extent of the negligence or misconduct attributed to such acts or omissions by Subcontractor, Subcontractor's subcontractors, or anyone employed directly or indirectly by any of them or by anyone for whose acts any of them may be liable. This indemnity shall apply even if the claim, action, demand or liability with respect to which indemnity is sought is attributable to or caused in part by or results in part from the negligence, strict liability, misconduct or fault of an indemnified party.

10.1 If Subcontractor, Subcontractor's subcontractors, or anyone employed directly or indirectly by any of them or anyone for whose acts any of them may be liable, by rental, loan, or otherwise, makes use of any of the Design-Builder's tools, construction equipment, scaffolding or other appliances, Subcontractor agrees (a) that all such items are accepted and used "AS IS, WITH ALL FAULTS", (b) that such use shall be at the sole risk of Subcontractor and any other party using such items, and (c) to the fullest extent permitted by law, to defend, indemnify and hold harmless the Design-Builder, the Design-Builder's other subcontractors, the Architect/Engineer and the Owner, and their respective agents, consultants, employees and others as required by this Agreement, from all claims, actions, demands, and liabilities for bodily injury and property damage, including all related fines, penalties, costs and expenses (including without limitation, costs of experts, court costs and attorney's fees) that may at any time (including after final completion of the Subcontract Work or the Project) arise from or are in any way attributable to such use of Design-Builder's tools, equipment, scaffolding or other appliances. This indemnity shall apply even if the claim, action, demand or liability with respect to which indemnity is sought is attributable to or caused in part by or results in part from the negligence, strict liability, misconduct or fault of an indemnified party.

11. INSURANCE

IMPORTANT: A vertical line in the margin indicates a change has been made to the original text. Prior to signing, recipients may wish to request from the party producing the document a "redlined" version indicating changes to the original text. Consultation with legal and insurance counsel and careful review of the entire document are strongly encouraged.
ConsensusDOCS 751 • STANDARD SHORT FORM AGREEMENT BETWEEN CONTRACTOR AND SUBCONTRACTOR (Where Contractor Assumes Risk of Owner Payment) Copyright © 2007, ConsensusDOCS LLC; revised May 2009. YOU ARE ALLOWED TO USE THIS DOCUMENT FOR ONE CONTRACT ONLY. YOU MAY MAKE 9 COPIES OF THE COMPLETED DOCUMENT FOR DISTRIBUTION TO THE CONTRACT'S PARTIES. ANY OTHER USES, INCLUDING COPYING THE FORM DOCUMENT, ARE STRICTLY PROHIBITED.

11.1 SUBCONTRACTOR'S INSURANCE Before commencing the Subcontract Work, and as a condition of payment, the Subcontractor shall purchase and maintain insurance that will protect it from the claims arising out of its operations under this Agreement, whether the operations are by the Subcontractor, or any of its consultants or subcontractors or anyone directly or indirectly employed by any of them, or by anyone for whose acts any of them may be liable.

11.2 MINIMUM LIMITS OF LIABILITY The Subcontractor shall procure and maintain, with insurance companies licensed in the jurisdiction in which the Project is located and acceptable to the Design-Builder, which acceptance shall not be unreasonably withheld, at least the limits of liability as set forth in Exhibit E.

11.3 NUMBER OF POLICIES Commercial General Liability Insurance and other liability insurance may be arranged under a single policy for the full limits required or by a combination of underlying policies with the balance provided by an Excess or Umbrella Liability Policy.

11.4 CANCELLATION, RENEWAL AND MODIFICATION The Subcontractor shall maintain in effect all insurance coverages required under this Agreement at the Subcontractor's sole expense and with insurance companies acceptable to the Design-Builder, which acceptance shall not be unreasonably withheld. The policies shall contain a provision that coverage will not be cancelled or not renewed until at least thirty (30) Days' prior written notice has been given to the Design-Builder. Certificates of insurance showing required coverage to be in force pursuant to Subparagraph 11.2 shall be filed with the Design-Builder prior to commencement of the Subcontract Work. In the event the Subcontractor fails to obtain or maintain any insurance coverage required under this Agreement, the Design-Builder may purchase such coverage as desired for the Design-Builder's benefit and charge the expense to the Subcontractor, or terminate this Agreement.

11.5 CONTINUATION OF COVERAGE The Subcontractor shall continue to carry Completed Operations Liability Insurance as set forth in Exhibit E. Prior to commencement of the Work, Subcontractor shall furnish the Design-Builder with certificates evidencing the required coverages.

11.6 PROPERTY INSURANCE Upon written request of the Subcontractor, the Design-Builder shall provide the Subcontractor with a copy of the Builder's Risk Policy of insurance or any other property or equipment insurance in force for the Project and procured by the Owner or Design-Builder.

11.6.1 If the Owner or Design-Builder has not purchased property insurance reasonably satisfactory to the Subcontractor, the Subcontractor may procure such insurance as will protect the interests of the Subcontractor, its subcontractors and their subcontractors in the Subcontract Work.

11.6.2 If not covered under the Builder's Risk Policy of insurance or any other property or equipment insurance required by the Subcontract Documents, the Subcontractor shall procure and maintain at the Subcontractor's own expense property and equipment insurance for the Subcontract Work including portions of the Subcontract Work stored off the site or in transit, when such portions of the Subcontract Work are to be included in an application for payment.

11.7 WAIVER OF SUBROGATION The Design-Builder and Subcontractor waive all rights against each other, the Owner and the Architect/Engineer, and any of their respective consultants, subcontractors, and sub-subcontractors, agents and employees, for damages caused by perils to the extent covered by the proceeds of the insurance provided in Paragraph 11.6, except such rights as they may have to the insurance proceeds. The Subcontractor shall require similar waivers from its subcontractors. If the policies of insurance referred to in this Article require an endorsement to provide for continued coverage where there is a waiver of subrogation, the owners of such policies

IMPORTANT: A vertical line in the margin indicates a change has been made to the original text. Prior to signing, recipients may wish to request from the party producing the document a "redlined" version indicating changes to the original text. Consultation with legal and insurance counsel and careful review of the entire document are strongly encouraged.
ConsensusDOCS 751 • STANDARD SHORT FORM AGREEMENT BETWEEN CONTRACTOR AND SUBCONTRACTOR (Where Contractor Assumes Risk of Owner Payment) Copyright © 2007, ConsensusDOCS LLC; revised May 2009. YOU ARE ALLOWED TO USE THIS DOCUMENT FOR ONE CONTRACT ONLY. YOU MAY MAKE 9 COPIES OF THE COMPLETED DOCUMENT FOR DISTRIBUTION TO THE CONTRACT'S PARTIES. ANY OTHER USES, INCLUDING COPYING THE FORM DOCUMENT, ARE STRICTLY PROHIBITED.

will cause them to be so endorsed.

11.8 DESIGN-BUILDER'S LIABILITY INSURANCE The Design-Builder shall obtain and maintain its own liability insurance for protection against claims arising out of the performance of this Agreement, including without limitation, loss of use and claims, losses and expenses arising out of the Design-Builder's negligence.

11.9 ADDITIONAL LIABILITY COVERAGE Design-Builder (___) shall/(__) shall not (indicate one) require Subcontractor to purchase and maintain liability coverage, primary to Design-Builder's coverage under Subparagraph 11.8.

11.9.1 If required by Subparagraph 11.9, the additional liability coverage required of the Subcontractor shall be as specified in Exhibit E.

12. BONDS Subcontractor ( ) shall ( ) shall not furnish to Design-Builder, as Obligee, surety bonds.

13. RISK OF LOSS Except to the extent a loss is coverage by applicable insurance, risk of loss and/or damage to the Subcontract Work shall be upon the Subcontractor until the Date of Substantial Completion, unless otherwise agreed to by the Parties.

14. DESIGN-BUILDER'S RIGHT TO PERFORM SUBCONTRACTOR'S RESPONSIBILITIES AND TERMINATION OF AGREEMENT

14.1 FAILURE OF PERFORMANCE Should Subcontractor fail to satisfy contractual deficiencies or to commence and continue satisfactory correction of the default with diligence or promptness within three (3) business Days from receipt of Design-Builder's written notice, then Design-Builder, without prejudice to any right or remedies, shall have the right to take whatever steps it deems necessary to correct deficiencies and charge the cost thereof to Subcontractor, who shall be liable for such payment, including reasonable overhead, profit and attorneys' fees. In the event of an emergency affecting safety of persons or property, Design-Builder may proceed as above without notice, but Design-Builder shall give Subcontractor notice promptly after the fact as a precondition of cost recovery.

14.2 TERMINATION BY OWNER Should Owner terminate the prime agreement or any part which includes Subcontract Work, Design-Builder shall notify Subcontractor in writing within three (3) business Days of termination and, upon written notification, this Agreement shall be terminated and Subcontractor shall immediately stop Subcontract Work, follow all of Design-Builder's instructions, and mitigate all costs. In the event of Owner termination, Design-Builder liability to Subcontractor shall be limited to the extent of Design-Builder recovery on Subcontractor's behalf under the prime agreement. Design-Builder agrees to cooperate with Subcontractor, at Subcontractor's expense, in the prosecution of any Subcontractor claim arising out of Owner termination and to permit Subcontractor to prosecute the claim, in the name of Design-Builder, for the use and benefit of Subcontractor, or assign the claim to Subcontractor.

14.3 CONTINGENT ASSIGNMENT OF SUBCONTRACT AGREEMENTS

14.3.1 If prime agreement is terminated by Owner for cause, this Agreement shall be assigned by the Design-Builder to the Owner, subject to the prior rights of any surety, provided that:

14.3.1.1 the Owner accepts such assignment, after termination by notifying the Subcontractor and Design-Builder in writing, and assumes all rights and obligations of the Design-Builder pursuant to this subcontract agreement.

IMPORTANT: A vertical line in the margin indicates a change has been made to the original text. Prior to signing, recipients may wish to request from the party producing the document a "redlined" version indicating changes to the original text. Consultation with legal and insurance counsel and careful review of the entire document are strongly encouraged.
ConsensusDOCS 751 • STANDARD SHORT FORM AGREEMENT BETWEEN CONTRACTOR AND SUBCONTRACTOR (Where Contractor Assumes Risk of Owner Payment) Copyright © 2007, ConsensusDOCS LLC; revised May 2009. YOU ARE ALLOWED TO USE THIS DOCUMENT FOR ONE CONTRACT ONLY. YOU MAY MAKE 9 COPIES OF THE COMPLETED DOCUMENT FOR DISTRIBUTION TO THE CONTRACT'S PARTIES. ANY OTHER USES, INCLUDING COPYING THE FORM DOCUMENT, ARE STRICTLY PROHIBITED.

14.3.2 If the Owner accepts such an assignment, and the Work has been suspended for more than thirty (30) consecutive Days, following termination, if appropriate, the Subcontractor's compensation shall be equitably adjusted as a result of the suspension.

14.4 TERMINATION BY DESIGN-BUILDER If Subcontractor fails to commence and satisfactorily continue correction of a default within three (3) business Days after written notification issued under Paragraph 14.1, then Design-Builder may, in lieu of or in addition to Paragraph 14.1, issue a second written notification, to Subcontractor and its surety, if any. Such notice shall state that if Subcontractor fails to commence and continue correction of a default within seven (7) Days of the written notification, the Agreement will be deemed terminated. A written notice of termination shall be issued by Design-Builder to Subcontractor at the time Subcontractor is terminated. Design-Builder may furnish those materials, equipment and/or employ such workers or subcontractors as Design-Builder deems necessary to maintain the orderly progress of Design-Builder's work. All costs incurred by Design-Builder in performing Subcontract Work, including reasonable overhead, profit and attorneys' fees, costs and expenses, shall be deducted from any monies due or to become due Subcontractor. Subcontractor shall be liable for payment of any amount by which such expense may exceed the unpaid balance of the Subcontract Amount. At Subcontractor's request, Design-Builder shall provide a detailed accounting of the costs to finish Subcontract Work.

14.5 TERMINATION BY SUBCONTRACTOR If Subcontract Work has been stopped for thirty (30) Days because Subcontractor has not received progress payments or has been abandoned or suspended for an unreasonable period of time not due to the fault or neglect of Subcontractor, then Subcontractor may terminate this Agreement upon giving Design-Builder seven (7) Days' written notice. Upon such termination, Subcontractor shall be entitled to recover from Design-Builder payment for all Subcontract Work satisfactorily performed but not yet paid for, including reasonable overhead, profit and attorneys' fees, costs and expenses. However, if Owner has not paid Design-Builder for the satisfactory performance of Subcontract Work through no fault or neglect of Design-Builder, and Subcontractor terminates this Agreement under this Article because it has not received corresponding progress payments, Subcontractor shall be entitled to recover from Design-Builder, within a reasonable period of time following termination, payment for all Subcontract Work satisfactorily performed but not yet paid for, including reasonable overhead and profit. Design-Builder's liability for any other damages claimed by Subcontractor under such circumstances shall be extinguished by Design-Builder pursuing said damages and claims against Owner, on Subcontractor's behalf, in the manner provided for in Paragraph 14.2 of this Agreement.

15. CLAIMS AND DISPUTES

15.1 CLAIMS RELATING TO DESIGN-BUILDER Subcontractor shall give Design-Builder written notice of all claims within seven (7) Days of Subcontractor's knowledge of facts giving rise to the event for which claim is made; otherwise, such claims shall be deemed waived. All unresolved claims, disputes and other matters in question between Design-Builder and Subcontractor shall be resolved in the manner provided in this Agreement.

15.2 DAMAGES If the prime agreement provides for liquidated or other damages for delay beyond the completion date set forth in this Agreement, and such damages are assessed, Design-Builder may assess a share of the damages against Subcontractor in proportion to Subcontractor's share of responsibility for the delay. However, the amount of such assessment shall not exceed the amount assessed against Design-Builder. Nothing in this Agreement shall be construed to limit Subcontractor's liability to Design-Builder for Design-Builder's actual delay damages caused by Subcontractor's delay.

IMPORTANT: A vertical line in the margin indicates a change has been made to the original text. Prior to signing, recipients may wish to request from the party producing the document a "redlined" version indicating changes to the original text. Consultation with legal and insurance counsel and careful review of the entire document are strongly encouraged.
ConsensusDOCS 751 • STANDARD SHORT FORM AGREEMENT BETWEEN CONTRACTOR AND SUBCONTRACTOR (Where Contractor Assumes Risk of Owner Payment) Copyright © 2007, ConsensusDOCS LLC; revised May 2009. YOU ARE ALLOWED TO USE THIS DOCUMENT FOR ONE CONTRACT ONLY. YOU MAY MAKE 9 COPIES OF THE COMPLETED DOCUMENT FOR DISTRIBUTION TO THE CONTRACT'S PARTIES. ANY OTHER USES, INCLUDING COPYING THE FORM DOCUMENT, ARE STRICTLY PROHIBITED.

15.2.1 DESIGN-BUILDER CAUSED DELAY Nothing in this Agreement shall preclude Subcontractor's recovery of delay damages caused by Design-Builder.

15.3 WORK CONTINUATION AND PAYMENT Unless otherwise agreed in writing, Subcontractor shall continue Subcontract Work and maintain the Progress Schedule during any dispute resolution proceedings. If Subcontractor continues to perform, Design-Builder shall continue to make payments in accordance with this Agreement.

15.4 MULTIPARTY PROCEEDING The Parties agree, to the extent permitted by the prime agreement, that all Parties necessary to resolve a claim shall be Parties to the same dispute resolution proceeding. To the extent disputes between Design-Builder and Subcontractor involve in whole or in part disputes between Design-Builder and Owner, disputes between Subcontractor and Design-Builder shall be decided by the same tribunal and in the same forum as disputes between Design-Builder and Owner.

15.5 NO LIMITATION OF RIGHTS OR REMEDIES Nothing in Article 15 shall limit any rights or remedies not expressly waived by Subcontractor which Subcontractor may have under lien laws or payment bonds.

15.6 DIRECT DISCUSSION If a dispute arises out of or relates to this Agreement, the Parties shall endeavor to settle the dispute through direct discussion.

15.7 MEDIATION Disputes between Subcontractor and Design-Builder not resolved by direct discussion shall be submitted to mediation pursuant to the Construction Industry Mediation Rules of the American Arbitration Association. The Parties shall select the mediator within fifteen (15) Days of the request for mediation. Engaging in mediation is a condition precedent to any form of binding dispute resolution.

15.8 BINDING DISPUTE PROCESSES If the matter is unresolved after submission of the matter to mediation, the Parties shall submit the matter to the binding dispute resolution procedure designated herein (Designate only one):

__ Arbitration using the current Construction Industry Arbitration Rules of the American Arbitration Association or the Parties may mutually agree to select another set of arbitration rules. The administration of the arbitration shall be as mutually agreed by the Parties.

( ) Litigation in either the state or federal court having jurisdiction of the matter in the location of the Project.

15.9 COST OF DISPUTE RESOLUTION The costs of any binding dispute resolution procedure shall be borne by the non-prevailing Party, as determined by the adjudicator of the dispute.

15.10 VENUE The venue of any binding dispute resolution procedure shall be the location of the Project, unless the Parties agree on a mutually convenient location.

16. JOINT DRAFTING The Parties expressly agree that this Agreement was jointly drafted, and that they both had opportunity to negotiate terms and to obtain assistance of counsel in reviewing terms prior to execution. This Agreement shall be construed neither against nor in favor of either Party, but shall be construed in a neutral manner.

DESIGN-BUILDER: Gundlach Champion, Inc.

BY: .....

IMPORTANT: A vertical line in the margin indicates a change has been made to the original text. Prior to signing, recipients may wish to request from the party producing the document a "redlined" version indicating changes to the original text. Consultation with legal and insurance counsel and careful review of the entire document are strongly encouraged.
ConsensusDOCS 751 • STANDARD SHORT FORM AGREEMENT BETWEEN CONTRACTOR AND SUBCONTRACTOR (Where Contractor Assumes Risk of Owner Payment) Copyright © 2007, ConsensusDOCS LLC; revised May 2009. YOU ARE ALLOWED TO USE THIS DOCUMENT FOR ONE CONTRACT ONLY. YOU MAY MAKE 9 COPIES OF THE COMPLETED DOCUMENT FOR DISTRIBUTION TO THE CONTRACT'S PARTIES. ANY OTHER USES, INCLUDING COPYING THE FORM DOCUMENT, ARE STRICTLY PROHIBITED.

PRINT NAME: _____

PRINT TITLE: _____

SUBCONTRACTOR: _____

BY: .....

PRINT NAME: _____

PRINT TITLE: _____

IMPORTANT: A vertical line in the margin indicates a change has been made to the original text. Prior to signing, recipients may wish to request from the party producing the document a "redlined" version indicating changes to the original text. Consultation with legal and insurance counsel and careful review of the entire document are strongly encouraged.

ConsensusDOCS 751 • STANDARD SHORT FORM AGREEMENT BETWEEN CONTRACTOR AND SUBCONTRACTOR (Where Contractor Assumes Risk of Owner Payment) Copyright © 2007, ConsensusDOCS LLC; revised May 2009. YOU ARE ALLOWED TO USE THIS DOCUMENT FOR ONE CONTRACT ONLY. YOU MAY MAKE 9 COPIES OF THE COMPLETED DOCUMENT FOR DISTRIBUTION TO THE CONTRACT'S PARTIES. ANY OTHER USES, INCLUDING COPYING THE FORM DOCUMENT, ARE STRICTLY PROHIBITED.

EXHIBIT E

TRADE CONTRACTOR INSURANCE REQUIREMENTS

Trade Contractor shall obtain and maintain insurance with coverage limits as set forth in this exhibit. Trade Contractor shall not commence work under the Trade Contract Agreement until it has obtained all insurance required hereunder, and submitted evidence of such to insureds.

1. Each Trade Contractor and its Subcontractor(s) regardless of tier, shall maintain required insurance for not less than three (3) years after substantial completion of the work.
2. Each policy shall provide that it will not be canceled or materially altered except after a thirty (30) day written notice to insureds.
3. Each Trade Contractor and its Subcontractor(s) regardless of tier, shall with respect to the work, maintain and pay for insurance coverage with companies that have at least an "A-" rating according to the Best Guide.

The limits for liability insurance shall provide coverages for not less than the following amounts or as required by law, or as required in Construction Manager's binding agreement for the Project, whichever is greater:

TYPE	LIMITS	
General Liability	$2,000,000	General Aggregate (must apply per project)
Including Blanket	$1,000,000	Products Aggregate
Contractual Liability,	$1,000,000	Personal Injury
Explosion, Collapse,	$1,000,000	Each Occurrence
and Underground	$ 50,000	Fire Damage
Coverage	$5,000	Medical Expense (per person)

There shall be no adjustment or modification of the policy limiting the scope of coverage for liability arising from sudden pollution, explosion, collapse, or underground property damage. Contractual liability shall provide coverage for the indemnification provisions within the Trade Contract Agreement.

TYPE	LIMITS	
Protection & Indemnity or Other Water Craft Liability	$1,000,000	If Applicable
Automobile Liability Including Coverage on Owned and Non-Owned Vehicles	$1,000,000	Combined Single Limit

If Trade Contractor is required to move and/or haul hazardous waste from the project site, or if the project involves such similar environmental exposure, pollution liability coverage equivalent to that provided under ISO Pollution Liability-Broadened Coverage for Covered Autos Endorsement (CA 99 48) shall be provided, and the Motor Carrier Act Endorsement MCS 90 shall be attached.

TYPE	LIMITS	
Excess Liability-Umbrella	$1,000,000	Each Occurrence
Follow Form Over Underlying GL, AL, EL	$1,000,000	Aggregate
Installation Floater/Cargo Liability/Rigging/Liability	As Applicable Coverage in an amount equal or greater than the value of the property being installed, hauled or lifted.	

TYPE	LIMITS
Workers Compensation-Statutory Limits	
Employers Liability:	
Each Accident	$100,000
Policy Limit	$500,000
Each Employee	$100,000

Stop Gap Liability in Monopolistic States. As Applicable

1. Benefits: Statutory, to the state the work is being performed.
2. Federal (e.g., Longshoremen's and Harbor Workers Act, Jones Act, Maritime or Admiralty Act. As Applicable
3. All employees on project site must be included for coverage.

Trade Contractor must name Chippewa County, Gundlach Champion, and Landmark Design Group PC as additional insureds on a primary, non-contributory basis to the Trade Contractor's general, auto, and excess liability policies for both ongoing and completed operations. Coverage as an additional insured should be as broad as ISO 7/04 forms CG2010 and CG2037 combined.

All policies shall be endorsed and certificate shall state that the policies provide a waiver of subrogation in favor of additional insureds.

The limits of liability as stated may be arrived at using a Split-Limit or a Combined Single Limit basis. However, the total limit of liability shall not be less than that stated in the requirements.

The above limits are minimum acceptable insurance limits and do not represent that coverage and limits will necessarily be adequate to protect the Trade Contractor and should not be construed in any way to limit the Trade Contractor's liability to additional insureds nor the indemnification provisions of the Trade Contract Documents.

The Trade Contractor shall maintain full and complete insurance on their Work until final acceptance by additional insureds. The Trade Contractor assumes all risk of loss for their Work.

Additional insureds are not responsible to provide any protective service for the Trade Contractor's benefit. If Builders Risk Insurance is purchased by additional insureds, Trade Contractor may request a copy of the policy or a certificate of insurance to determine the coverage provided.

Any Deductible amount applied to any loss payable under the Builders Risk Insurance shall be borne by the party's interest whose work is damaged in direct proportion as their individual losses shall bear to the total loss. Additional insureds neither represent nor assume responsibility for the adequacy of the Builders Risk Insurance to protect the interests of the Trade Contractor. Trade Contractor assumes the obligation to purchase and maintain any additional property insurance that it deems necessary to protect its interests in the Work.

Additional insureds shall have the right, but not the obligation, to prohibit Trade Contractor or its Subcontractor(s) regardless of tier, from entering the project site until such certificates or other evidence that insurance has been placed in complete compliance with these requirements is received by additional insureds.

Acceptance of any certificate(s) and/or endorsement(s) of insurance by additional insureds does not waive the insurance requirements provided in the foregoing paragraphs. Should additional insureds sustain any loss or be required to pay any claim as a result of the Trade Contractor's failure to obtain or maintain insurance as is required by this Trade Contract Agreement, the Trade Contractor shall indemnify additional insureds for any such loss. This indemnification shall occur regardless of whether or not additional insureds have accepted any certificate(s) and/or endorsement(s) of insurance provided by the Trade Contractor or its carrier.

*** SAMPLE ***
(FOR REFERENCE ONLY)

SUB-CONTRACTOR SERVICES AGREEMENT

THIS AGREEMENT, made this **Date** by and between **Contractor** hereinafter referred to as SUB-CONTRACTOR, of Contractor Address and TriMedia Environmental & Engineering Services, LLC hereinafter referred to as "TriMedia", of 1002 Harbor Hills Drive, Marquette, Michigan 49855.

WITNESSETH:

PROJECT
TriMedia hereby contracts with SUB-CONTRACTOR to provide the following services, hereinafter collectively referred to as the PROJECT (TriMedia Project Number 2011-XXX):

Project Title

COMPENSATION
SUB-CONTRACTOR shall be paid for all services rendered on the following basis: ***A lump sum of $ _____ shall be paid by TriMedia to SUB-CONTRACTOR as provided in Paragraph 3 of the Terms and Conditions attached***.

SUB-CONTRACTOR's Employer I.D. # or Social Security Number: _____

Check categories that are applicable to SUB-CONTRACTOR's business as defined by Federal Procurement Regulations:

[ ]	Corporation	[ ]	Partnership	[ ]	Proprietorship	[ ]	Non Profit Entity
[ ]	Small Business	[ ]	Woman Owned	[ ]	Minority Owned	[ ]	Hub Zone

No. of Employees: _____

SCHEDULE
Time is of the essence for this Work. Therefore, it is agreed that the SUB-CONTRACTOR shall substantially complete all services under this agreement by Completion Date, as detailed in the Project Specifications.

SUB-CONTRACTOR'S AGENT
The SUB-CONTRACTOR has appointed _____as the official AGENT of the SUB-CONTRACTOR for the purpose of the PROJECT and said AGENT has the express authority to bind SUB-CONTRACTOR to all Terms and Conditions of this Agreement, and any subsequent Change Orders. As such, the AGENT shall be responsible for the execution of any document pertaining to this Agreement and for approving all Change Orders to this Agreement.

ITEMS TO BE SUBMITTED
The following items must be submitted by the SUB-CONTRACTOR prior to commencement of on site work:

☒ Insurance - Certificate of Insurance naming as additional insured TriMedia Environmental & Engineering Services, LLC and Client

☐ Payment Bond and Performance Bond – naming TriMedia Environmental & Engineering Services, LLC and Client as obliges.

☒ Health and Safety Plan

TERMS AND CONDITIONS
The Terms and Conditions of this Agreement shall apply to all services performed by SUB-CONTRACTOR pursuant to this Agreement unless otherwise specifically agreed in writing.

ADDITIONAL PROVISIONS; ENTIRE AGREEMENT
The SUB-CONTRACTOR and TriMedia mutually agree that the rights and obligations of the parties under this Agreement shall be further governed by the Additional Provisions indicated below, and that such Additional Provisions, together with the Terms and Conditions of this Agreement are intended by the SUB-CONTRACTOR and TriMedia as a final expression and complete and exclusive statement of their agreement to complete the PROJECT.

☐ Regulatory Agency Guidance Documents and/or Directives

☒ Other Documents as Noted

Company bid dated Bid Date.

☒ TriMedia Bid Specifications

☐ Other Drawings and/or Specifications

Unit Price Schedule dated _____

☐ Construction Observation/Monitoring

SUB-CONTRACTOR	**TriMedia Environmental & Engineering Services, LLC**
	Thomas Anthos, CIH
Its: _____	**Its:** **Managing Member**
Date: _____	**Date:** _____

TERMS AND CONDITIONS

1. **Parties and Scope of Work:** TriMedia Environmental and Engineering Services, LLC ("TriMedia") shall include said company, or its particular division, subsidiary or affiliate requesting the work. "Work" means the service(s) performed by SUB-CONTRACTOR for TriMedia. "This Agreement" consists of those tasks identified in the *Sub-Contractor Services Agreement*, SUB-CONTRACTOR's written acceptance thereof if accepted by TriMedia, and these Terms and Conditions. "SUB-CONTRACTOR" refers to the person or business entity performing said Work

2. **Independent Contractor:** The relationship between the Sub-Contractor and TriMedia created under this Agreement is that of an independent contractor. Neither the terms of this Agreement nor the performance thereof is intended to directly or indirectly benefit any person or entity not a party hereto and no such person or entity is intended to be or shall be construed as being a third-party beneficiary of this Agreement unless specified by name herein or in an Amendment hereto, executed by the Managing Member of TriMedia.

3. **Expenses and Payments:** SUB-CONTRACTOR shall not demand reimbursement for any costs or expenses except as specified in this Agreement or subsequent Change Order to this Agreement. SUB-CONTRACTOR shall submit to TriMedia either a single invoice at the completion of the Work or monthly progress invoices during the term of this Agreement.

   All invoices for payment must be accompanied by a waiver of lien from the SUB-CONTRACTOR on behalf of its Sub-Contractors, suppliers and material men. In the case of monthly invoices, all invoices shall be accompanied by lien waivers as set forth above, and a summary of funds paid to date by TriMedia to SUB-CONTRACTOR for subject Project.

   Monthly progress invoices shall be submitted no later than the 26th day of the then-current calendar month. All invoices shall be delivered to TriMedia at the following address:

   Accounts Payable
   TriMedia Environmental & Engineering Services, LLC
   1002 Harbor Hills Drive
   Marquette, Michigan 49855

   All invoices shall reference the project name, location, TriMedia Project Number, and TriMedia Project Manager and be accompanied by a waiver of lien. Within ten working days after TriMedia receives payment from Client for the services rendered by SUB-CONTRACTOR, TriMedia shall pay same to SUB-CONTRACTOR. TriMedia reserves the right to withhold 10% retainage from all progress payments. Upon completion and acceptance of services provided by SUB-CONTRACTOR, and within ten working days after TriMedia receives final payment from Client for services rendered by SUB-CONTRACTOR, TriMedia shall pay retainage to SUB-CONTRACTOR.

   The acceptance by SUB-CONTRACTOR of the final payment under this Agreement shall operate as a release to the Client and TriMedia for all claims and liability to the SUB-CONTRACTOR, its representatives, lower tier subs, suppliers, and assigned for any additional compensation or payment relating to any and all tasks done or furnished relating to the services rendered by SUB-CONTRACTOR in performance of the Work.

4. **Warranty:** SUB-CONTRACTOR warrants to TriMedia that: (a) it possesses the expertise, capability, equipment, training and personnel to properly perform the Work required pursuant to this Agreement; (b) it is properly and legally licensed (if applicable) to perform the Work; and, (c) that it shall at all times in the performance of such Work comply with all applicable laws, ordinances, rules and regulations and shall perform all services in a good, workmanlike, efficient and non-negligent manner, with that standard of care, skill, and diligence normally provided by a professional person or firm in the performance of similar Work, at the same time, under similar conditions, at the same or similar locality.

5. **Safety:** SUB-CONTRACTOR shall comply with all applicable federal, state, and local laws, ordinances, rules, and regulations (including the *Occupational Safety and Health Act* of 1970 and the regulations issued there under). TriMedia shall not be liable to determine the methods and/or procedures utilized by the SUB-CONTRACTOR or its subcontractors for conformance with state and federal safety laws, regulations, guidance documents, and/or policies related in any manner whatsoever to the Work. In instances where TriMedia issues a *Health and Safety Plan* (HASP) for the project, the HASP exclusively governs services to be performed by TriMedia. The HASP may be used by others to provide consistency with certain construction, demolition, abatement of building contaminants, operation and maintenance, and/or any other services required by the Project by organizations other than TriMedia, but such reliance is at the sole discretion of the user of the HASP. TriMedia shall not be liable for any safety violations, injuries, up to and including death, for reliance on the HASP.

Occupational Safety and Health Administration (OSHA) regulations for employers engaged in work on hazardous sites (29 CFR 1910.120) require each employee to obtain specialized training prior to entry onto a site. The minimum required is typically 40 hours and must be documented by a certificate of completion. SUB-CONTRACTOR's employees engaged in work on hazardous waste sites as defined in 29 CFR 1910.120 shall have appropriate specialized training. SUB-CONTRACTOR is responsible for ensuring that its employees have required training and agrees to furnish proof of training for its employees to TriMedia upon request.

6. **Federal Right-to-know Compliance:** In compliance with the Federal Hazard Communication Standard, SUB-CONTRACTOR shall provide TriMedia a list of hazardous chemicals in the workplace to which employees may be exposed while executing the Work.

7. **Submittals:** If submittals are required as part of this Agreement, TriMedia will check samples; catalog data; schedules; drawings; test results, and other data which the SUB-CONTRACTOR is required to submit, only for conformance with the design concept of the project and compliance with the information given by the Contract Documents.

8. **Restoration:** SUB-CONTRACTOR shall take reasonable measures and precautions to minimize damage to the Work area and any improvements located thereon as the result of its operations and the use of its equipment. If TriMedia or the possessor of any interest in any site desires site restoration from damages caused by SUB-CONTRACTOR, the SUB-CONTRACTOR shall provide such restoration at no additional cost to TriMedia.

9. **Subsurface Structures:** SUB-CONTRACTOR represents and warrants that it assumes the responsibility for the location of all utility lines at the site at which SUB-CONTRACTOR is to do work and unless TriMedia assumed in writing the responsibility of locating subsurface objects, structures, lines or conduits. SUB-CONTRACTOR agrees to defend, indemnify and save TriMedia harmless from all claims, suits, losses, costs and expenses, including actual attorneys fees as a result of personal injury, death or property damage occurring with respect to SUB-CONTRACTOR's performance of its work and resulting from, or caused by, contact with subsurface or latent objects, structures, lines or conduits where the actual or potential presence and locations thereof was not revealed to TriMedia by SUB-CONTRACTOR.

10. **Payment and Performance Bonds:** If required, the SUB-CONTRACTOR shall furnish payment and performance bonds prior to execution of the Work. The bonds must be made payable to TriMedia in the amount of the Contract Total. Each bond must be signed by both the SubContractor and the Surety. The current power of attorney for the person who signs for the Surety must be attached to the bonds. The Surety shall be a corporate Surety licensed to transact business in the state of Michigan and acceptable to TriMedia.

    In the event of any Change Order resulting in the performance of additional work, the amounts of the bonds shall be increased by the amount of the executed Change Order.

11. **Insurance:** SUB-CONTRACTOR SHALL NOT PERFORM ANY PORTION OF THE WORK UNTIL ITS INSURANCE CERTIFICATES HAVE BEEN RECEIVED AND ACCEPTED BY TRIMEDIA. SUB-CONTRACTOR shall provide TriMedia with current insurance certificates evidencing all required coverage stipulated in the Contract Documents. SUB-CONTRACTOR shall have TriMedia and its Client named as an additional insured. The insurance certificate should also list the TriMedia Project Number and location of the work. Such insurance policies shall not be subject to cancellation without the insurer first giving TriMedia 30 days written advance notice. All insurance shall be primary, without right of contribution by any insurance carried by TriMedia or its Client. The SUB-CONTRACTOR shall purchase insurance from companies authorized to do business in the state of Michigan.

    SUB-CONTRACTOR shall purchase and maintain in effect for a period of one year following the termination of this Agreement or completion of the Work, whichever period shall be longer, the following minimum insurance: (a) Commercial General Liability Insurance, with limits of liability of not less than $1,000,000 (Personal Injury) and $500,000 (Property Damage) for each occurrence, to include blanket contractual, completed operations, and broad form property damage and personal injury coverage; (b) Comprehensive Automobile Liability Insurance (Bodily Injury and Property Damage Combined), with limits of liability of not less than $1,000,000 each occurrence, to cover all owned and non-owned vehicles; (c) Workers Compensation Insurance in accordance with all applicable federal, state and/or local laws; (d) Employer's Liability Insurance, with limits of liability not less than $1,000,000; (e) Excess Liability Insurance (umbrella form) with limits of liability of not less than $1,000,000; and, (f) Any and all insurance required by federal, state and/or local statute, ordinance, rule or regulation.

    If subcontract is for engineering design or other professional services: (g) Professional Liability on claims-made basis of not less than $1,000,000.

12. **Indemnification:** SUB-CONTRACTOR shall indemnify, defend and save harmless TriMedia, its affiliates and subsidiaries, their officers, directors and employees and their successors, heirs and representatives from any responsibility or liability in any way for claims; losses; suits; actions; legal or administrative proceedings; demands or other letters from a federal, state, local government, or other person,

identifying TriMedia as a potentially responsible party; damages; fines; punitive damages; costs; liabilities; interest; attorneys' fees and other legal expenses and costs; or other expenses arising out of the death of, actual or threatened injuries or damages to any person, property and natural resources, including aggravation of existing conditions and loss of use arising out of, incident to, or in connection with this Agreement caused by the negligent act, willful misconduct, errors or omissions of the SUB-CONTRACTOR in the performance of services hereunder.

13. **Supervision and Inspection:** SUB-CONTRACTOR shall perform all Services covered by this Agreement as an independent entity, maintaining full and complete control over SUB-CONTRACTOR's employees and Sub-Contractors. TriMedia assumes no duties with respect to any aspect of performance of the Services by SUB-CONTRACTOR, and does not retain any right to control SUB-CONTRACTOR's performance. SUB-CONTRACTOR shall not at any time hold itself out as an employee or agent of TriMedia, and shall not at any time enter into any contract with any person or entity that shall purport to bind TriMedia.

14. **Quality:** Payment of any funds by TriMedia shall not constitute a waiver or acceptance of defective or deficient workmanship or data and shall not relieve SUB-CONTRACTOR from any responsibility under this Agreement. At TriMedia's request, SUB-CONTRACTOR shall promptly correct, at SUB-CONTRACTOR's sole expense, any portion of the Work that fails in TriMedia's reasonable discretion to meet the requirements set forth in the Agreement. If TriMedia determines SUB-CONTRACTOR is unable to perform any portion of the Work in compliance with this Agreement, TriMedia may retain another Sub-Contractor to correct or perform the Work in question and adjust Compensation to the SUB-CONTRACTOR accordingly.

15. **STATEMENT OF CONFIDENTIALITY:** SUB-CONTRACTOR agrees to keep confidential and not disclose to any person or persons, other than TriMedia employees, sub-consultants or subcontractors, any data and information that is marked CONFIDENTIAL by the Client. These provisions however, shall not apply to information in whatever form that comes into public domain, nor shall it restrict SUB-CONTRACTOR from giving notices required by law or complying with an order to provide information or data when such an order is issued by a court, administrative agency, or other authority with proper jurisdiction, or if it is necessary for SUB-CONTRACTOR to defend itself from suit or claim. In addition, SUB-CONTRACTOR is specifically authorized to disclose information if, in SUB-CONTRACTOR's sole professional opinion, the failure to disclose will or may result in an imminent and substantial endangerment to the public health, safety, welfare or the environment.

16. **Records:** SUB-CONTRACTOR shall retain in legible form all records, including logs, field data, laboratory data, test results, analyses, calculations and notes, relating to the Work for a period of seven years and all records relating to expenses and payments for a period of seven years following termination of this Agreement. SUB-CONTRACTOR agrees to provide TriMedia with one full copy of these documents/records at no expense to TriMedia. If the Work is conducted at a National Priority List or other hazardous waste site, the Parties agree that all records, drawings, studies, surveys, maps, plans and specifications, test results, and field notes in the possession of each shall be retained by each and made available to the other, on reasonable written request, for a minimum period of seven years following completion of the Work.

17. **Permits:** SUB-CONTRACTOR shall obtain all permits and licenses and pay all fees and charges thereof necessary for the performance of the Work under this Agreement.

18. **Non-Discrimination in Employment:** SUB-CONTRACTOR agrees and hereby certifies that in providing Services hereunder, it shall adhere fully to all applicable local, state, and federal requirements pertaining to equal employment opportunity.

19. **Social Security and Wage Tax Liability:** SUB-CONTRACTOR accepts full exclusive liability for the payment of all contributions or taxes for unemployment insurance and old age retirement and other benefits, pensions or annuities, and wage or income taxes, now or hereafter imposed by the United States, and any state or political subdivision thereof, however the same be measured with respect to all persons at any time employed by, or on the payroll of the SUB-CONTRACTOR in performing any services directly or indirectly under this Agreement. SUB-CONTRACTOR shall furnish TriMedia such payroll and employment information as may be required to show compliance with the above obligation.

20. **Changes:** TriMedia reserves the right at any time to make changes in the scope of, or specifications for, the Work. Any difference in price or time for performance resulting from such changes shall be equitably adjusted and this Agreement shall be modified in writing accordingly, subject to mutual agreement of both Parties. No changes in quality, quantity, or nature of the Work to be provided hereunder shall be made except by agreement signed by the noted authorized TriMedia representative.

    If the CONTRACTOR wishes to make a claim for an increase in the Contract Sum, he shall deliver written notice within thirty (30) days of the event or change. This notice shall be given by the Contractor before proceeding to execute the Work, except in an emergency endangering life or property. The written notice should include detailed information to allow for consideration of the claim.

The value of the Agreement and required dates of performance may only be changed by a Change Order. The Change Order will constitute full and final settlement of all aspects of cost and time related to the change in Work described. All Change Orders shall be approved and signed by the SUB-CONTRACTOR'S agent and TriMedia.

21. **Force Majeure:** SUB-CONTRACTOR shall not be considered in default because of any delays in the completion of Work due to causes beyond the control and without the fault or negligence of SUB-CONTRACTOR. SUB-CONTRACTOR shall notify TriMedia in writing of the causes of delay and its probable extent within five days of the occurrence giving rise to the claim. Such notification shall not be the basis for a claim for additional compensation.

22. **Assignments and Subcontracts:** SUB-CONTRACTOR's rights and obligations hereunder are deemed to be personal and may not be assigned without the prior written consent of TriMedia and any attempt at assignment without such consent shall be void. SUB-CONTRACTOR shall not subcontract for any part if the Work without the prior written consent of TriMedia. SUB-CONTRACTOR shall cause any of its Sub-Contractors to comply with all provisions of this Agreement relating to SUB-CONTRACTOR.

23. **Termination:** This Agreement shall terminate automatically upon termination of the Agreement between TriMedia and its Sub-Contractor or it may be terminated at any time by SUB-CONTRACTOR or TriMedia upon seven (7) days written notice. In the event of such termination, SUB-CONTRACTOR shall, upon request, transmit promptly to TriMedia all samples, tests, calculations, notes and results relating to the Work and SUB-CONTRACTOR's services hereunder. The SUB-CONTRACTOR will be paid in accordance with the terms of this Agreement for all services properly completed through the date of termination. TriMedia shall not be obligated hereunder nor otherwise liable to pay SUB-CONTRACTOR, its Sub-Contractors, suppliers or material men any other costs, losses, damages or expenses arising out of, or related to, such termination. Upon termination of this Agreement, SUB-CONTRACTOR shall take all steps as are necessary to ensure that any of the services then in progress shall not pose a threat to the safety of people or property.

24. **Notice:** Any notices required or permitted to be sent may be delivered personally, by facsimile, by telegram, or certified mail, return receipt requested, to the signatories of this Agreement at the addresses as the Parties may designate.

25. **Survival of Obligations:** All payment obligations of the Parties and the agreements contained herein shall survive termination of this Agreement.

26. **GOVERNING LAW/ASSIGNS/WRITTEN NOTICE:** This Agreement shall be deemed to have been made in Marquette County, Michigan, and shall be governed by, and construed in accordance with the laws of the State of Michigan. Any action arising as a result of this Agreement shall be subject to mediation and arbitration in the County of Marquette, Michigan. Neither the Sub-Contractor nor TriMedia may delegate, assign, sublet or transfer its duties, responsibilities or interests in this Agreement, including but not limited to, monies that are due or monies that may be due, without the written consent of the other party. Written notice shall be deemed to have been duly served if delivered in person to the individual or a member of the firm or entity or to an officer of the corporation for which it was intended, or if delivered at or sent by registered or certified mail.

27. **MEDIATION:** In an effort to resolve any conflicts that arise during the course of this Agreement, Sub-Contractor and TriMedia agree that all disputes between them arising out of or relating to this Agreement shall be submitted to non-binding mediation. The Sub-Contractor and TriMedia further agree to include a similar mediation provision in all agreements with independent contractors and consultants retained for the project and to require all independent contractors and consultants also to include a similar mediation provision in all agreements with subcontractors, sub-consultants, suppliers or fabricators so retained, thereby providing for mediation as the primary method for dispute resolution between the parties to those agreements. The parties shall work in good faith to identify a mediator agreeable to both parties.

28. **ARBITRATION:** Any dispute arising pursuant to any contract to which these Terms and Conditions apply that cannot be resolved by mediation, shall be submitted to arbitration in the City of Marquette, Michigan, in accordance with the rules of the American Arbitration Association, the award of the arbitrator to be final and binding on the parties. Judgment upon any award rendered may be enforced in any court having jurisdiction. The parties agree to consent to the jurisdiction of the Marquette County Michigan Circuit Court. Each party shall have the right to select an arbitrator who is an attorney licensed in Michigan with experience in environmental law matters as a member of the panel. The two arbitrators selected will jointly select a third neutral arbitrator who shall serve as the Chair of the panel.

29. **CORPORATE PROTECTION:** It is intended by the parties of this Agreement that any involvement by TriMedia in connection with this project shall not subject TriMedia employees, officers, or directors to any personal liability for the risks associated with this project. Therefore, the Sub-Contractor agrees that any claim or demand, (or suit to enforce the mediation and arbitration or other provision of this Agreement) shall only be directed and/or asserted against TriMedia, and not against any TriMedia employee, officer, or director. By accepting the terms of this Agreement, Sub-Contractor hereby releases and forever discharges TriMedia's employees, officers, directors and/or members from any and all such claims.

30. **Complete Agreement:** This Agreement constitutes the complete and integrated agreement between the Parties. It may be changed only by a Change Order in writing signed by the Parties hereto.

31. **Reference:** Headings and italics in this Agreement are included herein for convenience of reference and shall not constitute a part of the Agreement for any other purpose.

☑ **ENVIRONMENTAL TERMS AND CONDITIONS**

32. **Hazardous Materials:** Nothing contained within this Agreement shall be construed or interpreted as requiring TriMedia to assume the status of generator, storer, transporter, treater or disposal facility as those terms appear within the Federal *Resource Conservation and Recovery Act* (RCRA), or within any federal or state statute or regulation governing the generation, transportation, treatment, storage and disposal of pollutants. SUB-CONTRACTOR assumes full responsibility for compliance with the provisions of RCRA and any other federal or state statute or regulations governing the handling, treatment, storage and disposal of pollutants, hazardous materials, hazardous wastes, or other regulated materials.

33. **Pollution Liability Insurance:** SUB-CONTRACTOR shall purchase and maintain in effect for a period of one year following the termination of this Agreement or completion of the Work, whichever period shall be longer, pollution liability insurance in the minimum amount as indicated in the Additional Provisions of this Agreement.

ACKNOWLEDGED, ACCEPTED AND AGREED:

(Sub-Contractor)	TriMedia Environmental and Engineering Services, LLC
BY:	BY:
ITS:	ITS:
DATE:	DATE:

Doc No.: 41915

F. REFERENCE DOCUMENTS

CHIPPEWA COUNTY CITY/COUNTY BUILDING
325 COURT STREET
SAULT SAINT MARIE, MICHIGAN 49783

TABLE 1: ASBESTOS-CONTAINING MATERIALS
TRIMEDIA PROJECT #2011-044

Material & Asbestos Content	Sample Number	Description	Location
Fire Door 20% Chrysotile	A-001	Assorted Doors w/Gray Asbestos Cores	Throughout the City/County Building

TABLE 2: MATERIALS FOUND NOT TO CONTAIN ASBESTOS
TRIMEDIA PROJECT #2011-044

Material	Sample Number	Description	Location	No. of Samples
HVAC Duct Mastic	A-002	Brown/Black	Building Duct Work	1

TABLE 3: LEAD RESULTS
TRIMEDIA PROJECT #2011-044

Sample Number	Location	Paint Color	Lead Concentration (Parts Per Million)
L-001	First Floor Cells	Gray	**Less Than 380**
L-002	Basement White Masonry Wall	White	**Less Than 110**
L-003	First Floor Office Millwork	Blue	**620**

TriMedia
Environmental & Engineering

G. DIVISION 1 – GENERAL REQUIREMENTS

G. DIVISION 1 – GENERAL REQUIREMENTS

This Division applies to the Work described in each division of the Project Specifications.

GENERAL REQUIREMENTS SECTIONS INCLUDE:

01010 – Summary of Work

01015 – Use of Premises

01040 – Coordination

01060 – Permits & Fees

01090 – References

01100 – Hazardous Materials

01200 – Project Meetings

01300 – Submittals

01400 – Quality Control

01500 – Construction Facilities and Temporary Controls

01600 – Materials and Equipment

01650 – Starting of Systems

01700 – Contract Closeout

SECTION 01010
SUMMARY OF WORK

PART 1 GENERAL

1. PROJECT DESCRIPTION

   A. Project Location: 325 Court Street, Sault Ste. Marie, MI 49783

   B. Project Description: The overall Project consists of the renovation of three (3) floors of the City County Building. Work will be phased in order to accommodate staff remaining in the building. The demolition will consist of removal and disposal of concrete walls, concrete floors, CMU walls, miscellaneous steel, doors, frames, hardware, flooring, mechanical, plumbing and electrical. Structural steel will support a new floor over the boiler room and a connecting walkway to the 1999 Jail addition. New construction will be metal stud and drywall with painted finish on the interiors and exterior walls will be CMU with EIFS finish. New aluminum entrances will be installed from Court Street. There will be new flooring throughout the area of renovation including ceramic tile, VCT and carpet. New acoustical ceilings will be installed on the 1st and 2nd floor offices and public areas. Cooling will be provided throughout the building and upgrades to the heating system to provide air exchange. The electrical will be upgraded as well and security measures put in place for employee and visitor safety.

   C. The Design-Builder's work is the construction and services required of the Design-Builder to fulfill its obligations pursuant to its agreement with the Owner (the Work). The Subcontract Work is a portion of the Work.

2. BUILDING TYPE AND USE

   A. The project will be per the Michigan 2009 Building Code.

3. WORK BY OWNER

   A. Work by Owner is work that the Owner will perform with its own forces or will contract for separately. The design, drawings, specifications, and work will be by others per separate contract. Summarized below are clarifications of scopes of work that will be by Owner.

      1. Loose furnishings and appliances not indicated in plans <u>and</u> specifications will be by the Owner.

      2. Equipment not indicated in plans <u>and</u> specifications will be by the Owner.

   B. While the work is excluded from this Contract, work of this Contract shall be coordinated with that of others.

END OF SECTION

SECTION 01015
USE OF PREMISES

PART 1 GENERAL

1. USE OF EXISTING FACILITIES

   A. Construction personnel are to limit their usage of the occupied areas of the facility to that which is absolutely necessary for the installation of their work. Parts of the grounds not in the construction area are "off limits" unless a specific work task is being performed as designated by the Design-Builder.

2. USE OF PREMISES AND DELIVERIES

   A. Subcontractor shall be subject to the rules and regulations for the conduct of the work as the Owner or Design-Builder may establish.

   B. Close coordination will be required of each Subcontractor with the Owner, Design-Builder, other Subcontractors, the county, the city and others having an interest in the project to assure that work on the site, access to and from the site and the general conduct of operations is maintained in a safe and efficient manner, and that disruption and inconvenience to existing streets and property is minimized. Each Subcontractor is responsible to review the site and be familiar with all existing conditions within and around the Owner's property including local conditions and requirements.

   C. Street parking will be limited to that authorized by the Owner and Design-Builder. Subcontractors will be allowed one parking spot near the site. Subcontractor is responsible to provide transportation to and from the site for their employees.

   D. It shall be the responsibility of the Subcontractor to keep all streets and drives in the area free of mud, clay, gravel, debris, and any other materials which the Subcontractor's vehicles or equipment may track or scatter onto the street or drives. The frequency of cleaning of these surfaces shall be based on the amount of material deposited and shall not necessarily be done on a set schedule. The Subcontractor shall clean such streets and/or drives as required, or he shall clean them when instructed to do so by the Design-Builder. Cleaning shall always be continued to the end of the dirtied areas.

   E. Whether shown on the drawings or not, the Subcontractor is responsible to inform itself of the location of underground utilities. Prior to beginning any excavation the Subcontractor shall contact Miss Dig (811 or 800-482-7171) or appropriate agency for the location of all existing underground utilities and/or services. Utilities and/or other services shown or not shown but encountered, shall be protected by the Subcontractor from any damage caused by a result of work and operations, unless or until they are abandoned. If such utilities are damaged by the Subcontractor, he shall make settlement with the Owner(s) of the service(s).

   F. Where it is necessary to build under or near an existing roadway or structures, the Subcontractor shall contact and arrange with the proper officers of the roadway(s), which the work may cross or interfere with, as to the method of protecting said roadway(s) during the work. All work shall be done as ordered by the roadway officials. The Subcontractor shall bear all necessary expense of protecting the roads or structures against possible loss or injury. He shall restore all structures removed by reason of the work to as good as that existing prior to being disturbed.

G. Each subcontractor shall be responsible for all damage to the project including the existing buildings and grounds due to their operation under this contract. Repair or replacement of damaged items shall be to the satisfaction of the Owner.

H. Each Subcontractor shall at all times maintain a clean and safe passageway for the Owner's operations and personnel in existing areas and maintain clearances adjacent to and in connection with the work performed.

I. The Owner shall have the option to curtail or delay any activity that affects their operations. All Subcontractors are to cooperate with the Owner and Design-Builder in all construction operations to minimize conflict, and to facilitate Owner usage.

END OF SECTION

SECTION 01040
COORDINATION

PART 1 GENERAL

1. PROJECT COORDINATION

   A. Each Subcontractor shall cooperate with the Design-Builder and all others whose work may interface with the Subcontract Work; specifically note and immediately advise the Design-Builder of any impediment to the Subcontract Work due to such interface with the Subcontract Work; participate in the preparation of coordination drawings and work schedules in areas of congestion.

   B. Each Subcontractor shall verify that utility requirements of operating equipment are compatible with building utilities.

   C. Each Subcontractor shall verify and coordinate placement of bearing support items.

   D. After Owner occupancy of premises, each Subcontractor shall coordinate access to site for correction of defective Work and Work not in accordance with Subcontract Documents, to minimize disruption of Owner's activities.

2. EXAMINATION

   A. Prior to performing any portion of the Subcontract Work, each Subcontractor shall conduct a visual inspection of the Project site to become generally familiar with local conditions and to correlate site observations with the Subcontract Documents. Discovery of any discrepancies between the site observations and the Subcontract Documents shall be reported to the Design-Builder.

   B. Each Subcontractor shall verify that field conditions, surfaces, and prepared openings are acceptable and are ready to receive work.

   C. Each Subcontractor shall verify that surfaces are smooth and flat within maximum variation recommended for installation of products and that surfaces are ready to receive Work.

   D. Each Subcontractor shall verify that substrate, and adjacent materials are dry as required for products or adhesives.

   E. Each Subcontractor shall verify item(s) provided by other Sections of work are properly sized and located. Verify foundations, pads, pits, and position of anchor bolts and other anchoring devices are in the proper location and of proper size.

   F. Each Subcontractor shall field measure to verify that dimensions are as shown on Drawings, and shop drawings and as instructed by product manufacturer.

   G. Each Subcontractor shall verify mechanical, electrical, phone, plumbing and other building items affecting work are placed and ready to receive this work and that all substrate penetrations are complete.

   H. The Subcontractor shall confirm electrical power is available and is of correct characteristics as required for installed equipment.

   I. Each Subcontractor shall report deficiencies in writing.

J. Beginning of installation means Subcontractor acceptance of existing conditions.

3. CUTTING AND PATCHING

A. Each Subcontractor is responsible for the cutting of all holes and openings through existing walls, partitions, ceilings, floors and roofs as necessary for the installation of their work as specified in the Contract Documents. Holes and openings shall be neatly cut and of minimum size to allow the work to be installed and sealed to provide proper fire rating.

B. Each Subcontractor is responsible for patching and sealing to provide proper fire rating of holes and openings they make. Patching is to match adjacent surfaces in materials and finish. Each Subcontractor is to utilize only tradesmen skilled in the specific finish and material involved in making the patches. All patching is to be done in a neat and workmanlike manner to the satisfaction of the Design-Builder. Defective work shall be corrected at no cost to the Owner and Design-Builder.

C. Where new work connects with existing, the Subcontractor shall do all necessary cutting and fitting required to make a satisfactory connection with the work to be performed so as to leave the entire work in a finished and workmanlike condition. Furnish all labor and materials to this end, whether or not shown or specified. All measurements must be verified at the building.

D. Each Subcontractor will be responsible to pay the appropriate contractor as designated by the Design-Builder for restoring any portion of the building that is disturbed, including but not limited to, slabs, walls, ceilings, fire rated partitions, spray on fireproofing, finishes, etc. to their original state as a result of that Subcontractor's action.

4. FIELD ENGINEERING & LAYOUT

A. The Design-Builder shall establish the principal axis lines of the building and site, and benchmarks. Each Subcontractor shall layout and be responsible for the accuracy of the Subcontract Work and for any loss to the Design-Builder or others by reason of the Subcontractor's failure to layout or perform Subcontract Work correctly. Each Subcontractor shall exercise great care so that the actual final conditions and details shall result in alignment of finish surfaces.

B. Each Subcontractor before commencing work shall examine spaces, surfaces and areas and verify grades, lines, levels, locations and dimensions are as indicated on the drawings to receive his work. Commencing work implies acceptance of existing conditions.

C. Information pertaining to preliminary investigations such as the survey, location of utilities, existing structures, and existing grades appear on the Drawings. While such data has been collected with reasonable care, there is no expressed or implied guarantee that conditions so indicated are entirely representative of those actually existing or that unforeseen developments may not occur. Each Subcontractor must put his own interpretation on results of such investigation and shall satisfy himself as to materials upon which his work may be placed. Where underground services, utilities, structures, etc., are located on the Drawings or given at the site, they are based on the available records but are not guaranteed to be complete or correct. They are merely given to assist each Subcontractor.

5. SUBCONTRACTOR'S DAILY REPORT

A. Each Subcontractor will prepare and distribute daily to the Design-Builder a comprehensive daily report and maintain it during the entire project period. The daily report shall be submitted to the Design-Builder's superintendent by 9:00 A.M. the following workday, for the previous day's work, or as determined at the preconstruction meeting. Take action to specifically alert the Design-Builder to items that could result in claims. The daily report shall include the following as a minimum.

1. Manpower by trade.
2. Weather.
3. List of visitors.
4. Detailed description of work being performed with specific location, floor, etc.
5. Situations or circumstances that could delay work or give causes for claims for extension or added costs.
6. Instruction of information requested.
7. Accidents.
8. Materials received with attached material receipts.
9. Major equipment arrival/departure.
10. Daily Abatement Report (Bid Package 02000 only).
11. OSHA Daily Monitoring Logs (Bid Package 02000 only).
12. Waste Disposal Manifests (Bid Package 02000 only).

END OF SECTION

SECTION 01060
PERMITS AND FEES

PART 1 GENERAL

1. PERMITS AND FEES

   A. Each Subcontractor shall give timely notices to authorities pertaining to the Subcontract Work, and shall be responsible for all permits, fees, assessments and licenses necessary to complete the Subcontract Work in accordance with the Subcontract Documents.

   B. The Design-Builder will obtain and pay for the general building permit only.

   C. Each Subcontractor shall deliver copies of required certificates of inspection and approvals to the Design-Builder.

END OF SECTION

SECTION 01090
REFERENCES

PART 1 GENERAL

1. STANDARDS

   A. Each Subcontractor shall conform to standard referenced Subcontract Documents.

   B. The Subcontractor shall obtain copies of standards when required by Subcontract Documents and maintain copies on site as required by individual Sections.

   C. Should specified reference standards conflict with Subcontract Documents, the Subcontractor shall request clarification from Design-Builder before proceeding.

   D. The contractual relationship of the parties to the Subcontract shall not be altered from the Subcontract Documents by mention of inference otherwise in any reference document.

END OF SECTION

SECTION 01100
HAZARDOUS MATERIALS

PART 1 GENERAL

1. HAZARDOUS MATERIALS

A. A Hazardous Material is any substance or material identified now or in the future as hazardous under any federal, state or local law or regulation, or any other substance or material which may be considered hazardous or otherwise subject to statutory or regulatory requirements governing handling, disposal and /or clean-up.

B. If reasonable precautions will be inadequate to prevent foreseeable bodily injury or death to persons resulting from a material or substance encountered but not created by the Subcontractor, the Subcontractor shall, upon recognizing the condition, immediately stop work in the affected area and report the condition in writing to the Design-Builder who will be responsible to contact the Owner, Architect/Engineer and if required, the government agency with jurisdiction.

C. The Owner shall be responsible for retaining an independent testing laboratory to determine the nature of material encountered and whether it is a Hazardous Material requiring corrective measures and/or remedial action. Such measures shall be the sole responsibility of the Owner, and shall be performed in a manner minimizing any adverse effects upon the work of the Design-Builder and its Subcontractors.

D. The Subcontractor shall not be obligated to commence or continue work until all Hazardous Material discovered at the Project site has been removed, rendered or determined to be harmless by the Owner as certified by an independent testing laboratory approved by the appropriate government agency.

E. The Subcontractor shall resume work in the area affected by any Hazardous Material only upon written agreement between the parties after the Hazardous Material has been removed or rendered harmless and only after approval, if necessary, of the governmental agency or agencies with jurisdiction.

F. If the Subcontractor incurs additional costs and/or is delayed due to the presence or remediation of Hazardous Material, the Subcontractor shall be entitled to an equitable adjustment in the contract price and/or contract time.

G. To the extent not caused by the negligent acts or omissions of the Design-Builder, its Subcontractors and Sub-subcontractors, and the agents, officers, directors and employees of each of them, the Owner shall defend, indemnify and hold harmless the Design-Builder, its Subcontractors and Sub-subcontractors, and the agents, officers, directors and employees of each of them from and against any and all direct claims, damages losses, costs and expenses, including but not limited to attorney's fees, costs and expenses incurred in connection with any dispute resolution process, arising out of or relating to the performance of the Design-Builder's work in any area affected by Hazardous Material. To the fullest extent permitted by law, such indemnification shall apply regardless of the fault, negligence, breach or warranty or contract, or strict liability of the Owner.

H. To the extent that the Design-Builder has rights or obligations under the Owner and Design-Builder agreement or by law regarding hazardous materials as defined by the

Subcontract Document within the scope of Subcontract Work, the Subcontractor shall the same rights or obligations.

I. MATERIAL SAFEY DATA (MSD) SHEETS
Each Subcontractor shall submit to the Design-Builder all Material Safety Data Sheets required by law for materials or substances necessary for the performance of the Subcontract Work. MSD sheets obtained by the Design-Builder from other subcontractors or sources shall be made available to the subcontractor by the Design-Builder.

2. HEALTH AND SAFETY REQUIREMENTS

A. The Subcontractor shall ensure that all the Subcontractor's personnel who work on the site and/or may be exposed to hazardous substances, health hazards or safety hazards are thoroughly trained according to the requirements of Occupational Safety and Health Administration regulations, including 29 CFR 1926.1101 and 29 CFR 1910.120, as well as Michigan Public Act 440 of 1988, Rule 6601, as amended, and are advised as to the potential risks in working at the project site. To the extent the specified Work requires the handling, storage and/or disposal of such regulated waste materials, all personnel engaged in on-site abatement work must have completed the appropriate level of training as required by the State of Michigan and the Occupational Safety and Health Administration governing the removal of ACBM. A copy of such training/certification shall be provided within 10 calendar days after Notice of Award for documentation.

B. Lead containing paint has been identified within the Project Area. Subcontractor shall ensure that employees who may be exposed to lead are provided with appropriate training and protection pursuant to R325.51992 of the Michigan Administrative Code Part 603, Lead Exposure in Construction. Michigan Part 523 Abrasive Blasting.

END OF SECTION

SECTION 01200
PROJECT MEETINGS

1. PROJECT MEETINGS

A. The Design-Builder shall schedule, chair and administer all periodic meetings throughout the progress of the work for the purpose of coordinating and expediting the work. Each Subcontractor and supplier attending the meetings shall be authorized to act on decisions made at the meetings and each Subcontractor who should be in attendance will be held responsible for information and directions given at the meeting.

B. On-site project coordination/progress meetings will be held on a weekly basis or as appropriate throughout the life of the project. At a minimum, each Subcontractor shall be prepared to discuss the following:

1. Safety issues.
2. Actual vs. scheduled progress for the prior two-week period.
3. Planned construction activities for the next four weeks.
4. Problems with, revisions to and corrective measures and procedures to regain the construction schedule, if required.
5. Review of off-site fabrication and delivery schedules.
6. Document clarification requests.
7. Coordination items with other Subcontractors.
8. Changes in the work affecting cost and/or time.
9. Submittals and shop drawings.
10. Field observations, problems or conflicts.
11. Quality control issues and non-conformance resolutions.

C. Special meetings shall be called by the Design-Builder to resolve safety issues, construction problems, quality requirements, etc. All Subcontractors must work through the Design-Builder for resolving questions and differences.

END OF SECTION

SECTION 01300
SUBMITTALS

PART 1 GENERAL

1. SUBMITTAL PROCEDURES

A. The Subcontractor will furnish, within seven (7) days of the Letter of Intent or notification of subcontract award, a complete listing of all required submittals and submittal dates.

B. The Subcontractor shall identify Project, Subcontractor or supplier, Bid Package Number(s), pertinent Drawing sheet and detail number(s), and specification section number, as appropriate on each submittal. The Subcontractor shall provide clear space for review stamps.

C. The Subcontractor shall apply Subcontractor's stamp, date, sign or initial certifying that review, verification of Products required, field dimensions, adjacent construction work, and coordination of information, is in accordance with the requirements of the Work and Subcontract Documents. Submittals that in the opinion of the Design-Builder, the Architect/Engineer or Design Consultant(s) that have not been fully checked by the Subcontractor for compliance with the Subcontract Documents, may be returned to the Subcontractor without action. No extension of time will be allowed because of this action.

D. The Subcontractor shall coordinate submittals of related items and for interfacing work.

E. The Subcontractor shall prepare and deliver its submittals to the Design-Builder in a manner consistent with the Progress Schedule and in such time so as not to delay the Design-Builder or others in the performance of the Work. The Design-Builder will review and forward submittals to the Architect/Engineer and/or Design Consultant(s) as set forth in the Subcontract Documents. Upon receipt of each submittal by the Architect/Engineer and/or Design Consultant(s), action will be taken with such reasonable promptness as to cause no delay in the Work. A minimum of fourteen (14) days will be allowed for each review.

F. The Subcontractor shall order no material or perform any portion of the Work for which the Subcontract Documents require submittal and review of Shop Drawings, Product Data, Samples or similar submittals until the respective submittal has been approved by the responsible Architect/Engineer and/or Design Consultant(s).

G. The review of submittals such as Shop Drawings, Product Data and Samples is not performed for the purpose of determining the accuracy and completeness of dimensions, quantities and other details or for substantiating instructions for installation or performance of equipment or systems, all of which remain the responsibility of the Subcontractor as required by the Subcontract Documents.

H. The Subcontractor shall not be relieved of responsibility for errors or omissions in Shop Drawings, Product Data, Samples or similar submittals by the Architect/Engineer's or Design Consultant's approval thereof.

I. The approval of any Subcontractor submittal shall not be deemed to authorize deviations, substitutions or changes in the requirements of the Subcontract

Documents unless expressed written approval is obtained from the Design-Builder, Owner and Architect/Engineer authorizing such deviation, substitution or change.

J. The Subcontractor shall identify variations from Subcontract Documents and Product or system limitations that may be detrimental to successful performance of the completed Work.

K. The Architect/Engineer or Design Consultant's review of submittals does not mean or imply final acceptance of materials or equipment actually furnished or installed if such should be defective or not as represented by approved shop drawings or as otherwise required by the Subcontract Documents.

L. The Subcontractor shall direct specific attention, in writing or on resubmitted Shop Drawings, Product Data, Samples or similar submittals, to revisions other than those requested by the Architect/Engineer or Design Consultant on previous submittals. Without such written notice the Architect/Engineer or Design Consultant's approval of a resubmission shall not apply to such revisions.

M. If the Contract Documents specifically require the Subcontractor to provide professional design services or certifications by a design professional related to systems, materials or equipment to satisfactorily complete the Subcontract Work, the Owner and the Architect/Engineer will specify all performance and design criteria that such services must satisfy unless the Subcontractor needs to provide such services in order to execute the Subcontractor's responsibilities for construction means, methods, sequences, procedures and techniques. Design services provided by the Subcontractor shall be procured from licensed design professionals retained by the Subcontractor as permitted by the law of the place where the Project is located and the design professional's signature and seal shall appear on all drawings, calculations, specifications, certifications, shop drawings and other submittals prepared or submitted by such professional. The Design-Builder, Owner and Architect/Engineer are entitled to rely on the completeness of services, adequacy, accuracy and certifications or approvals performed by such design professionals, provided the Owner and the Architect/Engineer have specified all performance and design criteria that such services must satisfy. The Architect/Engineer will review and approve or take appropriate action upon the Subcontractor's submittals but only for the limited purpose of checking for conformance with information given and the design concept expressed in the Contract Documents. The Design-Builder shall not be responsible for the adequacy of the performance or design criteria required by the Contract Documents.

N. The Design-Builder shall retain one set of submittals at the Project.

2. SHOP DRAWINGS

A. SHOP DRAWINGS are drawings, diagrams, schedules and other data specially prepared for a particular scope of work and furnished by a subcontractor, manufacturer, supplier or distributor to illustrate some portion of the Work.

B. Shop drawings are required for all fabricated materials, specialty items, and purchased equipment, and shall consist of six (6) prints of each shop drawing or printed page or an electronic copy emailed to our office.

C. The shop drawings from any one source shall be uniform in size as far as possible, but in no case smaller than 8-1/2" x 11" or larger than 30" x 42". Each shop drawing shall have a clear space not less than 5-1/2" x 3-1/2" for the review stamp(s).

D. The Subcontractor shall submit shop drawings to the Design-Builder in strict compliance with the Subcontract Document requirements.

E. The Subcontractor remains responsible for details and accuracy, for confirming and correlating all quantities and dimensions, for selecting fabrication processes, for techniques of assembly, and for performing its Subcontract Work in a safe manner.

F. Structural Shop Drawings shall bear the seal of a Professional Engineer registered in the State of the project's location if specified in the Subcontract Documents.

G. Shop Drawings shall include appropriate for product:

1. Members – Sizes, spacing, attachments and fasteners, cambers, loads, connections, design calculations, and locations and size openings. Include erection drawings, elevations, and details where applicable. Indicate welded connections with AWS A2.0 welding symbols. Indicate net weld lengths.

2. Fabrication – Profiles, sizes, dimensions, connections, attachments, anchorage, size and type of fasteners, and accessories. Include plans, elevations, and details as required to fully describe work.

3. Finishes – Indicate finishes including decorative laminate, paint color, stain and sealer, and other finishes. Obtain approval for finishes before ordering.

4. Hardware – Profiles, sizes, function, dimensions, grade, finish and attachment.

3. PRODUCT DATA

A. PRODUCT DATA are illustrations, standard schedules, performance charts, instructions, brochures, diagrams and other information, furnished by a Subcontractor, manufacturer, supplier or distributor to illustrate some portion of the Work.

B. The Subcontractor shall submit product data as required by various specification sections to the Design-Builder. For standard products and items, product data may be submitted in the manufacturer's standard form. A minimum of six (6) copies is required.

C. Information pertaining to several sizes of grades of one classification of equipment or product, or to several components of a specific system or item of equipment, shall be of uniform size and be bound together in a folder. Particular items to be furnished shall be clearly indicated on each sheet. Supplement the manufacturer's standard data to provide information unique to this project.

D. Each submittal shall have clear space, not less than 5-1/2" x 3-1/2", located in the lower right or lower left hand corner for the review stamp(s).

4. SAMPLES

A. Samples are physical examples that illustrate materials, equipment or workmanship and functional and aesthetic characteristics by which the work will be judged.

B. For products requiring approval, submit three (3) samples, which will be retained.

C. Submit three (3) sets of samples for items specified as "finish selected by..." . Samples indicate colors, textures and patterns available.

D. Reviewed samples that may be used in the work are indicated in individual Specification Sections. Samples will not be returned.

5. MANUFACTURER'S CERTIFICATES

A. When specified in individual specification Sections, submit six (6) copies of manufacturer's certificate to Design-Builder for Architect/Engineer.

B. Indicate material or Product conforms to or exceeds specified requirements. Submit supporting reference data, affidavits, and certifications as appropriate.

C. Certificates may be recent or previous test results on material or Product, but must be acceptable to the Design-Builder and Architect/Engineer.

END OF SECTION

SECTION 01400
QUALITY CONTROL

PART 1 GENERAL

1. TESTING

A. Each Subcontractor shall coordinate and schedule all required tests, approvals and inspections of the Subcontract Work at appropriate times so as not to delay the progress of the project. The Subcontractor shall give proper written notice to the Design-Builder and all required parties of such tests, approvals and inspections.

B. The Design-Builder or Owner will employ, without cost to the Subcontractors, testing firm(s) to perform such engineering laboratory services and on-site inspection as deemed necessary by the Design-Builder to determine compliance with the requirements of the Subcontract. This work will not be a service to the Subcontractors for the performing of tests and checking of materials required of the Subcontractors.

C. The testing firm(s) employed by the Design-Builder or Owner will report directly to the Design-Builder or Owner. Copies of test and inspection reports will be furnished to the appropriate Subcontractors. The laboratory and their representatives will be instructed to promptly call to the attention of the Subcontractor, any instance of non-compliance with the requirements of the Subcontract. Failure to so notify the Subcontractor shall not relieve the Subcontractor of any of their responsibilities for compliance or making good workmanship or materials that are not in compliance with the requirements of the Subcontract.

D. The testing firms shall provide inspection and testing, and report results including, but not limited to the following:

1. Inspection and testing of placed and compacted soils.
2. Inspection and testing of bituminous paving.
3. Testing of concrete.
4. Inspection and testing of masonry, grout, and mortar.
5. Inspection and testing of structural fabrication, welds, and connections.

E. Each Subcontractor shall cooperate with the testing firms and provide labor to assist with sample preparations where applicable.

F. All inspection services for the Subcontract Work required by specification Division15, 16 and 17 shall be provided and paid for by the Subcontractor performing the work.

2. QUALITY ASSURANCE/CONTROL OF INSTALLATION

A. Each Subcontractor is responsible to monitor quality control over suppliers, manufacturers, products, services, site conditions, and workmanship to produce work of specified quality.

B. Each Subcontractor shall comply fully with manufacturers' instructions, including each step in sequence.

C. Should manufacturers' instructions conflict with Subcontract Documents, request clarification from Design-Builder before proceeding.

D. Each Subcontractor shall comply with specified standards as a minimum quality for the Subcontract Work except when more stringent tolerances, codes, or specified requirements indicate higher standards or more precise workmanship.

E. Each Subcontractor shall perform work by persons qualified to produce workmanship of specified quality and employ personnel licensed or approved by manufacturer when such employment is a condition of manufacturer's warranty.

F. The Subcontractor shall secure products in place with positive anchorage devices designed and sized to withstand stresses, vibration, physical distortion or disfigurement.

3. QUALITY MANAGEMENT AND CONTROL PROGRAM

A. The Subcontractors shall participate in the Design-Builder's Quality Management and Control Program.

B. The goal of the Quality Management and Control Program shall be for all persons associated with the project to be a proactive team member working for the highest quality project possible in conformance with plans and specifications.

C. The Subcontractor shall perform sufficient inspection and testing of all items of work including that of Sub-subcontractors to ensure conformance to applicable specifications and drawings with respect to the materials, equipment, workmanship, fabrication, construction, finish, functional performance and identification. Subcontractor shall provide for surveillance, tests and submittals in accordance with the Subcontract Documents, including applicable on-site and off-site inspection.

D. Each Subcontractor shall designate an on-site Quality Control Manager/Superintendent who is competent and qualified to:

1. Communicate directly with the Design-Builder's Project Manager.

2. Attend Preconstruction, Quality Control, and Progress Meetings held weekly or as required.

3. Complete and submit daily construction reports to the Design-Builder.

4. Be the Subcontractor's authorized agent whose notification on-site shall be one and the same as notification of Subcontractor's home office.

5. Be named by the Subcontractor and remain assigned to the project for the entire duration, including Punch List, unless an approval is granted in writing by the Design-Builder to replace.

6. Implement the Subcontractor's Safety program and submit to Design-Builder applicable safety reports, checklists and meeting notes.

E. Subcontractor shall submit name of Quality Control Supervisor in writing to the Design-Builder at the Post Bid Information Meeting using form of letter on following page.

END OF SECTION

Gundlach Champion, Inc.
180 Traders Mine Road
Iron Mountain, MI 49801
(906) 779-2303 v
(906) 779-8947 f

Re: Chippewa County – City / County Building Renovation

Dear Project Manager:

This letter is to advise you that _____ has been appointed our Quality Control Supervisor for the above referenced project.

His/Her duties are to see that the project is constructed in accordance with the plans and specification prepared for the project and that quality levels set by the contract documents are maintained or exceeded throughout the course of construction, and become proactively involved in the quality management and safety of this project.

I authorize my Quality Control Supervisor to make decisions as needed to carry the work forward in a timely manner and in a manner consistent with high construction standards. This includes the procurement of needed materials and workmen when not adequately provided by my office beforehand.

In addition, he/she is authorized to halt the construction of any and all activities which, in his/her or your opinion, are not proceeding at the levels required until such time as corrective efforts have been made to re-establish the required quality. He/She is also authorized to order the reworking or replacement of any items that are not up to the required levels.

I also give him/her the authority to make and test, consult with any specialist, and refer to any documents that, in his opinion will aid in making an intelligent appraisal of the work.

Sincerely,

Name _____

Title _____

Company _____

Date _____

I hereby acknowledge receipt of this letter and accept the responsibility of Quality Control Supervisor for the above project and company.

Company Quality Control Supervisor _____

Date _____

SECTION 01500
CONSTRUCTION FACILITIES & TEMPORARY CONTROLS

1. TEMPORARY ELECTRICAL POWER AND LIGHTING

A. The Owner will pay for electrical energy to operate temporary electrical power and lighting for the duration of the project.

B. Temporary Electrical Power: The Electrical Subcontractor (Bid Package 16000) shall install, maintain and remove the temporary electrical service and distribution system for use by the Design-Builder and all Subcontractors during the construction period.

1. The Electrical Subcontractor (Bid Package 16000) shall provide and maintain a minimum of three (3) temporary distribution panels located as directed by the Design-Builder. Locations will be selected with the intent that any point in the building may be reached with a 100 ft. extension cord. Each distribution panel shall have a minimum of eight (8) 20-amp ground fault protected duplex receptacles. As partitions are completed, service locations shall be added and/or relocated to maintain the capacity of reaching any point in the building with a 100 ft. extension cord.

2. All special power requirement hookups for welders, equipment and the like, shall be provided by the Subcontractor (bid package) requiring the same.

C. Temporary Lighting: The Electrical Subcontractor (Bid Package 16000) shall provide and maintain throughout the building, temporary lighting according to MIOSHA Standards. The Electrical Subcontractor shall be responsible for replacing all lamps as required daily to maintain the above. Each lamp must be rated at least 100 watts. Voltage of each socket must be at least 100 volts. Removal of all temporary lighting will be by the Electrical Subcontractor and coordinated with the Design-Builder.

1. Lighting for field offices, storage trailers, shop and outdoor work areas will be provided by each Subcontractor requiring the same.

D. All temporary electrical installations shall be in compliance with the latest National Electrical Code (N.E.C.) or MIOSHA whichever is more stringent.

E. Any electrical requirements for power or lighting beyond those listed in this Article (including energy charges) shall be the responsibility of the Subcontractor requiring them.

F. When the permanent electrical power and lighting systems are in operating condition, they may be used for temporary power and lighting for construction purposes provided that the Electrical Subcontractor:

1. Obtains the approval of the Architect/Engineer and/or Owner through the Design-Builder.

2. Assumes full responsibility for operation of the entire power and lighting systems.

3. Verifies that warranty dates are established prior to usage of equipment and lamps.

4. Pays costs of maintenance and restoration of the Systems.

5. Cleans permanent power and lighting systems used during construction.

2. TEMPORARY HEATING AND WEATHER PROTECTION

A. Temporary heating requirements during the course of construction shall be divided into two categories as follows:

1. Cold weather protection.

2. Temporary heating.

B. Cold weather protection.

1. Heating and protection required during the construction period prior to enclosure of the building shall be classified as "cold weather protection".

2. Each Subcontractor shall provide cold weather protection, necessary to allow their work to continue.

C. Temporary Heating.

1. Daily construction heat will be the responsibility of the Mechanical Subcontractor (Bid Package 15000) to maintain. The existing system may be used.

2. The Owner will pay for the cost of energy used to operate the system classified as "temporary heating".

3. The openings in exterior walls will be covered by the Subcontractor creating the opening.

4. In areas of the building where work is being conducted, the temperature shall not be less than 50 degrees F for interior rough-in and not less than 60 degrees F during finishes installation.

5. Each Subcontractor shall provide supplemental heat as required for a particular installation.

6. Each Subcontractor shall provide any necessary forced ventilation for curing of installed materials, to dispense humidity, and to prevent hazardous accumulations of dust, fumes, vapors or gases.

7. When the permanent heating system is in operating condition, the system may be used for temporary heating, provided the Mechanical Subcontractor (Bid Package 15000) obtains approval from the Design-Builder in writing for its use and any special provisions required for its temporary operation and its use does not jeopardize the equipments warranty.

3. TEMPORARY WATER SERVICE

A. Each Subcontractor will be responsible for temporary water.

B. Each Subcontractor shall be responsible to provide containers, paper cups, ice, hoses, and potable water for their needs.

4. TEMPORARY TOILET FACILITIES

A. The Design-Builder shall provide and maintain adequate toilet facilities in accordance with MIOSHA requirements in a clean and sanitary condition for the use of all Subcontractors. The Owner's existing or new facilities shall not be used by construction personnel.

5. TEMPORARY FIRE PROTECTION

A. Each Subcontractor shall at all times exercise every precaution for prevention of fire and make timely and adequate provisions for safety of persons and property in event of fire.

B. Each Subcontractor shall provide fire protection for its portion of the Work. It shall furnish fire extinguishers and/or other fire fighting devices and equipment, of types and in such quantities as are adequate to insure a high degree of fire safety.

C. Whenever Work of a particularly hazardous nature is being done, the Subcontractor doing such Work shall provide additional or special fire protection as may be necessary.

D. Gasoline, if used on the job, must be contained in safety cans equipped with flame arresters and spring-loaded caps and stored in a safe place, protected from damage.

6. TEMPORARY STAIRS, LADDERS, RAMPS, RUNWAYS AND BARRICADES

A. Each Subcontractor is to provide and maintain all necessary ladders, ramps, and runways to facilitate conveyance of men, materials, tools, and equipment for proper execution of their work. All protection and safety barricades, devices, covers, etc. shall be provided by each Subcontractor as it relates to the safe conduct of their work and protection of people and property in their work area in accordance with MIOSHA requirements.

B. Any Subcontractor performing excavation work shall be responsible to furnish, install and maintain temporary barricades and/or fencing of all open excavations until such time as the backfilling is complete. Flasher lights shall be provided on barricades and fencing by the Subcontractor as requested by the Design-Builder in accordance with MIOSHA. As a minimum, all barricades across roads and walks shall have lights on them in working condition.

C. Each Subcontractor shall provide temporary guardrails at the building floor perimeters, interior shafts or other openings, immediately after the establishment of any safety exposure. If needed, these temporary guardrails or barricades shall be left in place after completion of the work for the use of all other Subcontractors. The Design-Builder shall maintain and remove said guardrails. Each Subcontractor that disturbs any temporary protection for their work is responsible to protect the area during their work and to reinstall to its original condition the guardrail or barricade system for the protection of the works and others until final construction of perimeter exterior wall and/or shaft openings is completed. All other protection and safety barricades, devices, covers, etc. shall be provided by this Subcontractor as it relates to the safe conduct of their work in accordance with all local, state and federal regulations and the requirements of the contract documents, and shall be in accordance with the most stringent requirements.

D. Each Subcontractor shall provide and maintain in good repair barricades, overhead protection, guardrails, etc., as required by law or necessary for the protection of the public and personnel engaged in the work from hazards incidental to this contract.

Each Subcontractor should do everything necessary to protect the Owner's employees, the public and workmen from injury or damage to vehicles or other property.

7. TEMPORARY MATERIAL HOISTING

A. Each Subcontractor is responsible for their own hoisting and material/equipment movement costs as required to complete the work for their contract.

8. SCAFFOLDING

A. Each Subcontractor is responsible for providing and maintaining any and all ladders, scaffolds and other staging as required to complete their work. All such ladders, scaffolds and staging equipment shall be erected, maintained, and subsequently removed by each Subcontractor in accordance with all applicable safety regulations.

9. PROTECTION OF UNDERGROUND FACILITIES

A. Each Subcontractor shall provide and maintain proper shoring and bracing for existing underground utilities, sewers, and building foundations, encountered during their excavation work, to protect them from collapse or movement, or other type of damage until such time as they are to be removed, incorporated into the new work or can be properly backfilled upon completion of new work. Prior to beginning any excavation, the Subcontractor shall contact Miss Dig (811 or 800-482-7171) or appropriate agency and utility companies for the location of all existing underground services and provide, if requested, documentation to the Design-Builder of such contact.

B. Utilities and/or other services which are shown, or not shown but encountered, shall be protected by the Subcontractor from any damage caused as a result of work and operations, unless or until they are abandoned. If the utilities or services are damaged from their work or operations the Subcontractor shall immediately repair any damage and restore the utilities and services to an equal or better condition than that which existed prior to the damage. The Subcontractor will be responsible for all liabilities or claims resulting from such damage and will defend and hold harmless and indemnify Owner and Design-Builder from any claims or lawsuits.

C. Each Subcontractor shall be responsible for all damage to the project, including the existing buildings and grounds, due to their operations under this contract. Repair or replacement of damaged items shall be to the satisfaction of the Owner and Design-Builder.

10. WATER CONTROL

A. All pumping, bailing or well point equipment necessary to keep excavation and trenches free from the accumulation of water during the entire excavating and backfilling progress of this work shall be the responsibility of the Subcontractor performing said excavations and trenches.

B. Water shall be disposed of in such a manner as will not endanger public health or cause damage or expense to public or private property. The requirements of any public agencies having jurisdiction shall be abided by.

11. TEMPORARY ENCLOSURES

A. The General Trades Subcontractor is to provide temporary weather-tight closure of exterior openings and interior partitions to accommodate acceptable working conditions and protection for Products, to allow for temporary heating and maintenance of required ambient temperatures identified in individual Specification Sections, and to prevent entry of unauthorized persons.

B. An allowance of $20,000 will be allocated for Temporary Enclosures and Partitions by the 06000 General Trades Subcontractor.

12. PROTECTION OF INSTALLED WORK

A. Each Subcontractor shall take the necessary precautions to properly protect the Subcontract Work and the work of others from damage caused by the Subcontractor's operations. Should the Subcontractor cause damage to the property of the Owner, the Design-Builder or others, the Subcontractor shall promptly remedy such damage to the satisfaction of the Design-Builder and Owner or the Design-Builder may remedy the damage and deduct its cost from any amounts due or to become due the Subcontractor, unless such costs are recovered under applicable property insurance.

B. Each Subcontractor shall provide temporary and removable protection for installed Products and control activity in immediate work area to minimize damage.

C. Each Subcontractor shall provide protective coverings at walls, projections, jambs, sills, and soffit of openings.

D. Each Subcontractor shall protect installed materials that are susceptible to damage from sunlight or precipitation and prolonged exposure to these conditions until material is covered by successive work.

E. Each Subcontractor shall protect finished floors, stairs, and other surfaces from traffic, dirt, wear, damage, or movement of heavy objects by protecting with durable sheet materials.

F. Each Subcontractor shall prohibit traffic or storage upon waterproofed or roofed surfaces. If traffic or activity is necessary, the installer of the roofing system will provide recommendations for protection from waterproofing or roofing material manufacturer. These recommendations will be provided to the Design-Builder who will in turn distribute them to the appropriate Subcontractors. Subcontractors not adhering to the recommended protection requirements and as a direct result causing damage to the roofing system, will be responsible for all repair costs.

G. Each Subcontractor shall prohibit traffic from entering landscaped areas.

13. SNOW REMOVAL

A. Subcontractors performing work under exposed conditions shall remove snow and ice for the protection and execution of their work. Keeping traffic areas within the project limits free of snow shall be the responsibility of the Design-Builder.

14. CONSTRUCTION CLEANING

A. The Subcontractor shall at all times during its performance of the Subcontract Work keep the worksite clean and free of debris resulting from the Subcontract Work. Prior to discontinuing the Subcontract Work in an area, the Subcontractor shall clean the area and remove all its rubbish and its construction equipment, tools, machinery,

waste and surplus materials. Subcontractor shall make provisions to minimize and confine dust and debris resulting from its construction activities.

B. The 06000 General Trades Subcontractor is responsible for the cost of dumpsters on site and the dumping fees to a certified landfill.

An Allowance of $10,000 will be allocated for Dumpster Fees by the 06000 General Trades Subcontractor.

C. If the Subcontractor fails to begin compliance with cleanup duties within twenty-four (24) hours after receipt of written notification from the Design-Builder of non-compliance, the Design-Builder may implement appropriate cleanup measures without further notice and the cost thereof shall be deducted from any amounts due or to become due the Subcontractor.

D. Final Cleanup. Each Subcontractor shall execute final cleaning prior to final inspection in accordance with manufacturer's recommendation and as required within the technical sections of the specifications governing work under their Subcontract.

15. SAFETY

A. Each Subcontractor is required to perform the Subcontract Work in a safe and reasonable manner. Each Subcontractor shall take reasonable precautions for safety of, and shall provide reasonable protection to prevent injury, damage or loss to:

1. Employees and other persons at the site;

2. Materials and equipment stored at the site or at off-site locations for use in performance of the Subcontract Work;

3. All property and structures located at the site and adjacent to the work areas, whether or not said property or structures are a part of the Project or involved in the Subcontract Work.

B. Each Subcontractor shall furnish all required notices and comply with all applicable rules, regulations orders and other lawful requirements established to prevent injury, loss or damage to persons or property.

C. The Subcontractor shall exercise extreme care in executing any of the Subcontract Work that involves explosive or other dangerous methods of construction or hazardous procedures, materials or equipment. The Subcontractor shall use properly qualified individuals or entities to carry out the Subcontract Work in a safe and reasonable manner so as to reduce the risk of bodily injury or property damage.

D. The Subcontractor is required to designate an individual at the site in the employ of the Subcontractor who shall act as the Subcontractor's designated safety representative with a duty to prevent accidents. Unless otherwise identified in writing to the Design-Builder, designated safety representative shall be the Subcontractor's project superintendent.

E. The Subcontractor shall not overload the structures or conditions at the site and shall take reasonable steps not to load any part of the structures, or site so as to give rise to an unsafe condition. The Subcontractor shall have the right to request, in writing, from the Design-Builder loading information concerning the structure at the site.

F. Each Subcontractor shall establish its own safety program implementing safety measures, policies and standards conforming to those required or recommended by

governmental and quasi-governmental authorities having jurisdiction and by the Design-Builder and Owner, including, but not limited to, requirements imposed by the Contract Documents. The Subcontractor shall comply with the reasonable recommendations of insurance companies having an interest in the Project, and shall stop any part of the Subcontract Work that the Design-Builder deems unsafe until corrective measures satisfactory to the Design-Builder have been taken. If the Subcontractor fails to take such corrective measures, the Design-Builder may do so at the expense of the Subcontractor. The Design-Builder's failure to stop the Subcontractor's unsafe practices or the Design-Builder's efforts to take corrective measures shall not relieve the Subcontractor of its responsibilities or liabilities.

G. The Subcontractor shall notify the Design-Builder immediately following an accident and promptly confirm the notice in writing. A detailed written report shall be furnished if requested by the Design-Builder.

16. FIELD OFFICES

A. If needed, location and duration of trailer space is to be coordinated and approved by the Design-Builder.

B. Each Subcontractor shall make provisions for his own field office, utilities and telephone as required to perform his work. All costs related shall be included in the Base Bid. Also reference Part 1 - TEMPORARY ELECTRICAL POWER AND LIGHTING of this specification section 01500.

C. The Design-Builder's field offices and office telephones shall be for the exclusive use of the Design-Builder, except in case of emergency.

D. All of the above shall be installed and maintained in accordance with applicable Building Code Requirements.

17. PROJECT SIGNAGE

A. The Design-Builder may provide a project sign. No other signs or advertising shall be displayed on the premises without the approval of the Owner and Design-Builder. This does not exclude the posting of required trade notice and cautionary signage by Subcontractors.

END OF SECTION

SECTION 01600
MATERIALS AND EQUIPMENT

PART 1 GENERAL

1. PRODUCTS

   A. Products: Means new material, machinery, components, equipment, fixtures, and systems forming the Subcontract Work. Does not include machinery and equipment used for preparation, fabrication, conveying and erection of the Subcontract Work. Products may also include existing materials or components required for reuse.

   B. Products other than those specified by manufacturer made of recycled or reused materials must be reviewed for approval. Submit manufacturers or suppliers certification of performance with request for approval.

2. TRANSPORTATION AND HANDLING

   Subcontractor shall:

   A. Transport and handle Products in accordance with manufacturer's instructions.

   B. Deliver products wrapped and crated in manufacturer's original shipping packaging in a manner to prevent damage to components or marring of surfaces. Mark each package for installation location.

   C. Package hardware items individually, label and identify package with door opening code to match hardware schedule. Deliver keys to Design-Builder by security shipment direct from hardware supplier.

   D. Transport products to prevent twisting, warping or detrimental exposure to elements.

   E. Promptly inspect shipments to assure that Products comply with requirements, quantities are correct, and Products are undamaged.

   F. Provide equipment and personnel to handle Products by methods to prevent soiling, disfigurement, or damage. Lifting or handling equipment shall be capable of supporting products in positions anticipated during storage, transportation, and erection.

   G. File required claims for Products damaged in transport.

3. STORAGE AND PROTECTION

   Subcontractor shall:

   A. Store and protect Products in accordance with manufacturer's instructions, with seals and labels intact and legible.

   B. Store temperature sensitive products for 24 hours prior to application within temperature range as recommended by the manufacturer for best workability.

   C. For exterior storage of fabricated Products, place on sloped supports above ground.

D. Store preformed and manufacturer finished material in a clean, dry area, stack flat to prevent twisting, bending, or abrasion, blocked off ground to prevent sagging, and to provide ventilation.

E. Prevent contact during storage with materials that may cause discoloration, staining, or damage.

F. Provide off-site storage and protection when site does not permit on-site storage or protection.

G. Cover Products subject to deterioration with impervious sheet covering. Provide ventilation to avoid condensation. Store organic and porous materials off ground in ventilated and protected manner to prevent deterioration from moisture.

H. Store sensitive Products in weather-tight, climate controlled enclosures. Store loose granular materials on solid flat surfaces in a well-drained area; prevent mixing with foreign matter. Store cementitious materials and aggregates in manner to prevent wetting, deterioration or intrusion of foreign materials.

I. Provide equipment and personnel to store Products by methods to prevent soiling, disfigurement, or damage.

J. Arrange storage of Products to permit access for inspection. Periodically inspect to assure Products are undamaged and are maintained under specified conditions.

K. Store ferrous items off the ground and in a manner to prevent damage to the corrosion resistant coatings.

4. PRODUCT OPTIONS AND SUBSTITUTIONS

A. Products Specified by Reference Standards or by Description Only:

1. Any Product meeting those standards or description.

B. Products Specified by Naming One or More Manufacturers with a Provision for Substitutions.

1. Design is generally based on product of first manufacturer named. Products of other manufacturers named are acceptable.

2. Alteration to work required by selection of another listed manufacturer or of approved substitution shall be the responsibility of the Subcontractor.

3. Submit a written request for substitution for any manufacturer not named. Provide sufficient information to determine acceptability of such products.

4. Substitutions will be considered during the bid period if the Subcontractor can document unacceptable delay of work will result if substitute is not accepted. Subcontractor's failure to place orders in appropriate and timely manner is not an acceptable delay and will not permit substitution.

5. The Architect/Engineer or Design Consultant and Design-Builder will issue an Addendum for accepted products to plan rooms, known subcontract bidders and product suppliers requesting substitution.

END OF SECTION

SECTION 01650
STARTING OF SYSTEMS

1. STARTING SYSTEMS

   A. Subcontractor shall direct the check-out and operation of systems and equipment for readiness, and assist in their initial startup and the testing of the Subcontract Work.

   B. Subcontractor shall coordinate schedule for start-up of various equipment and systems.

   C. Subcontractor shall notify Design-Builder seven days prior to start-up of each item.

   D. Subcontractor shall verify that each piece of equipment or system has been checked for proper lubrication, drive rotation, belt tension, control sequence, or other conditions that may cause damage.

   E. Subcontractor shall verify that tests, meter readings, and specified electrical characteristics agree with those required by the equipment or system manufacturer.

   F. Subcontractor shall verify wiring and support components for equipment are complete and tested.

   G. Subcontractor shall execute start-up under supervision of applicable representative in accordance with manufacturer's instructions.

   H. When specified in individual specification Sections, Subcontractor shall require manufacturer to provide authorized representative to inspect, check and approve equipment or system installation prior to start-up, and to supervise placing equipment or system in operation.

   I. Subcontractor shall submit a written report to the Design-Builder that equipment or system has been properly installed and is functioning correctly within 14 days after performing the start-up per this section.

   J. Subcontractor shall make follow-up visits to the Project as required to confirm or make the necessary adjustments to insure the equipment, systems and controls are all functioning correctly.

2. TESTING, ADJUSTING AND BALANCING

   A. The HVAC and Plumbing Subcontractor, will appoint, employ and pay for services of an independent firm to perform testing, adjusting and balancing.

   B. Independent firm will perform services per the Subcontract Documents.

   C. Reports will be submitted by independent firm to Design-Builder indicating observations and results of tests and indicating compliance or non-compliance with requirements of Subcontract Documents. Design-Builder shall provide for inclusion of reports in the Operation and Maintenance Manual.

END OF SECTION

SECTION 01700
CONTRACT CLOSEOUT

PART 1 GENERAL

1. CLOSEOUT PROCEDURES

   A. Each Subcontractor shall submit written certification that Contract Documents have been reviewed, Subcontract Work has been inspected, and that Subcontract Work is complete in accordance with Contract Documents and ready for Design-Builder inspection.

   B. Subcontractor shall submit certificates of testing, inspections or approvals required by the Contract Documents to the Design-Builder.

   C. Subcontractor shall provide submittals to Design-Builder as required by governing or other authorities.

   D. Subcontractor shall submit final Application for Payment identifying total adjusted Contract Sum, previous payments, and sum remaining due.

   E. Before issuance of a Final Certificate, each Subcontractor shall submit evidence satisfactory to the Design-Builder that all payrolls, material bills, and other indebtedness connected with the work and for which the Subcontractor is responsible, have been paid.

   F. Subcontractor shall submit final waivers of liens, sworn statement, affidavits, warranties, guarantees, consent of surety, if any, as-built drawings (record documents), operation and maintenance manuals or other documentation required by the Contract Documents.

   G. Insurance requirements. Each Subcontractor shall submit a certificate evidencing that insurance required by the Contract Documents to remain in force after final payment is currently in effect and will not be canceled or allowed to expire until at least thirty (30) days' prior written notice has been given to the Design-Builder. Provide a written statement that the Subcontractor knows of no substantial reason that the insurance will not be renewable to cover the period required by the Contract Documents.

2. FINAL CLEANING

   A. Subcontractor shall execute final cleaning prior to final inspection.

   B. All cleaning shall be in accordance with products manufacturer's recommendation.

   C. Final cleaning by each Subcontractor, as required within the technical sections of the specifications governing work under his Subcontract, shall include, but not be limited to the following:

      1. Removing all foreign matter, spots, oil and construction dust and cleaning, washing, waxing and polishing so as to put the project in a complete and finished condition ready for acceptance and use intended.

      2. Cleaning equipment and fixtures to a sanitary condition.

3. Cleaning debris from roofs, gutters, downspouts, and drainage systems.

4. Cleaning site, sweeping paved areas, raking clean landscaped surfaces.

5. Removing waste and surplus materials and construction facilities from site.

6. Cleaning interior and exterior glass and surfaces exposed to view; removing temporary labels, stains and foreign substances, polishing transparent and glossy surfaces, vacuuming carpeted and soft surfaces.

7. Adjusting operating Products and equipment to ensure smooth and unhindered operation.

8. Cleaning filters of operating equipment.

3. OPERATION & MAINTENANCE MANUAL

A. Prior to the Date of Substantial Completion, Subcontractor shall submit a proposed draft of their O&M Manuals to the Design-Builder for the Architect/Engineer's or Design Consultant's and Design-Builder's review.

B. Within thirty (30) days after the receipt of the proposed O&M Manuals, the Architect/Engineer or Design Consultant will review and return them to the Design-Builder for distribution to the respective Subcontractor.

C. No later than thirty (30) days prior to the Date of Substantial Completion, Subcontractors shall incorporate any revisions to their Manuals suggested and submit their Manuals in final form to the Design-Builder.

D. Subcontractor shall provide a list of any operation and maintenance manual items that are due, but not delivered, the reason(s) why delivery could not be accomplished, and the date on which delivery will be made.

E. Subcontractor shall submit three (3) sets bound in 8-1/2 x 11 inch text pages, three D side ring binders and durable plastic covers.

F. Subcontractor shall prepare binder covers with printed title "OPERATION AND MAINTENANCE INSTRUCTIONS", title of project.

G. Subcontractor shall internally subdivide the binder contents with permanent page dividers, logically organized as described below; with tab titling clearly printed under reinforced laminated plastic tables.

H. Contents: Subcontractor shall prepare a Table of Contents for each volume, with each product or system description identified, type on white paper in two parts as follows:

1. Part 1: Directory, listing names, addresses, and telephone numbers and contact person of Architect/Engineer, Design Consultant, Design-Builder, sub-subcontractors, and equipment suppliers.

2. Part 2: Operation and maintenance instructions, arranged by system. For each category, identify names, addresses, and telephone numbers and contact person of sub-subcontractors and suppliers.

Identify the following:

a. Significant design criteria.

b. List of equipment.

c. Parts list of each component.

d. Operating instructions.

e. Maintenance instructions for equipment and systems.

f. Maintenance instructions for finishes, including recommended cleaning methods and materials and special precautions identifying detrimental agents.

3. Manufacturer's Instructions are to include as a minimum the following:

a. Printed instructions for start-up and adjustments. Description of equipment, method of operation and control including motors, pump units, signals, and special or non-standard features provided.

b. Parts catalog with complete list of equipment replacement parts with equipment description and identifying numbers.

c. Schematic diagrams covering electrical equipment installed, including changes made in final work, with symbols listed corresponding to identity of markings on equipment.

4. Include test and balancing reports and required certificates of testing, inspections or approvals per Subcontract Documents.

5. Include control diagrams and sequence of operation by controls manufacturer as installed.

4. WARRANTIES

A. Categories of warranties required for the work include:

1. Special project warranty issued by the Subcontractor, and where required, countersigned by installer or other recognized entity involved in performance of the Subcontract Work.

2. Specified product warranty issued by a manufacturer or fabricator, for compliance with requirements in Subcontract Documents.

3. Coincidental product warranty available on a product incorporated into the work, by virtue of manufacture's publication of warranty without regard for application requirements (non-specified warranty). Refer to sections of Division 2 through 16 for requirements of specified warranties.

B. Upon receipt of written notification by the Design-Builder, Subcontractor shall provide three (3) notarized copies of warranties as required per the Subcontract Documents. The submittal of the requested warranties is due within 15 days upon receipt of notification.

C. The Subcontractor shall execute and assemble transferable warranty documents from sub-subcontractors, suppliers and manufacturers and verify documents are in proper form and contain full information prior to submittal.

D. The submittal shall include a Table of Contents and the warranties are to be assembled in a binder with durable plastic cover.

E. The submittal of warranties to Design-Builder is for Architect/Engineer or Design Consultant review when applicable. The approval of the Subcontractor's warranties for the Subcontract Work is required prior to the Subcontractor's Final Application for Payment.

F. Warranties shall commence on the date of Substantial Completion of the work that is established by the Design-Builder, Architect/Engineer and Owner.

G. For items of Work delayed beyond date of Substantial Completion, Subcontractor shall provide updated submittal within ten days after acceptance, listing date of acceptance as start of warranty period.

H. The Subcontractor agrees to correct all construction that proves to be defective in workmanship and materials within a period of **two (2) years** from the date of Substantial Completion or for such longer periods of time as may be set forth with respect to specific warranties required by the Subcontract Documents.

I. Design-Builder shall include accepted warranties in their respective sections in the Operations and Maintenance Manuals and submit to the Owner.

5. SPARE PARTS AND MAINTENANCE PRODUCTS.

A. Subcontractor shall provide products, spare parts, maintenance and extra materials in quantities specified in individual specification Sections.

B. Subcontractor shall deliver to Project site with itemized list; obtain receipt prior to final payment.

6. RECORD DOCUMENTS

A. Subcontractor shall insure that an accurate, on-going record is kept of all deviations from the approved design Drawings and Specifications. Maintain on site a set of record documents with entries that complete and accurate, enabling future reference by Owner.

B. Upon completion of Subcontract Work the Subcontractor shall submit two (2) marked sets of reproducible record documents to the Design-Builder.

C. Subcontractor shall obtain receipt for the marked sets and submit said receipt with request for Final Payment of the Subcontract. Final Payment due to the Subcontractor will be withheld until this clause has been fulfilled.

7. INSTRUCTION OF OWNER'S PERSONNEL

A. Before turnover to the Owner, the Design-Builder will coordinate a meeting with the Subcontractor and Owner to fulfill the Subcontractor's responsibility to instruct Owner's designated personnel in start-up, operation, control, adjustment, servicing, troubleshooting, maintenance and shutdown of equipment and systems specific to the Subcontractor's Work.

B. Subcontractor shall specifically instruct the Owner with regard to any equipment and systems requiring seasonal operation.

C. Subcontractor is to use operation and maintenance manuals as basis for instruction and review contents of manual with personnel in detail to explain all aspects of operation and maintenance.

D. Subcontractor shall prepare and insert additional data in Operation and Maintenance Manual when the need for such data becomes apparent during instruction.

END OF SECTION

H. SCOPES OF WORK

BID PACKAGE 02000
HAZARDOUS MATERIALS ABATEMENT

1.01 Scope of Work

This Section includes asbestos abatement, lead-containing paint management, and other hazardous materials abatement specific to the project. Detailed specifications for the removal and disposal of asbestos-containing materials by enclosure, glove bag, or entire structures methods are included.

Demolition, debris removal, and disposal of all Asbestos-Containing Building Materials (ACBM) identified by provisions of this Section, or shown on drawings, or identified at the site, shall be executed under the provisions of this Section, and other applicable sections of these specifications.

The extent of ACBM removal work is abatement of ACBM impacted by the demolition and renovation activities detailed on the drawings and specified in the Project Manual. The Abatement Contractor shall expect to mobilize to the project site a minimum of three times in order to phase the abatement work with work being performed by other contractors. The Abatement Contractor will be required to coordinate schedule and on site activities with other contractors working on the project site.

The scope of work is to include, but is not limited to, the following items:

1. Removal and disposal of ACBM window systems. The window glazing has tested positive for asbestos. Contractor shall remove identified window systems in entirety and temporarily seal openings to protect the building interior from the environment for several weeks.
2. Removal and appropriate disposal of ACBM fire doors.
3. Abatement of 9" x 9" vinyl asbestos tile (VAT) and asbestos-containing linoleum. Note that the associated mastic has tested negative for asbestos.
4. Abatement of thermal systems installation (TSI) associated with project demolition and renovation activities.
5. Removal of presumed lead impacted ventilation unit in the former shooting range.
6. Contractor shall perform work activities that impact lead-containing materials in accordance with the Michigan Administrative Code, Part 603: Lead Exposure in Construction.

1.02 Definitions

A. Asbestos Abatement Firm: Firm engaged to perform actual removal and disposal work, either as the CONTRACTOR or SUBCONTRACTOR.

B. Asbestos-Containing Building Material: The term "asbestos containing building material" is abbreviated as ACBM.

C. CONSULTANT: Firm engaged by OWNER to identify and measure asbestos containing materials, or to inspect demolition operations, including monitoring of air quality.

1.03 Submittals

A. Initial Submittals: Submit the following documents to CONSULTANT as required:

1. License from the State of Michigan in accordance with Act 135 P.A. 1986 (Asbestos Abatement Contractors Licensing Act).

2. Copy of notification sent to appropriate federal, state, and local agencies.

3. Schedule of removal, specifying work locations, length and number of shifts, foreman's name, and crew size.

4. Transportation/Disposal Firm Certificate: Letter, signed by CONTRACTOR, certifying that a listed, approved Transportation/Disposal Firm will be used. Include name and address of Transportation/Disposal Firm.

B. Waste Disposition Submittals: Submit to CONSULTANT signed waste shipment record stating that asbestos waste has been properly disposed in a landfill indicated in the "Quality Assurance" section of this specification Section. Submit the following:

1. Receipts (trip tickets) from approved landfill.

2. Asbestos Waste Shipment Record, as follows:

a. Prior to removing ACBM from the project site, record quantity and/or volume of ACBM and verify with CONSULTANT.

b. Ensure that the landfill operator provides a signed copy of the waste shipment record to the CONSULTANT within 35 days of the date that ACBM is removed from the project site. If waste is not transported directly from the project site to the landfill, the waste shipment record shall reflect each transfer.

c. The OWNER will not make final payment prior to receipt of signed waste shipment record.

C. Contract Closeout Submittals: Comply with the following additional requirements of Division I, Section "Project Closeout":

1. Schedule of Items Removed: Summarize the types of ACBM removed from the Project area.

2. Statement of Visual Inspection: Submit a statement of visual inspection signed by the CONTRACTOR's competent person/supervisor. Include the following:

1. Name of licensed contractor conducting work.
2. Name, signature, and title of on-site supervisor.
3. Name, location, and start and finish date of abatement work.
4. Current date.
5. Statement that the work was completed according to applicable federal, state, and local laws, and these specifications.
6. Statement that the Asbestos Abatement Firm's field supervisor has visually inspected the work site and has found no dust, debris, or other suspect ACBM that were part of the scope of work.

1.04 Quality Assurance

A. Pre-Qualified Disposal Organization: Engage an appropriate Type II Landfill licensed and permitted to accept ACBM wastes.

1. Regulatory Requirements: Make all necessary notifications to the appropriate federal,

state, and local agencies.

a. The National Emission Standards for Hazardous Air Pollutants (NESHAP), Asbestos regulation 40 CFR 6 1, Sub-Part M requires that if at least 80 linear meters (260 linear feet) of friable asbestos materials, at least 15 square meters (160 square feet), or 1 cubic meter (35 cubic feet) of friable asbestos materials, or other facility components are stripped or removed while renovating a facility, all the requirements of section 61.147 apply.

b. When applicable, notify the Michigan Department of Natural Resources and Environment (MDNRE), the Michigan Department of Consumer and Industry Services (MDCIS), and appropriate state and local regulatory agencies. No work shall be conducted without notification of all regulatory authorities having jurisdiction.

B. Pre-Abatement Meeting: Prior to the scheduled start of the abatement project, the CONSULTANT will schedule a pre-abatement meeting with the individuals indicated below:

1. CONSULTANT representative.
2. Asbestos Abatement Firm representative.
3. OWNER representative.

C. The meeting agenda will include:

1. Review of the scope of work.
2. Removal methods to be used.
3. Review of CONTRACTOR's initial submittals.
4. A walk-through survey of the site, if appropriate.

2.01 Abatement, General

A. Conduct asbestos abatement operations in a manner that fully protects CONTRACTOR's and SUBCONTRACTOR's employees, the general public, and building occupants from exposure to asbestos and other safety and health hazards.

1. Asbestos abatement projects shall be directly supervised by a competent person as described in 29 CFR 1926.1101.

2. The supervisor/competent person must complete responsibility checklists throughout all phases of the project.

B. Protect adjacent areas, materials and surfaces from damage due to demolition operations, including but not necessarily limited to the following:

1. Water damage.
2. Dirt dust and debris.
3. Abrasion.
4. Cuts and scratches.
5. Holes from fasteners for temporary barriers.

C. All asbestos work shall be conducted within a regulated area that complies with the following requirements:

1. Post a sufficient number of signs required by 29 CFR 1926.1101 at the asbestos abatement area and at every work area entrance, so that tenants, OWNER's personnel, and other CONTRACTOR's employees have an opportunity to take protective measures before exposing themselves to asbestos. Place banners if necessary to secure open

areas. Include information on signs indicating location and quantity of asbestos-containing material.

2. Allow only authorized, properly protected personnel to enter the regulated area. Immediately report unauthorized individuals entering the work area to the CONSULTANT.

D. When required, provide employees and inspectors authorized to enter the regulated area with protective work clothing consisting of disposable Dupont "Tyvek" (or equivalent) full body coveralls, head covers, boots, and other necessary safety gear, including a hard hat and eye protection.

E. Provide respiratory protection to employees as required by current OSHA regulations including 29CFR 1910.134 and 1926.1101.

1. Provide asbestos abatement workers with powered air purifying respirators (PAPR) with full facepiece and high efficiency particulate air (HEPA) filters for adequate protection during ACBM removal operations. Respiratory protection may be downgraded if negative exposure assessment indicates that less protection is required.

2. A half-face respirator or PAPR must be worn while tearing down and setting up enclosures, while glovebagging, and during pre-cleaning and post-cleaning work.

3. Do not allow respirators to be pulled away from faces while in the work area.

4. Maintain an extra PAPR unit on site at all times for the duration of the abatement project.

5. Provide full facepiece supplied-air respirators operated in pressure demand mode equipped with air auxiliary and pressure self-contained breathing apparatus or HEPA egress filters if required for measured fiber concentrations.

F. Maintain at the job site and post the following documents:

1. Copy of MDNRE/MDCIA notification.
2. Employee respiratory protection program.
3. Michigan Right-To-Know poster.
4. Material Safety Data Sheet locator.
5. Company standard operating procedure.
6. This Specification Section.
7. Material Safety Data Sheets for products used on job.
8. 29 CFR 1926.1101.
9. 40 CFR, Part 61 (NESHAP).
10. The foreman's or supervisor's Contractor/Supervisor Accreditation Certificate.
11. State of Michigan Accreditation Certificates and medical approval for each worker.

G. Use the following engineering controls and work practices for all asbestos abatement operations, regardless of measured exposure levels:

1. Vacuum cleaners equipped with HEPA filters to collect all asbestos-containing dust and debris.

2. Wet methods to control exposures during asbestos removal and clean-up, except where proven to be infeasible.

3. Prompt clean-up and disposal of asbestos-contaminated wastes and debris in leak-proof containers.

4. Establish a decontamination area, adjacent and connected to the regulated area, if the Project requires the removal of more than 25 linear feet, or 10 square feet of thermal systems insulation or surfacing ACBM.

5. Establish an equipment area adjacent to the regulated area if the Project requires the removal of less than 25 linear feet or 10 square feet of thermal systems insulation or surfacing ACBM.

H. *Do not* use any of the following equipment or work practices during asbestos abatement operations, regardless of measured exposure levels.

1. High-speed abrasive disc saws not equipped with point-of-cut HEPA ventilation or HEPA filtered exhaust air enclosures.

2. Blowing with compressed air to remove asbestos-containing materials.

3. Dry sweeping, shoveling, or other dry methods to clean up asbestos-containing dust and debris.

4. Employee rotation as a means of reducing employee exposure to asbestos.

2.02 Asbestos Removal by Full Enclosure Method

A. Preparation of the Work Area: Complete the following preparation work prior to beginning asbestos removal operations:

1. Install critical barriers over each opening into the regulated area. The following requirements are in addition to, not in lieu of, other indicated surface and object protection requirements:

a. Seal each opening between the work area and adjacent areas with not less than 2 layers of 4-mil polyethylene sheeting. Use an expanding poly-urethane foam gun to seal areas with large numbers of pipes, conduits and beams. Openings include, but are not necessarily limited to, windows, skylights, doorways, elevator hoistway openings, corridor entrances, drains, ducts, grills, grates, and diffusers.

b. Seal intake and exhaust vents and duct scams within the regulated area with not less than two layers of 6-mil polyethylene sheeting.

2. HVAC System Shutdown: OWNER's maintenance personnel and OWNER's representative will shut down heating, cooling, and air conditioning systems when necessary. Coordinate scheduling with OWNER's personnel and provide 72 hours notice to the OWNER prior to planned shut-down.

3. Protection of Surfaces and Objects: The following requirements are in addition to, not in lieu of, indicated work area sealing requirements. Cover the following surfaces and objects as follows:

a. Protect all surfaces beneath all removal activity. Remove moveable objects from the work area, and cover fixed objects with impermeable dropcloths or plastic sheeting with edges securely sealed with tape.

b. Cover open tanks with plywood or other solid material.

c. Provide clean, fresh air to mechanical equipment, where required to maintain proper

performance of equipment.

d. Fully pre-clean all covered surfaces with amended water and a HEPA vacuum.

e. Cover walls with not less than two layers of 4-mil polyethylene sheeting. Construct free- standing enclosure walls of not less than 6-mil polyethylene sheeting, with supports spaced not more than 3 feet on-center.

f. Cover floors with not less than two layers of 6-mil polyethylene sheeting. Avoid seams where possible. If seams are necessary, overlap not less than 12 inches and tape joints. Extend sheeting 12 inches up the sidewalls leaving no seams at the wall and floor joint. Immediately repair punctures and leaks, and clean up seepage.

4. Cleaning: Do not use cleaning methods that raise dust, such as sweeping or using vacuum cleaners not equipped with HEPA filters. Do not disturb asbestos materials during pre-cleaning phases.

   a. Treat water removed from the enclosure as asbestos contaminated waste. Fully seal floor drains.

5. Deactivate or install ground-fault circuit interrupters on each electrical circuit within the enclosure.

6. Construct a three-chambered decontamination facility that is adjacent to and connected to the regulated area, and that consists of a dirty room, a shower room, and a clean room in series. Construct decontamination facilities that are exposed to weather of lumber and exterior grade plywood. Secure the facility when not in use.

   a. Supply the equipment room with properly labeled, impermeable bags and containers for the containment and disposal of contaminated protective equipment.

   b. Construct showers that comply with the requirements of 29 CFR 1910.141 (d) (3), with the shower room adjacent to both the equipment room and the clean room. Filter water waste and shower water through a 5-micron filter, or remove water from site as asbestos waste.

   c. Equip the clean room with a locker or appropriate storage container for each employee.

7. Employee Decontamination Facilities: Comply with the following requirements:

   a. Access the work area only through an approved decontamination system. Lock or block other entrances. Seal emergency exits (for use during a fire or accident) with polyethylene sheeting and tape.

   b. Seal the waste pass-out, except during the removal of asbestos waste from the enclosure.

   c. Entrance To The Regulated Area: Employees shall enter the decontamination area through the clean room, remove and store clothing, and put on protective clothing and respiratory protection before passing through to the equipment room.

   d. Exit From The Regulated Area: Employees shall exit the regulated area by removing gross contamination and debris from their protective clothing. The clothing shall be removed and disposed of in the equipment room into labeled impermeable bags or containers. Employees shall then shower and enter the clean room before changing

into street clothes.

8. Local Exhaust Ventilation: Maintain portable air filtration units with a HEPA filter in use during asbestos abatement operations requiring enclosures. Units shall conform to OSHA Standard 1926.1101, Appendix F, and shall be designed in accordance with 40 CFR 61, Subpart M Section 61.153.

   a. Exhaust directly to building exterior. Provide a backup portable air filtration unit at each removal enclosure. Start up ventilation units prior to initiating asbestos removal operations and run until the CONSULTANT has approved their shut-down after cleaning, sampling, visual inspection, and tear-down.

   b. Direct air movement within the enclosure away from the employees' work area and toward the air filtration device.

   c. Provide not less than 4 air changes per hour within the enclosure.

   d. Within the enclosure, through the period of its use, maintain a pressure differential of not less than minus 0.02 water gage with respect to ambient conditions outside the enclosure.

9. Visually inspect the enclosure for breeches and smoke-test for leaks before work begins, and before the start of each work shift. Make all modifications to the enclosure prior to starting removal work.

B. Asbestos Removal Operations: Comply with the following requirements for asbestos removal operations:

1. Immediately preceding asbestos removal, apply a fine mist of amended water (water and wetting agent) to the ACBM and the surrounding area. Keep surrounding areas wet by spraying periodically with amended water. Maintain a high humidity environment to assist in fiber settling.

2. Remove asbestos material using two-person teams, on staging platforms, if necessary.

3. Remove the wet asbestos material as intact sections or components. Carefully lower the material to the floor or place directly into container. Never drop or throw asbestos material on the floor.

4. At working heights between 15 and 50 feet above the floor, place removed ACBM in containers at the elevated levels and lower to floor, or place onto inclined chutes or scaffolding for subsequent collection and placement into containers. Clean all debris at the completion of each workday.

5. Once the ACBM is at ground level, pack in labeled 6-mil polyethylene bags, wet and, if appropriate, hold in drums prior to starting the next section.

6. Use two sealed and labeled 6-mil thick bags for storage and transportation of asbestos waste. Standing water shall be in each bag.

7. Wrap large components removed intact in two layers of 6-mil polyethylene sheeting, label, and secure with tape for transport to the landfill. Comply with all wetting requirements.

8. Treat wires, hangers, steel bands, nails, screws, metal lath, tin sheeting, and similar sharp objects removed with asbestos material as asbestos waste. Place in drums for

disposal.

9. Label containerized asbestos waste in accordance with OSHA, EPA, and Department of Transportation regulations, as follows:

   a. Label each container with OSHA label that contains the following information:

      DANGER
      CONTAINS ASBESTOS FIBERS
      AVOID CREATING DUST
      CANCER AND LUNG
      DISEASE HAZARD

   b. Label each container with OWNER's and Asbestos Abatement Firm's names and addresses as required by NESHAP. OWNER's address is 325 Court Street, Sault Ste Marie, Michigan 49783.

   c. Label each container with Class 9 Label required by DOT and identify waste as "RQ, Asbestos NA 2212."

10. Prepare a complete and accurate NESHAP Waste Shipment Record (special manifest). Assure all information required by the U.S. Department of Transportation regulations is included. Under "special handling instructions" provide the required DOT identification information: RQ Asbestos 9, NA 2212, PG III.

    a. Do not remove waste from site until CONSULTANT has signed and verified the shipment record.

11. Remove containerized asbestos waste daily from site, or store on site in a locked or secured location until ready for final disposal. Obtain approval of CONSULTANT for the location of disposal containers. Outdoor waste containers shall be fully enclosed and locked. Mark vehicles used to transport waste during the loading and unloading of asbestos waste with a visible sign, as required by NESHAP.

12. The asbestos waste in each container must be thoroughly wet.

C. Post-Removal Operation Requirements: After completion of asbestos removal and clean-up operations, comply with the following requirements:

   1. The Asbestos Abatement Firm representative, in presence of CONSULTANT, shall inspect the entire work area for asbestos. Include decontamination unit, all plastic sheeting, seals over doorways, windows, and all other openings.

      a. If any suspect asbestos is found, repeat final cleaning operation, until the visual inspection is satisfactory to the CONSULTANT and the Asbestos Abatement Firm. Asbestos not scheduled to be removed as part of the project is exempt.

   2. Encapsulate all walls, floors, ceilings, other exposed surfaces, and decontamination facilities after completing the work area inspection.

      a. Remove the inner polyethylene barrier that is not integral to maintaining negative pressure in the enclosure at this time, and post-abatement air samples will be collected and reviewed by CONSULTANT. Immediately clean any asbestos-containing materials observed behind these secondary barriers.

   3. When post-abatement fiber levels are greater than either 0.01 fiber/cc or background

level, repeat cleanup operation until the area is below either 0.01 fibers/cc or background level.

4. When the post-abatement samples are in compliance, and the CONSULTANT has completed the visual inspection, the enclosure shall be removed.

   a. Turn off HEPA filter exhaust units only after all barriers have been removed.

   b. A final visual inspection will be conducted by the CONSULTANT before the CONTRACTOR is released from the removal site. The final inspection will include tape, polyethylene sheet, debris, and equipment.

2.03 Removal by Negative Pressure Glove Bag Systems

A. Equipment and Materials: Use the following equipment and materials for each glovebag procedure:

1. Glovebags fabricated of 6-mil thick plastic without seams at the bottom.
2. HEPA vacuum system attached to the glovebag and run continuously during operation.
3. Protective suits and respirators.
4. Plastic sheeting.
5. Wetting agent.
6. Encapsulant.

B. Procedures: Comply with the following glovebag method requirements:

1. Wrap loose and friable material adjacent to the removal area in two layers of 6-mil thick plastic, or otherwise render intact.

2. Place plastic sheeting on the floor and equipment beneath each glovebag.

3. Wet-wipe or HEPA vacuum dust and dirt from insulation to be removed.

4. Install glovebags to completely cover the circumference of pipe or other structure where work is to be done.

5. Smoke-test glovebags for leaks. Seal leaks prior to use.

6. Insert and seal equipment that penetrates the bag (spray wands, vacuum nozzles) before insulation is disturbed.

7. Wet the insulation to be removed before, during, and after the removal.

8. Provide only bags capable of withstanding constant wetting and evacuation through a HEPA filtered device.

9. During the performance of glovebag operations removing thermal system insulation, or surfacing materials, employ not less than two persons, working simultaneously, for each task.

10. Wipe insulation residue from the pipe prior to application of an encapsulant.

11. Spray the pipe and glovebag with an encapsulant before the bag is removed from the pipe.

12. Seal exposed insulation ends with a heavy grade mastic.

13. Follow glovebag manufacturer's instructions.

14. Comply with requirements for asbestos waste disposal indicated in 'Removal by Full Enclosure Method' of this Section.

C. Unacceptable Conditions and Procedures: In general, do not use the glovebag method in conditions that prevent safe completion of the removal process. The following procedures are not allowed during glovebag removal:

1. Removing severely damaged insulation.
2. Overloading glovebag.
3. Sliding or moving insulation or glovebag along pipe.
4. Squeezing bags to remove air.
5. Placing glovebags on pipes or other surfaces that exceed 150 degrees Fahrenheit.
6. Using a glovebag more than once.

2.04 Removal by Entire Structures Method

A. The removal of entire structures without disturbing the asbestos is encouraged. An example is removal of asbestos covered pipe fittings by cutting out the entire pipe section scheduled for demolition.

1. Obtain OWNER and CONSULTANT approval of removal by entire structures method prior to starting the project.

B. Required Procedures: Comply with the following requirements applicable to removal of entire structures:

1. Properly wet all asbestos materials before starting procedure. Ensure that material stays adequately wet throughout the entire procedure by continuing application of water as needed.

2. Properly and fully wrap and label the structure before it is moved or cut out.

3. Provide the equipment necessary for asbestos debris cleaning on site during the procedure.

4. Comply with requirements for asbestos waste disposal indicated in "Removal by Enclosure Full Method" of this Section.

2.05 Field Quality Control

A. Pre-Notification of OWNER and CONSULTANT: To permit adequate time to coordinate activities at the project site, notify the CONSULTANT not less than 24 hours prior to planned start of all removal operations, unless otherwise directed by the CONSULTANT.

B. Air Monitoring: The CONSULTANT will collect air samples and oversee the project to insure that compliance with applicable codes, regulations, and ordinances, including 29 CFR 1926. 1101, NESHAP, and Michigan Public Act 135. The CONTRACTOR is required to provide personal air monitoring of its employees to ensure compliance with all regulatory requirements pertaining to worker protection. The CONSULTANT will authorize CONTRACTOR before removal of structure(s).

1. If continuous sampling indicates airborne fiber concentrations above 0.01 fibers/cc or background level, work will be stopped unless otherwise approved by CONSULTANT.

Work may resume when the source of contamination has been corrected and the contamination has been cleaned to the satisfaction of the OWNER and CONSULTANT.

2. Glovebag, entire structures, and full enclosure clearance sampling will be by the aggressive PCM method when feasible. Enclosures must be fully dry before sampling.

C. Inspection: If during the project, the OWNER and/or CONSULTANT determines that work practices either violate applicable rules and regulations or endanger employees, the CONTRACTOR's on-site representative shall stop operations immediately and take corrective action.

2.06 Removal of Non-Friable Asbestos-Containing Materials

A. Removal of Non-Friable Materials, General: For each type of non-friable ACBM indicated, comply with the following requirements:

1. Conduct non-friable ACBM removal operations to prevent the material from becoming friable during the removal and disposal process. No visible emissions are permitted. If the material does not remain substantially intact, comply with the requirements for friable asbestos removal specified herein (except roofing removal).

2. Place impermeable dropcloths on surfaces beneath removal activity.

3. Do not conduct asbestos removal unless the CONSULTANT is present at the site.

4. Labeling Containerized Waste: Comply with the requirements specified herein.

B. Removal of Resilient Flooring Materials:

1. Prior to removal, clean floors of dirt and debris with vacuums equipped with HEPA filter, disposable dust bag, and metal floor tool (brush tools are not permitted). Control odors and fumes with engineering controls.

2. Sanding the floor or related backing is not permitted.

3. Mechanical chipping of vinyl floor tile is prohibited, except when performed in a negative pressure enclosure.

4. Thoroughly wet vinyl floor with amended water. Use a slip scraper or equivalent to loosen the floor tile from the floor. Remove the floor tile in a substantially intact state. Removal of floor tile in a not substantially intact state must be completed within a negative pressure enclosure. Keep the floor tile wet throughout the removal and cleanup. Removal of floor tile using an infrared heat machine eliminates the wetting requirement.

5. Remove vinyl sheet flooring by cutting while wetting the snip-point. Wet sheet flooring during delamination. Rip-up of resilient flooring material is not permitted.

6. Clean resilient flooring of all debris using a HEPA vacuum, wet sweeping, mopping or equivalent and allow time to dry. Dry sweeping is prohibited.

7. Place the resilient flooring material and debris in an asbestos disposal bag. Seal the bag and place it in a properly labeled container. Comply with the disposal and labeling requirements as specified herein.

C. Mastic Removal:

1. Clean the floor of all debris using a HEPA vacuum, wet sweeping, mopping or equivalent.

2. Remove all mastic utilizing chemical or "bead-blasting" methods. Bead-blasting must be completed within a negative pressure enclosure. When feasible, select low odor products for chemical mastic removal. Conduct chemical mastic removal and post-work cleaning of the residual chemical according to manufacturer's instructions.

3. Perform scraping of residual adhesive and backing using wet methods. After all debris is removed, thoroughly mop the floor and allow time to dry.

4. Properly dispose of all asbestos mastic waste according to all applicable regulations, and comply with the disposal and labeling requirements specified herein.

D. Other Non-Friable ACBM: Remove non-friable ACBM using the following technique:

1. Cutting, abrading, or breaking material is not permitted.

2. Wet material with amended water prior to removal.

3. Carefully disassemble material such a manner as to prevent breakage.

4. Wrap and seal material in two layers 6-mil thick polyethylene, asbestos disposal bags, or equivalent packages and properly label them with appropriate asbestos warning signs as indicated in the "Removal of Non-Friable Materials, General" section of this Specification.

5. Immediately lower to the ground unwrapped or unbagged materials via covered, dust-tight chute, crane, or hoist; or place in an impervious waste bag or wrap in plastic sheet and lower to the ground no later than the end of the work shift.

6. Clean the floor of all debris using a HEPA vacuum, wet sweeping, mopping or equivalent and allow time to dry.

7. Dispose of asbestos waste in accordance requirements of this Section.

END OF SECTION

Designation	Material Description	Estimated Quantity (Total)*
	ACM Linoleum	805 sq. ft.
	9" x 9" Vinyl Asbestos Tile	4,275 sq. ft.
	Window Glazing	11 Window Systems
	Suspected Thermal Systems Insulation	225 Lft.

* The estimated quantities are based on building materials scheduled for abatement. The abatement quantities are for reference only. The proposed abatement cost should include all labor and materials necessary for project completion.

Hazardous Materials Notes:

1. All window glazing is considered asbestos containing.
2. All fire doors are considered asbestos containing.
3. All Thermal Systems Insulation (TSI) is considered asbestos
4. TSI is assumed present in wall cavities.
5. All 9" x 9" tile is considered asbestos containing.
6. All mastic tested negative for asbestos.
7. Blue paint is considered lead containing paint.

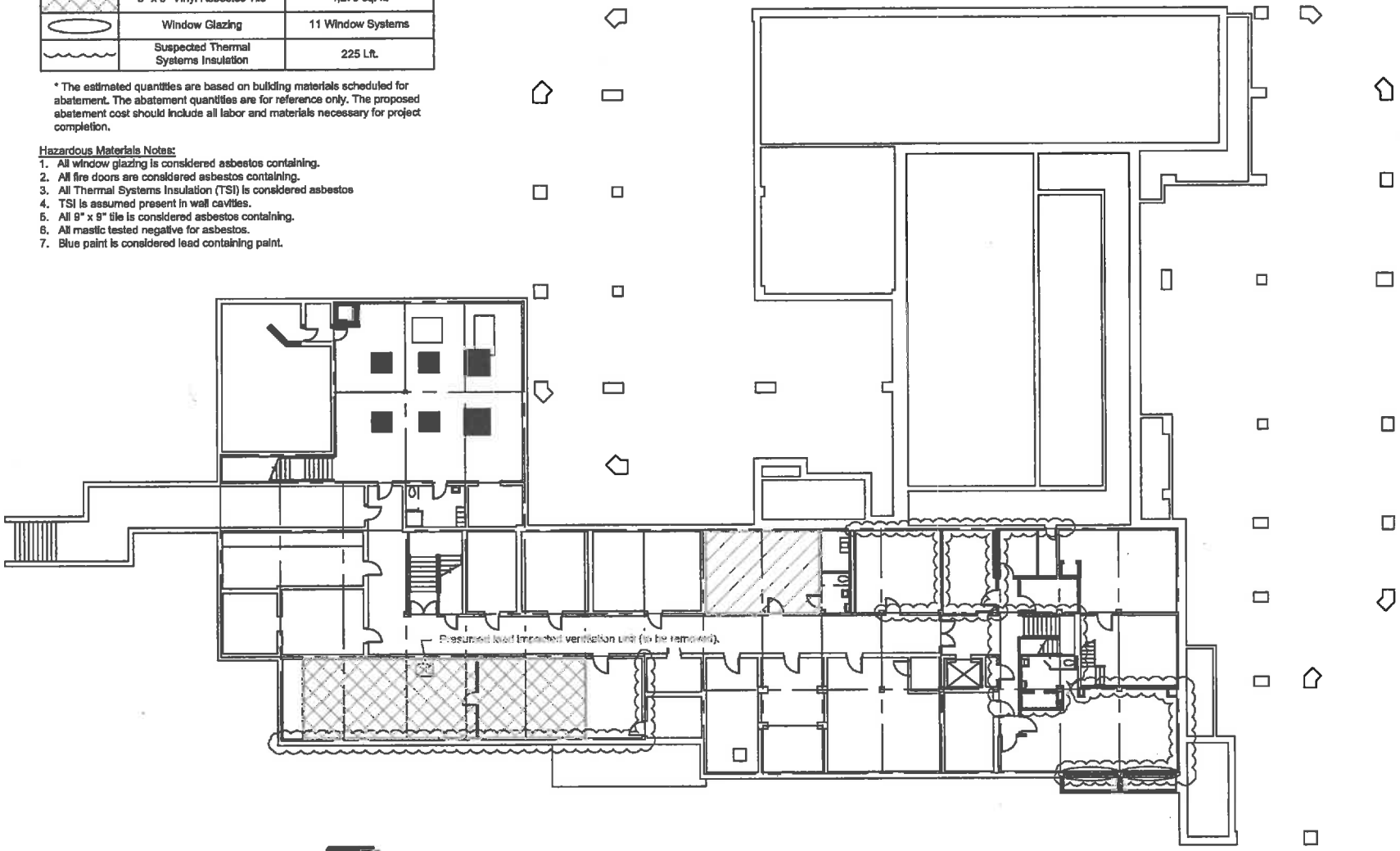

GRAPHIC SCALE: 1 inch = 20 feet

0 10 20 40 60

TriMedia Environmental & Engineering

Gundlach Champion
Chippewa County Bldg Hazardous Materials Assessment
Sault Ste. Marie, MI

DATE	DESCRIPTION	REVISED
1-Apr-11	04/11/07 Revisions	

DESIGNED:
DRAWN: JWM
CHECKED: KTV
APPROVED: TLA

TRIMEDIA JOB NUMBER: 2011-044

SHEET TITLE: Basement Hazardous Materials Plan

SHEET NUMBER: 1.0

Designation	Material Description	Estimated Quantity (Total)*
	ACM Linoleum	805 sq. ft.
	9" x 9" Vinyl Asbestos Tile	4,275 sq. ft.
	Window Glazing	11 Window Systems
	Suspected Thermal Systems Insulation	225 Lft.

* The estimated quantities are based on building materials scheduled for abatement. The abatement quantities are for reference only. The proposed abatement cost should include all labor and materials necessary for project completion.

Hazardous Materials Notes:

1. All window glazing is considered asbestos containing.
2. All fire doors are considered asbestos containing.
3. All Thermal Systems Insulation (TSI) is considered asbestos
4. TSI is assumed present in wall cavities.
5. All 9" x 9" tile is considered asbestos containing.
6. All mastic tested negative for asbestos.
7. Blue paint is considered lead containing paint.

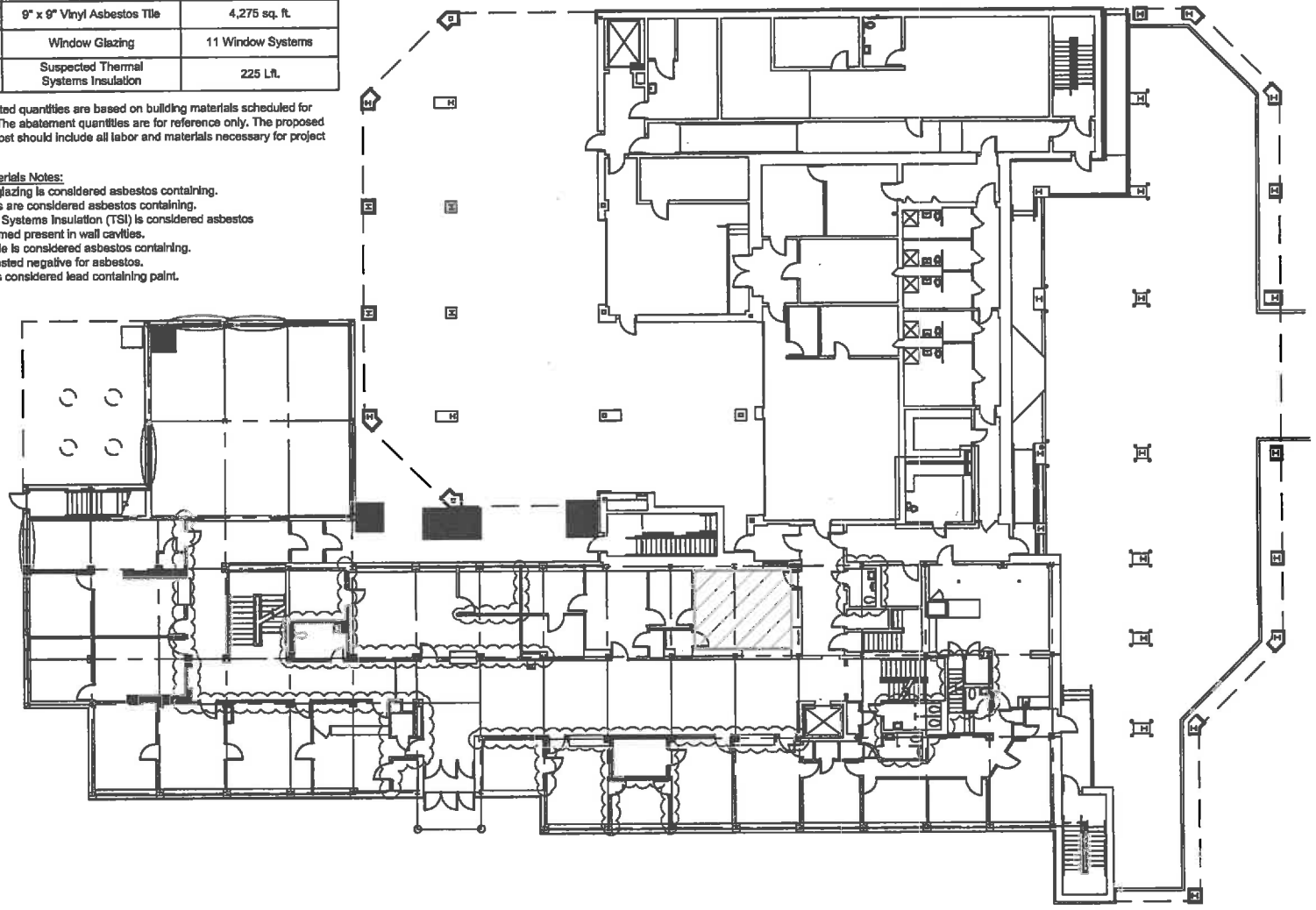

GRAPHIC SCALE: 1 inch = 20 feet

0 10 20 40 60

TriMedia Environmental & Engineering

Gundlach Champion
Chippewa County Bldg Hazardous Materials Assessment
Sault Ste. Marie, MI

DATE	DESCRIPTION	ISSUED
	INITIAL ASSESSMENT	

DESIGNED:
DRAWN: JWM
CHECKED: KTV
APPROVED: TLA

TRIMEDIA JOB NUMBER: 2011-044

SHEET TITLE: First Floor Hazardous Materials Plan

SHEET NUMBER: 2.0

Designation	Material Description	Estimated Quantity (Total)*
	ACM Linoleum	805 sq. ft.
	9" x 9" Vinyl Asbestos Tile	4,275 sq. ft.
	Window Glazing	11 Window Systems
	Suspected Thermal Systems Insulation	225 Lft.

* The estimated quantities are based on building materials scheduled for abatement. The abatement quantities are for reference only. The proposed abatement cost should include all labor and materials necessary for project completion.

Hazardous Materials Notes:

1. All window glazing is considered asbestos containing.
2. All fire doors are considered asbestos containing.
3. All Thermal Systems Insulation (TSI) is considered asbestos
4. TSI is assumed present in wall cavities.
5. All 9" x 9" tile is considered asbestos containing.
6. All mastic tested negative for asbestos.
7. Blue paint is considered lead containing paint.

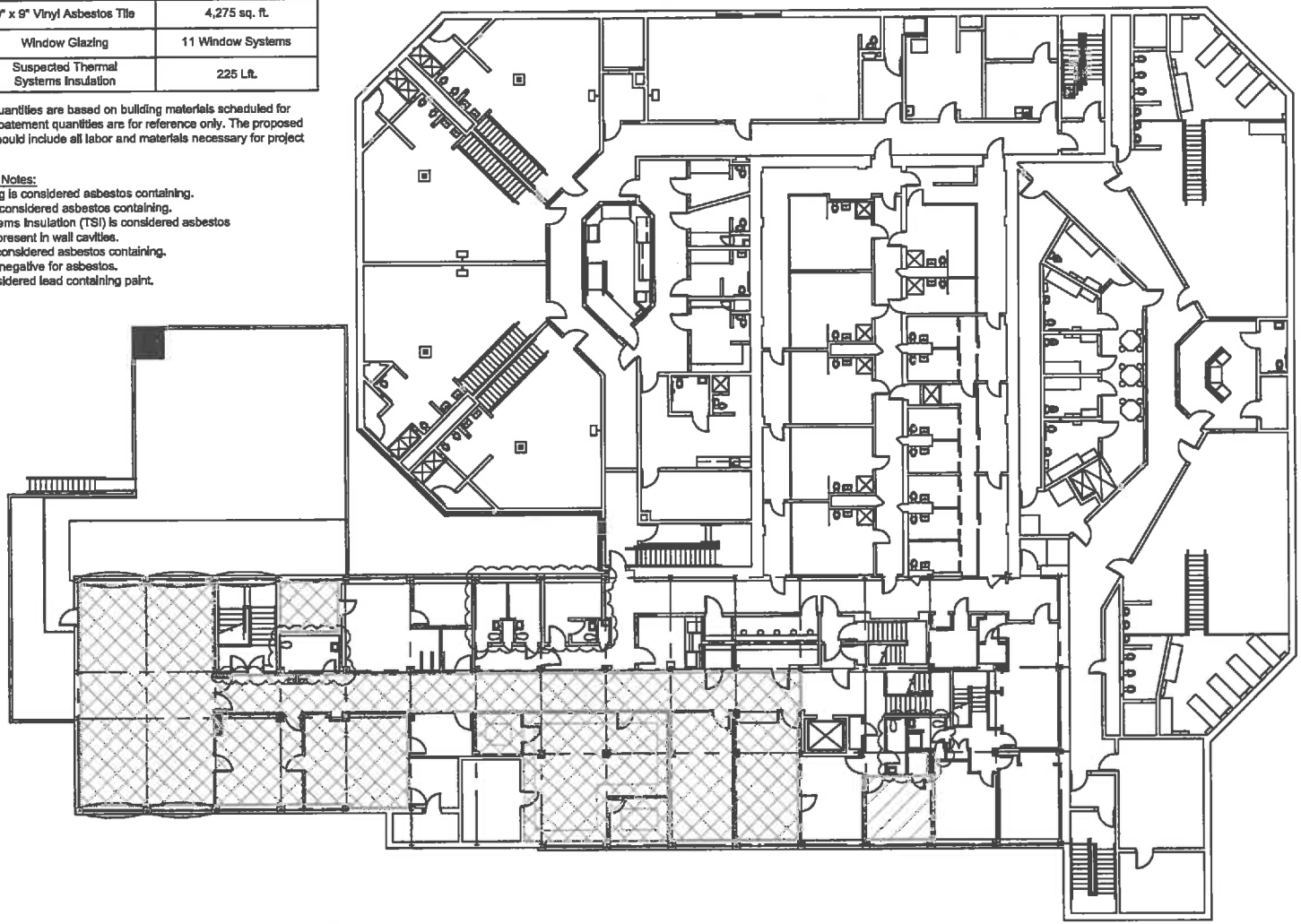

GRAPHIC SCALE: 1 inch = 20 feet

0 10 20 40 60

TriMedia Environmental & Engineering

Gundlach Champion
Chippewa County Bldg Hazardous Materials Assessment
Sault Ste. Marie, MI

DATE	DESCRIPTION	ISSUED
2-8-11	REPORT ISSUE	

DESIGNED:
DRAWN: JWM
CHECKED: KTV
APPROVED: TLA

TRIMEDIA JOB NUMBER: 2011-044

SHEET TITLE: Second Floor Hazardous Materials Plan

SHEET NUMBER: 3.0

Asbestos Notes:
1. The roof has been replaced with new non-asbestos containing materials. If older roof materials or suspect materials are uncovered, the Contractor shall stop work and notify the Consultant for asbestos Sampling.

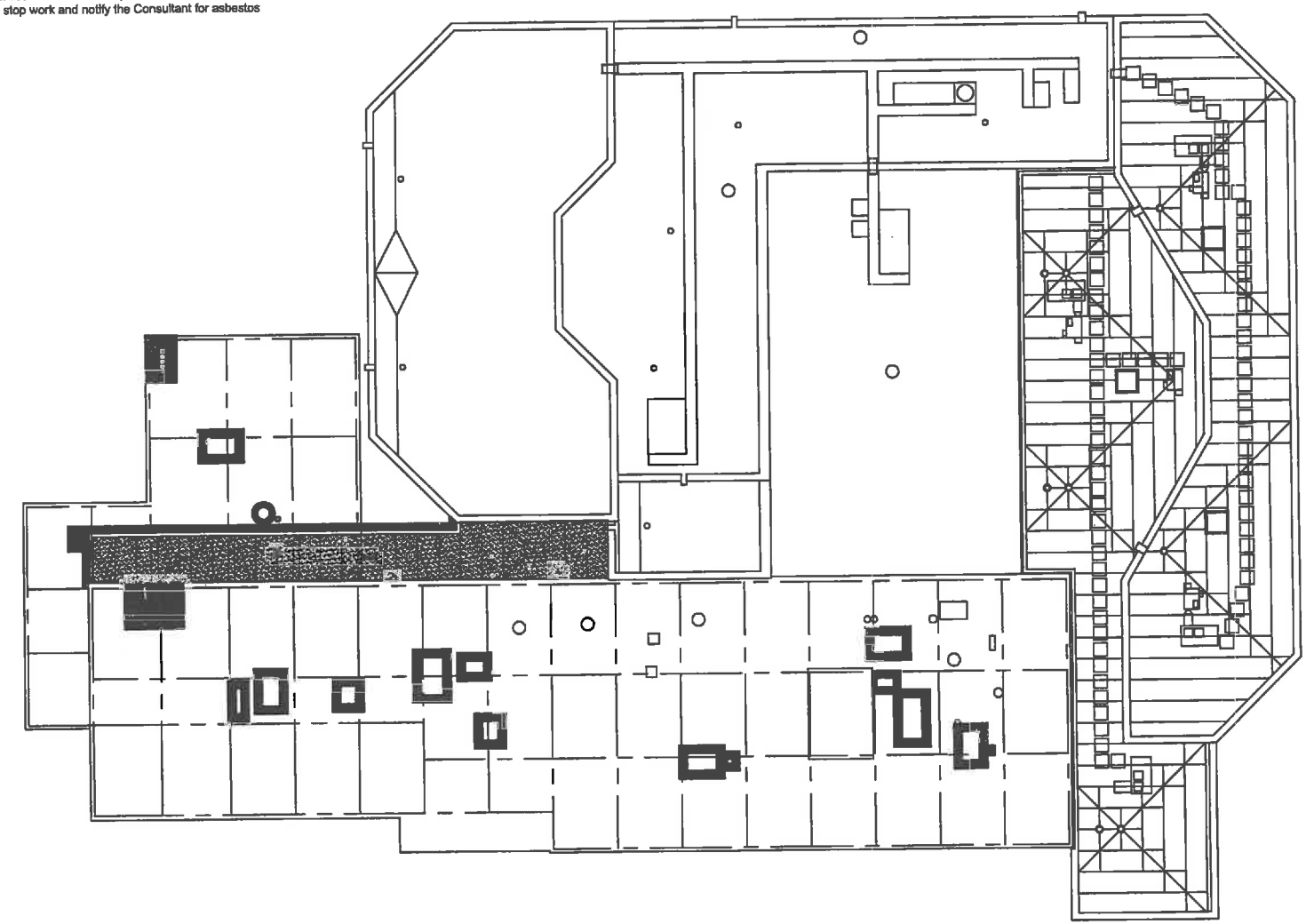

GRAPHIC SCALE: 1 inch = 20 feet
0 10 20 40 60

TriMedia Environmental & Engineering

Gundlach Champion
Chippewa County Bldg Hazardous Materials Assessment
Sault Ste. Marie, MI

REV. NO.	DATE	DESCRIPTION	ISSUED
		HAZMAT Assessment	

DESIGNED:
DRAWN: JWM
CHECKED: KTV
APPROVED: TLA

TRIMEDIA JOB NUMBER: 2011-044

SHEET TITLE:
Roof Hazardous Materials Plan

SHEET NUMBER:
4.0

BID PACKAGE 06000
GENERAL TRADES

The work of this Bid Package includes the provisions of all labor, material and equipment necessary to furnish, deliver, unload, store, protect and install the General Trades work, as well as items listed below, as shown on the drawings and specified in the Project Manual Sections:

Division 1	General Requirements
02070	Selective Demolition
Division 3	Concrete
Division 4	Masonry
Division 5	Metals
Division 6	Wood and Plastics
07200	Insulation
07250	Spray Applied Insulation
07900	Joint Sealers
Division 8	Doors and Windows
Division 10	Specialties
11132	Projection Screen
11190	Detention Doors, Windows and Hardware
11195	Detention Equipment
12567	Courtroom Bench Seating
13070	Bullet Resistant Protection

and other specifications interfacing with this work.

All references made to the CONTRACTOR in the Technical Specifications shall be interpreted as the SUBCONTRACTOR performing that section of work.

The scope of work is to include, but is not limited to, the following items:

1. All removal and proper disposal of demolition items as identified on the Building Demolition Plans. An allowance of $10,000 will be allocated for dumpsters for demolition materials and construction debris.

2. Provide temporary weather-tight closure of exterior openings and install interior partitions to accommodate acceptable working conditions and protection for products, safety to the public and to allow for temporary heating, and to prevent entry of unauthorized persons. An allowance of $20,000 will be allocated for Temporary Enclosures and Partitions

3. Saw cut, remove and replace concrete slabs to accommodate new plumbing. Coordinate with the Plumbing Contractor.

4. All structural concrete and reinforcing steel work complete.

5. All masonry work complete.

6. All structural metal framing, steel decking, and metal fabrications complete.

7. All expansion joint cover assemblies.

8. All interior and exterior wood blocking, including but not limited to, roof blocking.

9. All raised floor areas in courtroom.

10. All architectural woodwork.

11. All concealed blocking for architectural woodwork, doors and windows, specialties, and projection screens.

12. All spray foam insulation at underside of walkway.

13. All fireproofing of structural steel and metal decking.

14. All metal soffits and framing.

15. All sealants and caulking associated with the work installed by this Bid Package, including security caulk at inmate areas.

16. All hollow metal doors, wood doors, door and window frames and hardware.

17. All overhead coiling fire rated doors.

18. All installation of access panels.

19. All security grade service windows, glass, and glazing.

20. All security frames, doors hardware and glass at secure corridor. Coordinate wiring requirements with Division 16 contractor.

21. All steel floor mounted benches (11195 – Detention Equipment) in Court Holding – Room 313.

22. All aluminum frames, doors and windows.

23. All interior glass and glazing, including mirrors.

24. All markerboards, display cabinets, toilet and shower partitions, signage, metal lockers, fire extinguishers and cabinets, toilet and shower accessories, and hat and coat racks.

25. All courtroom bench seating.

Excluded from this Subcontractor's work is:

1. Membrane roofing over coal storage (by 07500 Membrane Roofing Subcontractor).

2. EIFS and Gypsum Board Systems (by 09200 EIFS and Drywall Subcontractor).

3. Furnish of access panels (by other Subcontractors).

Special Considerations:

1. Review coordination requirements as specified in the General Requirements Section 01040 – Coordination.

2. Each bidder shall include in their bids all costs associated with safety devices, practices and standards required or recommended by governmental and quasi-governmental authorities having jurisdiction and by the Design Builder and Owner, including but not limited to, requirements imposed by the Subcontract Documents.

3. Review the Project Manual in its entirety as it contains provisions equally applicable to the successful bidder and his sub-subcontractors. Pay special attention to the Construction Schedule and coordinate all labor, material and equipment necessary to furnish and install items required by this Bid Package to ensure project completion at or prior to the Substantial Completion Date.

4. By submitting a bid pursuant to the information contained in this package, you accept the Subcontract Agreement Form CONSENSUSDOCS 751 and all of its terms. Reference the Project Manual, Section E.

5. Provide layout for own work.

6. Provide hoisting for own work.

7. Receive, inventory and properly store all materials and accessories associated with this Bid Package. Pay special attention to transportation, handling, storage and protection requirements as specified in Section 01600 – Materials and Equipment of the General Requirements.

End of Bid Package 06000

BID PACKAGE 07500
MEMBRANE ROOFING

The work of this Bid Package includes the provisions of all labor, material and equipment necessary to furnish, deliver, unload, store, protect and install the membrane roofing, sheet metal flashing and trim, as well as items listed below, as shown on the drawings and specified in the Project Manual Sections:

Division 1	General Requirements
05800	Expansion Control
07500	Membrane Roofing
07900	Joint Sealers

and other specifications interfacing with this work.

All references made to the CONTRACTOR in the Technical Specifications shall be interpreted as the SUBCONTRACTOR performing that section of work.

The scope of work is to include, but is not limited to, the following items:

1. All membrane roofing, insulation, flashing and trim for a complete roof system at the connecting corridor and coal storage room.
2. All roofing work associated with relocating roof drains at boiler room.
3. Patching of boiler room roof where chimney is removed.
4. All sheet metal work shown or required in connection with roof flashing, scuppers, reglets, coping, counter-flashing, mastic, expansion joints, etc. Flash all new construction into existing roof.
5. All roof pavers as indicated.
6. All expansion joint assemblies at the roof.
7. Provide weather-tight installation of all new roof penetrations and seal up all penetrations no longer used.
8. Provide all weather striping and joint sealants for a complete installation.
9. Installation of the rooftop unit curbs and vent pipe flashing for mechanical equipment.
10. All sealants and caulking associated with this Bid Package to complete the installation.

Excluded from this Subcontractor's work is:

1. Structural roof deck and support (by 06000 – General Trades Subcontractor).
2. Roof wood nailers (by 06000 – General Trades Subcontractor).
3. Furnishing of rooftop unit curbs and vent pipe flashing, (by 15000 – HVAC & Plumbing Subcontractor).
4. Installation of roof drains (by 15000 – HVAC & Plumbing Subcontractor).

Special Considerations:

1. Maintain warranty on existing roof system.

2. Review coordination requirements as specified in the General Requirements Section 01040 – Coordination.

3. Each bidder shall include in their bids all costs associated with safety devices, practices and standards required or recommended by governmental and quasi-governmental authorities having jurisdiction and by the Construction Manager and Owner, including but not limited to, requirements imposed by the Contract Documents.

4. Review the Project Manual in its entirety as it contains provisions equally applicable to the successful bidder and his sub-subcontractors. Pay special attention to the Construction Schedule and coordinate all labor, material and equipment necessary to furnish and install items required by this Bid Package to ensure project completion at or prior to the Substantial Completion Date.

5. By submitting a bid pursuant to the information contained in this package, you accept the Subcontract Agreement Form CONSENSUSDOCS 751 and all of its terms. Reference the Project Manual, Section E.

6. Coordinate installation of roof penetrations with Bid Package 06000, 15000, and 16000 Subcontractors as necessary.

7. Provide layout for own work.

8. Provide hoisting for own work.

9. Receive, inventory and properly store all materials and accessories associated with this Bid Package. Pay special attention to transportation, handling, storage and protection requirements as specified in Section 01600 – Materials and Equipment of the General Requirements.

End of Bid Package 07500

BID PACKAGE 09200
EIFS & DRYWALL

The work of this Bid Package includes the provisions of all labor, material and equipment necessary to furnish, deliver, unload, store, protect and install the EFIS and Drywall work, as well as items listed below, as shown on the drawings and specified in the Project Manual Sections:

Division 1	General Requirements
07200	Insulation
07240	Exterior Insulation and Finish System
07900	Joint Sealers
09250	Gypsum Board Systems

and other specifications interfacing with this work.

All references made to the CONTRACTOR in the Technical Specifications shall be interpreted as the SUBCONTRACTOR performing that section of work.

The scope of work is to include, but is not limited to, the following items:

1. All Extruded Insulation Finish Systems (EIFS) complete.
2. All flashing required at EIFS system.
3. All new metal furring, wall framing, batt insulation and drywall complete.
4. All new framing and drywall to infill recessed areas where radiators are removed.
5. All sound batt insulation as required.
6. All internal metal reinforcing at walls for Owner furnishings.
7. All bullet protection board.
8. All hanging, taping and finishing of drywall walls, ceilings and bulkheads.
9. Broom clean all rooms after drywall sanding is complete. Utilize dust control materials compatible with subsequent flooring.
10. All sealants and caulking associated with the work installed by this Bid Package, including security caulk at inmate areas.

Excluded from this Subcontractor's work is:

1. None.

Special Considerations:

1. Review coordination requirements as specified in the General Requirements Section 01040 – Coordination.
2. Each bidder shall include in their bids all costs associated with safety devices, practices and standards required or recommended by governmental and quasi-governmental authorities having jurisdiction and by the Design Builder and Owner, including but not limited to, requirements imposed by the Contract Documents.

3. Review the Project Manual in its entirety as it contains provisions equally applicable to the successful bidder and his sub-subcontractors. Pay special attention to the Construction Schedule and coordinate all labor, material and equipment necessary to furnish and install items required by this Bid Package to ensure project completion at or prior to the Substantial Completion Date.

4. By submitting a bid pursuant to the information contained in this package, you accept the Subcontract Agreement Form CONSENSUSDOCS 751 and all of its terms. Reference the Project Manual, Section E.

5. Provide layout for own work.

6. Provide hoisting for own work.

7. Receive, inventory and properly store all materials and accessories associated with this Bid Package. Pay special attention to transportation, handling, storage and protection requirements as specified in Section 01600 – Materials and Equipment of the General Requirements.

End of Bid Package 09200

BID PACKAGE 09500
ACOUSTICAL CEILINGS

The work of this Bid Package includes the provisions of all labor, material and equipment necessary to furnish, deliver, unload, store, protect and install the Acoustical Ceilings as well as items listed below, as shown on the drawings and specified in the Project Manual Sections:

Division 1	General Requirements
07900	Joint Sealers
09500	Acoustical Treatment

and other specifications interfacing with this work.

All references made to the CONTRACTOR in the Technical Specifications shall be interpreted as the SUBCONTRACTOR performing that section of work.

The scope of work is to include, but is not limited to, the following items:

1. All acoustical ceilings, suspension systems, framing and miscellaneous carpentry for a complete ceiling system.

2. All flexible expansion joint assemblies at acoustical ceilings.

3. All joint sealants associated with this Bid Package.

Excluded from this Subcontractor's work is:

1. Gypsum board ceilings (by 09200 EIFS and Drywall Subcontractor)

Special Considerations:

1. Review coordination requirements as specified in the General Requirements Section 01040 – Coordination.

2. Each bidder shall include in their bids all costs associated with safety devices, practices and standards required or recommended by governmental and quasi-governmental authorities having jurisdiction and by the Construction Manager and Owner, including but not limited to, requirements imposed by the Contract Documents.

3. Review the Project Manual Part in its entirety as it contains provisions equally applicable to the successful bidder and his sub-subcontractors. Pay special attention to the Construction Schedule and coordinate all labor, material and equipment necessary to furnish and install items required by this Bid Package to ensure project completion at or prior to the Substantial Completion Date.

4. By submitting a bid pursuant to the information contained in this package, you accept the Subcontract Agreement Form CONSENSUSDOCS 751 and all of its terms. Reference the Project Manual, Section E.

5. Provide layout for own work.

6. Provide hoisting for own work.

7. Receive, inventory and properly store all materials and accessories associated with this Bid Package. Pay special attention to transportation, handling, storage and protection requirements as specified in Section 01600 – Materials and Equipment of the General Requirements.

End of Bid Package 09500

BID PACKAGE 09600
FLOORING

The work of this Bid Package includes the provisions of all labor, material and equipment necessary to furnish, deliver, unload, store, protect, and install Flooring and items listed below, as shown on the drawings and specified in the Project Manual Sections:

Division 1	General Requirements
07900	Joint Sealers
09300	Tile
09650	Resilient Flooring and Accessories
09680	Carpet

and other specifications interfacing with this work.

All references made to the CONTRACTOR in the Project Manual shall be interpreted as the SUBCONTRACTOR performing that section of work.

The scope of work is to include, but is not limited to, the following items:

1. All resilient flooring tile & base, and security caulk as required.
2. All carpet & base.
3. All ceramic tile.
4. All grouting of tile.
5. All leveling and patching of floors to receive new flooring. Including but not limited to floor filler at Open office 274, Office 275, Office 279 and Office 280.
6. All protection of new flooring throughout all construction activities.
7. All reducer strips, metal divider strips, thresholds and other transitions as necessary.
8. Vacuum carpets, clean tile, and wax resilient flooring per manufacturers' instructions once installation is complete.
9. All caulking and sealants associated with this Bid Package to complete the installation, including but not limited to security caulk at flooring wall interface as indicated.

Excluded from this Subcontractors work is:

1. Concrete sealer (by 06000 – General Trades Subcontractor).

Special Considerations:

1. Review coordination requirements as specified in the General Requirements Section 01040 – Coordination.
2. Each bidder shall include in their bids all costs associated with safety devices, practices and standards required or recommended by governmental and quasi-governmental authorities having jurisdiction and by the Design-Builder and Owner, including but not limited to, requirements imposed by the Contract Documents.

3. Review the Project Manual in its entirety as it contains provisions equally applicable to the successful bidder and his sub-subcontractors. Pay special attention to the Construction Schedule and coordinate all labor, material and equipment necessary to furnish and install items required by this Bid Package to ensure project completion at or prior to the Substantial Completion Date.

4. By submitting a bid pursuant to the information contained in this package, you accept the Subcontract Agreement Form CONSENSUSDOCS 751 and all of its terms. Reference the Project Manual, Section E.

5. Provide layout for own work.

6. Provide hoisting for own work.

7. Receive, inventory and properly store all materials and accessories associated with this Bid Package. Pay special attention to transportation, handling, storage and protection requirements as specified in Section 01600 – Materials and Equipment of the General Requirements.

END OF BID PACKAGE 09600

BID PACKAGE 09900
PAINTING

The work of this Bid Package includes the provisions of all labor, material and equipment necessary to furnish, deliver, unload, store, protect, and install Painting and items listed below, and as shown on the drawings and specified in the Project Manual Sections:

Division 1	General Requirements
07900	Joint Sealers
09900	Painting
09955	Wallcoverings

and other specifications interfacing with this work.

All references made to the CONTRACTOR in the Technical Specifications shall be interpreted as the SUBCONTRACTOR performing that section of work.

The scope of work is to include, but is not limited to, the following items:

1. All field surface preparation, painting and finishing of exposed interior and exterior items and surfaces.

2. All field painting of shop primed metal items including, but not limited to, steel stairs, handrails, metal doors, door and windows frames, and other metal fabrications. Verify materials that are pre-finished and those that are shop primed. Coordinate finishing.

3. In all "finished spaces", field surface preparation and painting of exposed bare and covered pipes and ducts, hangers, exposed steel and primed metal surfaces of mechanical and electrical equipment. Any required color coding for piping, etc. is the work of the respective Division 15 and 16 subcontractors.

4. All acoustic wallcoverings.

5. Protection for floors and surfaces not receiving paint.

6. Remove all unused material from site.

7. All block filler as specified for uniform finish.

8. Caulking of dissimilar materials that are to receive a field painted or field finish coating by this Bid Package. Specific areas of caulking may be excluded under this Bid Package that are identified as such under the "Excluded from this Subcontractors work" section.

Excluded from this Subcontractors work is:

1. Concrete floor sealer.

2. Caulking of hollow metal and aluminum door and window frames.

3. Painting pre-finished items, finished metal surfaces, concealed surfaces, operating parts and labels. Factory pre-finished items including: wood doors, acoustical materials, architectural woodwork and casework, finished mechanical and electrical equipment, light fixtures, switch gear and distribution cabinets.

4. All caulking of concrete masonry control or expansion joints, and interior corners. Includes all firestopping required at masonry walls to obtain proper fire rating, (by Bid Package 06000).

Special Considerations:

1. Review coordination requirements as specified in the General Requirements Section 01040 – Coordination.

2. Each bidder shall include in their bids all costs associated with safety devices, practices and standards required or recommended by governmental and quasi-governmental authorities having jurisdiction and by the Design-Builder and Owner, including but not limited to, requirements imposed by the Contract Documents.

3. Review the Project Manual in its entirety as it contains provisions equally applicable to the successful bidder and his sub-subcontractors. Pay special attention to the Construction Schedule and coordinate all labor, material and equipment necessary to furnish and install items required by this Bid Package to ensure project completion at or prior to the Substantial Completion Date.

4. By submitting a bid pursuant to the information contained in this package, you accept the Subcontract Agreement Form CONSENSUSDOCS 751 and all of its terms. Reference the Project Manual, Section E.

5. Provide layout for own work.

6. Provide hoisting for own work.

7. Receive, inventory and properly store all materials and accessories associated with this Bid Package. Pay special attention to transportation, handling, storage and protection requirements as specified in Section 01600 – Materials and Equipment of the General Requirements.

8. Verify that surfaces scheduled to be finished are ready to receive work and report any condition that may potentially affect proper application.

END OF BID PACKAGE 09900

BID PACKAGE 15000
HVAC & PLUMBING

The work of this Bid Package includes the provisions of all labor, material and equipment necessary to furnish, deliver, unload, store, protect, and install all HVAC and Plumbing items listed below, and as shown on the drawings and specified in the Technical Specifications:

Division 1	General Requirements
07900	Joint Sealers
Division 22	Plumbing Systems
Division 23	HVAC Systems

and other specifications interfacing with this work.

All references made to the CONTRACTOR in the Technical Specifications shall be interpreted as the SUBCONTRACTOR performing that section of work. All references made to the ENGINEER OR ARCHITECT in the Technical Specifications shall be interpreted as the Design-Builder or Architect/Engineer as determined by the Design-Builder.

The scope of work is to include, but is not limited to, the following items:

1. Temporary heating. Reference the Project Manual, Section G, Section 01500 – Construction Facilities and Temporary Controls for additional clarifications regarding these items.

2. All mechanical and plumbing demolition, removal and proper disposal. Patch holes left by demolition to match adjacent materials.

3. All HVAC and mechanical systems complete.

4. All plumbing systems and fixtures complete.

5. Testing, adjusting and balancing.

6. Furnishing and layout of all required access panels through finished ceilings and walls. Installation of access panels are by others.

7. All required controls, wiring and related work as necessary to provide a complete HVAC system.

8. All hoisting, setting and installation of equipment/materials to be installed under this Bid Package.

9. Furnishing of rooftop unit curbs and vent pipe flashing for mechanical equipment. Installation of the rooftop unit curbs and vent pipe flashing are by Bid package 07500 – Membrane Roofing Subcontractor.

10. All insulation necessary for HVAC and plumbing.

11. All cutting and patching required to install the work of this Bid Package. Cut/form all holes for penetrations to permit proper sealing.

12. All firestopping of penetrations to obtain proper fire rating.

13. Provide caulking and sealing of conduit, piping, ductwork, equipment and all other items associated with this Bid Package to complete the installation.

14. All pipe installed shall be thoroughly cleaned of all grease, dirt, rust and scale.

15. All electric motors and starters for all equipment that is furnished and installed as part of this Bid Package.

16. All miscellaneous structural steel required for the purpose of fabricating pipe supports, pipe guides, pipe anchors, equipment supports, and framing for large ducts and plenums. All steel used for these purposes shall be new, clean, straight and prime painted.

17. All identification and labeling of pipes, valves and equipment.

18. All new filters for mechanical equipment as required during start-up and operation and final acceptance by the Contractor. A new set will be installed at the direction of the Construction Manager just before Owner acceptance. Reference the Project Manual, Section G, Section 01650 – Starting of Systems and Section 01700 – Contract Closeout.

19. All repairs and replacement of leaks, damages, or defects discovered or resulting from tests and/or use of work installed by this Bid Package. This Subcontractor shall make the necessary repairs and replacements to a like new condition. Leaky pipe joints, ducts, etc. shall be removed and replaced with acceptable materials.

20. All systems must be supported independently. Sheet metal ducts are not to be supported from other trade's installations, such as sprinkler piping, conduit, etc.

21. All vibration isolation requirements specified for the AHU's, fans, mechanical rotating equipment, and associated piping ducts, and equipment as specified or recommended by the manufacturer.

22. All layout, alignment and installation of all sleeves and/or embeds required for this scope of work to be coordinated with concrete re-steel placement.

23. All work must meet all applicable State of Michigan and local codes and conditions, (AHJ's).

24. All necessary permits and inspection fees from authorities having jurisdiction (AHJs) to complete the work of this Bid Package.

Excluded from this Subcontractor's work is:

1. Concrete equipment pads, (by Bid Package 06000).

2. Installation of the rooftop unit curbs and vent pipe flashing, (by Bid Package 07500).

3. Installation of access panels in finished ceilings and walls, (by Bid Package 06000).

Special Considerations:

1. Coordinate floor drain and water line installation with Bid Package 06000.

2. Coordinate with the Bid Package 06000 all masonry penetrations.

3. Coordinate with Bid Package 06000, and 07500 for installation of louvers and vent pipe flashing.

4. Coordinate with the Bid Package 16000 Subcontractor for final locations of supply, return, exhaust and outside air devices.

8. Coordinate work with the Bid Package 16000 Subcontractor for rough-in compatibility.

9. Coordinate and locate all equipment housekeeping pads for installation by Bid Package 06000 Subcontractor.

10. Coordinate all holes for penetrations by this Bid Package with the Subcontractor in whose work the piping penetrates. Coordinate installation of access panels.

11. Coordinate the electrical characteristics for all the electric motors furnished and installed as part of this Bid Package with the Bid Package 16000 Subcontractor, who will provide power to the motors, in order to assure proper operation of all equipment.

12. Review the access requirements for all major pieces of equipment and coordinate their delivery dates with the Design-Builder so they can be reflected in the construction schedule. Identify to the Design-Builder any major piece of equipment that will require special handling, special access considerations, before or after hours delivery, or storage at the site. This Subcontractor has the total responsibility for the complete installation of this equipment.

13. Review the Project Manual in its entirety as it contains provisions equally applicable to the successful bidder and his sub-subcontractors. Pay special attention to the Construction Schedule and coordinate all labor, material and equipment necessary to furnish and install items required by this Bid Package to ensure project completion at or prior to the Substantial Completion Date.

END OF BID PACKAGE 15000

BID PACKAGE 16000
ELECTRICAL

The work of this Bid Package includes the provisions of all labor, material and equipment necessary to furnish, deliver, unload, store, protect, and install all Electrical items listed below, as shown on the drawings and specified in the Technical Specifications:

Division 1	General Requirements
07900	Joint Sealers
08700	Door Hardware (for reference)
11190	Detention Doors, Windows, and Hardware (for reference)
Division 26	Electrical

and other specifications interfacing with this work.

All references made to the CONTRACTOR in the Technical Specifications shall be interpreted as the SUBCONTRACTOR performing that section of work. All references made to the ENGINEER OR ARCHITECT in the Technical Specifications shall be interpreted as the Design-Builder or Architect/Engineer as determined by the Design-Builder.

The scope of work is to include, but is not limited to, the following items:

1. Temporary power and lights. Reference the Project Manual, Section G, Section 01500 – Construction Facilities and Temporary Controls for additional clarifications regarding these items.

2. All electrical and special systems demolition, removal and proper disposal to allow for new work. Patch holes to match adjacent materials.

3. All electrical systems complete. Reference the Project Manual, Section G, Section 01010 – Summary of Work for additional clarifications regarding scopes of work.

4. All final electrical connections at mechanical equipment and all other equipment connections including but not limited to starters for mechanical equipment and controlled access doors.

5. All testing required for this Bid Package. Reference the Project Manual Section G, Section 01650 – Starting of Systems and Section 01700 – Contract Closeout.

6. All necessary permits and inspection fees to complete the work of this Bid Package.

7. All required lighting and power feeds.

8. All required lighting and power.

9. Grounding systems as required.

10. All fire alarm systems.

11. Provisions for telephone, television and computer networking, ie conduits and raceways. Telephone, television and computer network cabling is by Owner.

12. All hoisting, setting and installation of all equipment/materials to be installed under this Bid Package.

13. All cutting and patching required to install the work of this Bid Package. Cut/Form all holes for penetrations to permit proper sealing. All firestopping of penetrations to obtain proper fire rating.

14. All caulking and sealing of conduit, piping, equipment and all other items associated with the Bid Package to complete the installation.

15. All layout, alignment and installation of all sleeves and/or embeds required for this Bid Package ahead of concrete re-steel placement.

16. Furnishing of all required access panels through finished ceilings and walls. Installation of access panels are by others.

17. All work must meet National Electric Code (NEC) latest adopted version with amendments by Authorities Having Jurisdiction (AHJs), applicable State of Michigan, local codes and conditions.

Excluded from this Subcontractor's work is:

1. Telephone, television and computer network cabling, (by Owner).

Special Considerations:

1. Coordinate with Bid Package 15000 Subcontractor for rough-in capability.

2. Review Mechanical specifications for additional clarification regarding controls.

3. Coordinate with the Bid Packages 06000 and 15000 Subcontractors for all connections, interconnections, controls and devices required for this Bid Package.

4. Coordinate with Bid Package 06000 Subcontractor all masonry penetrations.

5. Coordinate with Bid Package 06000 for wiring required for security hardware.

6. Coordinate with Bid Package 06000, 09500, and 15000 Subcontractors final locations of lighting fixtures.

7. Coordinate and locate all equipment housekeeping pads for installation by Bid Package 06000 Subcontractor.

8. Coordinate all holes for penetrations by this Bid Package with the Subcontractor in whose work the piping penetrates.

9. Coordinate the electrical characteristics for all the electric motors furnished and installed as part of this Bid Package with the Bid Package 15000 Subcontractor, to provide power to the motors, in order to assure proper operation of all equipment.

10. Coordinate with utilities and Owner.

11. Review the access requirements for all major pieces of equipment and coordinate their delivery dates with the Design-Builder so they can be reflected in the construction schedule. Identify to the Design-Builder any major piece of equipment that will require special handling, special access considerations, before or after hours delivery, or storage at the site. This Subcontractor has the total responsibility for the complete installation of this equipment.

12. Review the Project Manual in its entirety as it contains provisions equally applicable to the successful bidder and his sub-subcontractors. Pay special attention to the Construction Schedule and coordinate all labor, material and equipment necessary to furnish and install items required by this Bid Package to ensure project completion at or prior to the Substantial Completion Date.

END OF BID PACKAGE 16000

BID PACKAGE 17000
SECURITY

The work of this Bid Package includes the provisions of all labor, material and equipment necessary to furnish, deliver, unload, store, protect, and install all Security items listed below, as shown on the drawings and specified in the Technical Specifications:

Division 1	General Requirements
Division 28	Electronic Security and Control System

and other specifications interfacing with this work.

All references made to the CONTRACTOR in the Technical Specifications shall be interpreted as the SUBCONTRACTOR performing that section of work. All references made to the ENGINEER OR ARCHITECT in the Technical Specifications shall be interpreted as the Design-Builder or Architect/Engineer as determined by the Design-Builder.

The scope of work is to include, but is not limited to, the following items:

1. The Electronic Security and Control System complete.

2. All electrical work (wiring, conduit, breakers, receptacles, connections, etc.) that is not specifically shown on the E100 Series drawings shall be by this Bid Package.

3. All testing required for this Bid Package. Reference the Project Manual Section G, Section 01650 – Starting of Systems and Section 01700 – Contract Closeout.

4. All necessary permits and inspection fees to complete the work of this Bid Package.

5. All cutting and patching required to install the work of this Bid Package. Cut/Form all holes for penetrations to permit proper sealing. All firestopping of penetrations to obtain proper fire rating.

6. All caulking and sealing of conduit, piping, equipment and all other items associated with the Bid Package to complete the installation.

7. All work must meet National Electric Code (NEC) latest adopted version with amendments by Authorities Having Jurisdiction (AHJs), applicable State of Michigan, local codes and conditions.

Excluded from this Subcontractor's work is:

1. Telephone, television and computer network cabling, (by Owner).

2. Security for Detention Doors 601, 603, and 604 by others.

Special Considerations:

1. Coordinate with Bid Package 16000 Subcontractor for rough-in capability.

2. Review Electrical specifications for additional clarification regarding controls.

3. Coordinate with the Bid Packages 06000 and 16000 Subcontractors for all connections, interconnections, controls and devices required for this Bid Package.

4. Coordinate with Bid Package 06000 and 16000 Subcontractor all masonry penetrations.

5. Coordinate with Bid Package 06000 and 16000 for wiring required for security hardware.

6. Coordinate all holes for penetrations by this Bid Package with the Subcontractor in whose work the piping penetrates.

7. Review the access requirements for all major pieces of equipment and coordinate their delivery dates with the Design-Builder so they can be reflected in the construction schedule. Identify to the Design-Builder any major piece of equipment that will require special handling, special access considerations, before or after hours delivery, or storage at the site. This Subcontractor has the total responsibility for the complete installation of this equipment.

8. Review the Project Manual in its entirety as it contains provisions equally applicable to the successful bidder and his sub-subcontractors. Pay special attention to the Construction Schedule and coordinate all labor, material and equipment necessary to furnish and install items required by this Bid Package to ensure project completion at or prior to the Substantial Completion Date.

END OF BID PACKAGE 17000

J. SCHEDULE

J. SCHEDULE

1. Pre Award:

   A. The Construction Schedule contained in these documents is preliminary and is intended to identify latest possible completion dates. Durations and logic will be revised to improve upon milestone and final completion dates.

   B. The Schedule may be discussed with subcontractors at the Post Bid Meeting.

2. Post Award:

   A. A Scheduling Meeting with select subcontractors and suppliers may take place, at which time the Preliminary Schedule may be further developed into a CPM Construction Schedule. Detailed input from subcontractors and suppliers will be required. The level of detail will be determined by the Design-Builder. A draft Schedule will be sent to subcontractors and suppliers for review.

   B. The completed CPM Construction Schedule will be transmitted to subcontractors and suppliers for written acceptance. Written acceptance will be a condition of payment.

   C. Four week "look-ahead" schedules will be developed from the CPM Construction Schedule and reviewed in the weekly Coordination Meetings. If the subcontractor or supplier is behind schedule, as determined by the Design-Builder, a Recovery Schedule will be required from the subcontractor or supplier within three days from notice by the Design-Builder. Payment to the subcontractor or supplier will not be processed until the subcontractor or supplier is on schedule.

   D. The CPM Construction Schedule will be updated on a monthly basis, or more often if required, and reviewed in the Progress Meetings. The updates will be transmitted to the subcontractors and suppliers as part of the Progress Meeting Minutes.

Act ID	Description	Rem Dur	Early Start	Early Finish
Preconstruction				
1070	Out for Bids	18	09APR12 *	02MAY12
1080	Pre-bid Meeting	1	16APR12	16APR12
1090	Bids Due	0		02MAY12
1100	Post-bid Interviews	5	04MAY12	10MAY12
1110	Recommendation for Award	2	11MAY12	14MAY12
1120	Award Contracts	10	15MAY12	28MAY12
Construction				
Lower Level				
2010	Hazardous material abatement -	5	25JUN12	29JUN12
2150	Remove mech/elec/plumb - LL	5	23AUG12	29AUG12
2140	Selective demolition - LL	5	27AUG12	31AUG12
2510	Remove dumbwaiter	2	30AUG12	31AUG12
2160	Sawcut/remove/patch floors - LL	3	03SEP12	05SEP12
2170	Frame / furr walls - LL	5	06SEP12	12SEP12
2290	Hollow metal frames - LL	3	06SEP12	10SEP12
2180	Mech/elec/plub rough-in - LL	5	13SEP12	19SEP12
2190	Hang drywall - LL	5	18SEP12	24SEP12
2200	Tape/finish drywall - LL	5	25SEP12	01OCT12
2210	Paint - LL	5	28SEP12	04OCT12
2220	Ceramic tile - LL	3	05OCT12	09OCT12
2230	Flooring - LL	5	10OCT12	16OCT12
2240	Doors/hardware - LL	3	17OCT12	19OCT12
2260	Complete storage areas - LL	0		19OCT12
2250	Lockers/specialties - LL	3	22OCT12	24OCT12
2280	Complete Lockerroom - LL	0		24OCT12
First Floor				
2310	Hazardous material abatement -	5	18JUN12	22JUN12
2300	Demo chimney	10	25JUN12	09JUL12
2340	Temp partitions - 1st	5	06AUG12 *	10AUG12

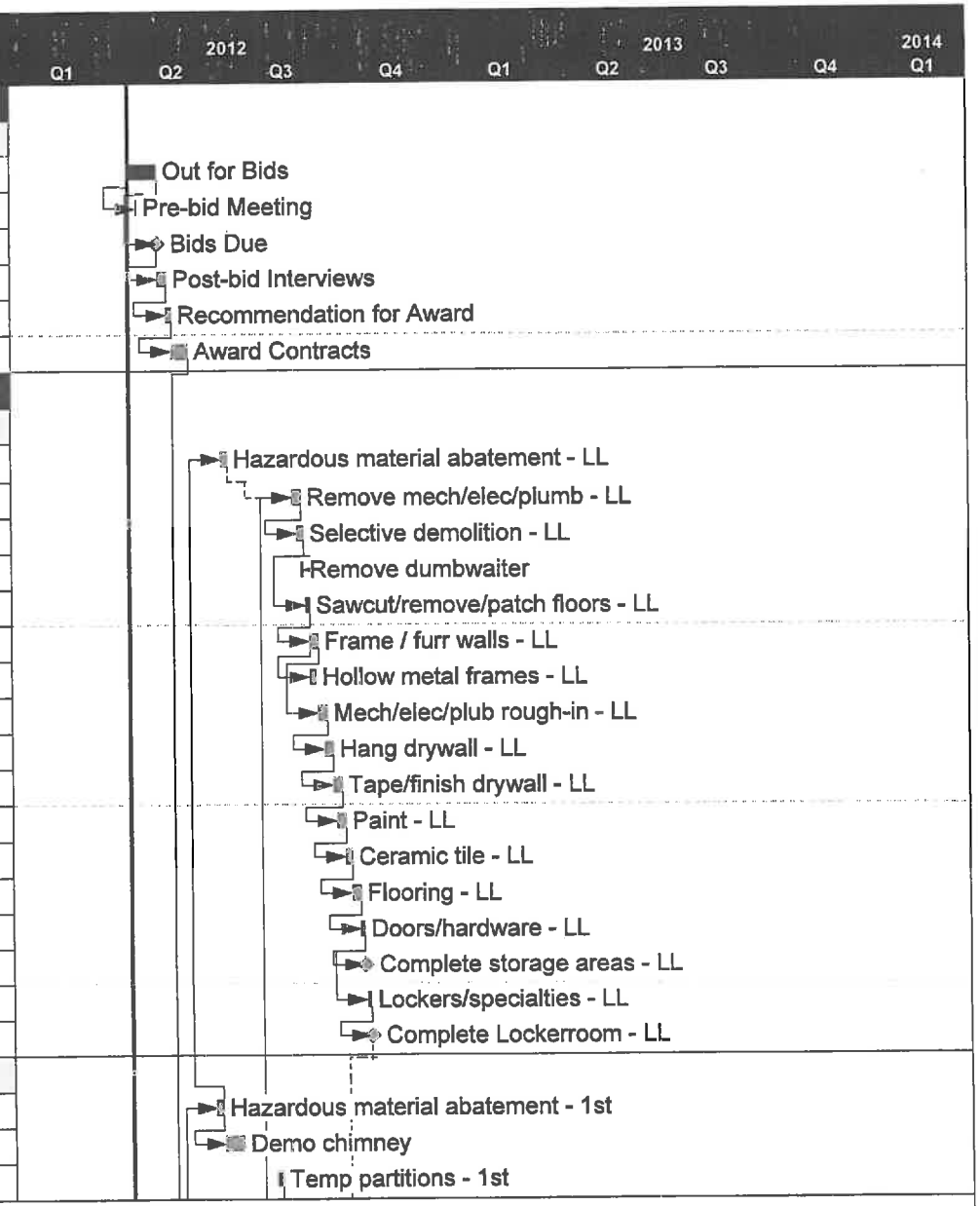

Gundlach Champion, Inc.
City / County Building Renovation

Act ID	Description	Rem Dur	Early Start	Early Finish
2320	Remove mech/elect/plumb - 1st	5	13AUG12	17AUG12
2330	Selective demolition - 1st	5	13AUG12	17AUG12
2350	Sawcut/remove/patch floors - 1st	3	20AUG12	22AUG12
2380	Frame/furr walls - 1st	10	23AUG12	05SEP12
2390	Hollow metal frames - 1st	3	23AUG12	27AUG12
2400	Mech/elect/plub rough-in - 1st	10	06SEP12	19SEP12
2410	Windows - 1st	2	06SEP12	07SEP12
2420	Hang drywall - 1st	10	20SEP12	03OCT12
2430	Tape/finish drywall - 1st	15	04OCT12	24OCT12
2440	Paint - 1st	10	25OCT12	07NOV12
2450	Ceramic tile - 1st	3	08NOV12	12NOV12
2480	Acoustical ceilings - 1st	5	08NOV12	14NOV12
2670	Casework - 1st	2	13NOV12	14NOV12
2460	Flooring - 1st	5	15NOV12	21NOV12
2490	Specialties/high density files - 1st	3	15NOV12	19NOV12
2470	Doors/hardware - 1st	3	22NOV12	26NOV12
2690	Complete 1st Floor	0		26NOV12
Second Floor				
2500	Hazardous material abatement -	5	11JUN12	15JUN12
2520	Remove mech/elect/plumb - 2nd	5	18JUN12	22JUN12
2530	Selective demolition - 2nd	5	20JUN12	26JUN12
2540	Sawcut/remove/patch floors -	3	27JUN12	29JUN12
2720	Foundations - Connector	15	27JUN12	18JUL12
2580	Frame/furr walls - 2nd	7	02JUL12	11JUL12
2710	Hollow metal frames - 2nd	3	02JUL12	05JUL12
2590	Mech/elect/plumb rough-in - 2nd	10	12JUL12	25JUL12
2550	Structural steel/decking -	10	19JUL12	01AUG12
2600	Hang drywall - 2nd	10	26JUL12	08AUG12
2560	Slab on metal deck - Connector	5	02AUG12	08AUG12
2610	Tape/finish drywall - 2nd	15	02AUG12	22AUG12
2570	CMU - Connector/2nd	7	09AUG12	17AUG12

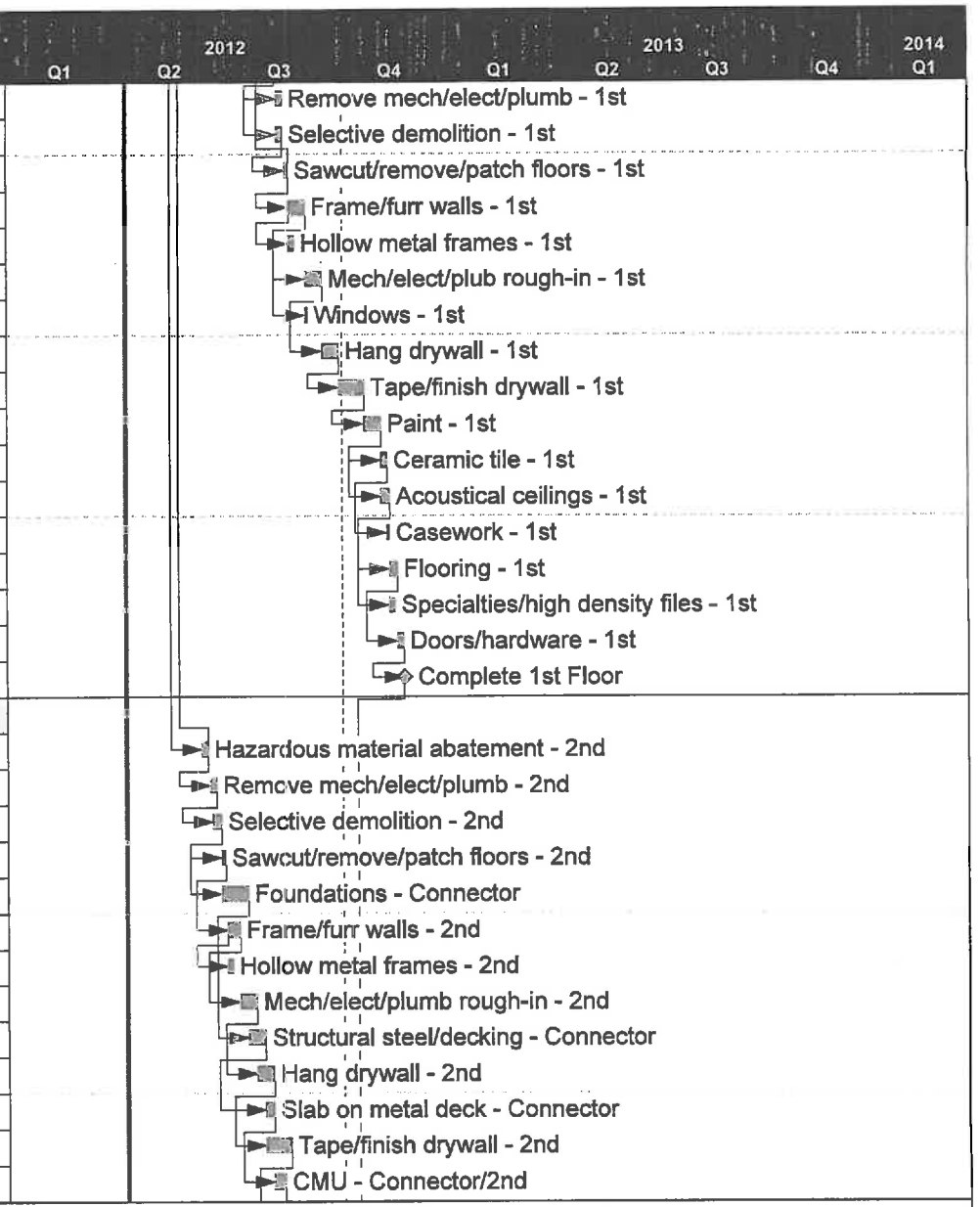

Gundlach Champion, Inc.
City / County Building Renovation

Act ID	Description	Rem Dur	Early Start	Early Finish
2730	EIFS	10	20AUG12	31AUG12
2620	Paint - 2nd	10	23AUG12	05SEP12
2630	Ceramic tile - 2nd	5	06SEP12	12SEP12
2640	Acoustical ceilings - 2nd	5	06SEP12	12SEP12
2660	Flooring - 2nd	10	13SEP12	26SEP12
2680	Casework / woodwork - 2nd	5	13SEP12	19SEP12
2650	Doors/hardware - 2nd	5	27SEP12	03OCT12
2700	Complete 2nd Floor	0		03OCT12
Closeout				
5000	Substantial Completion	0		26NOV12
5010	Punchlist	10	27NOV12	10DEC12
5020	Close-out Documents	25	27NOV12	02JAN13
5030	Owner Training	5	27NOV12	03DEC12
5040	Final Completion	0		02JAN13

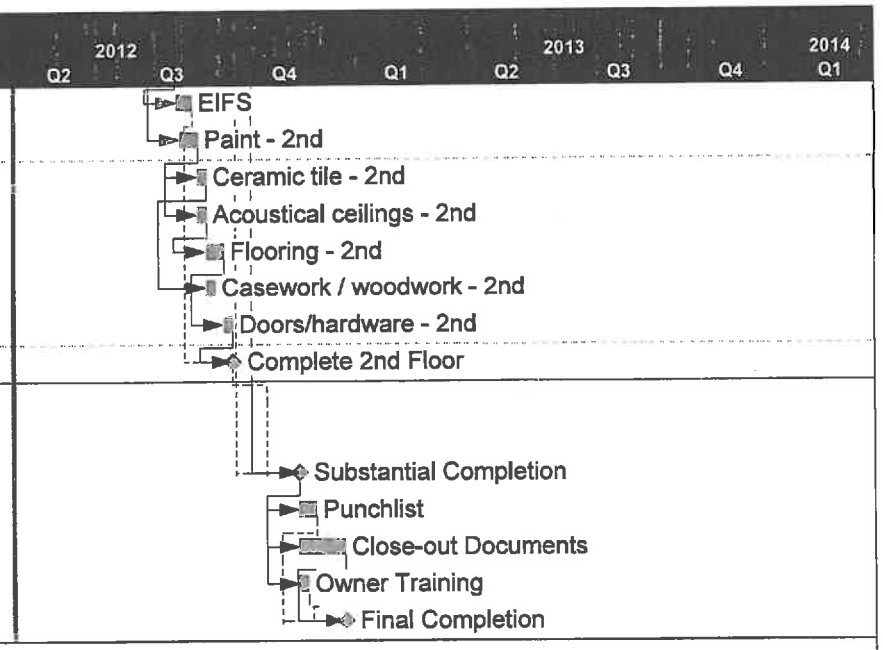

Gundlach Champion, Inc.
City / County Building Renovation

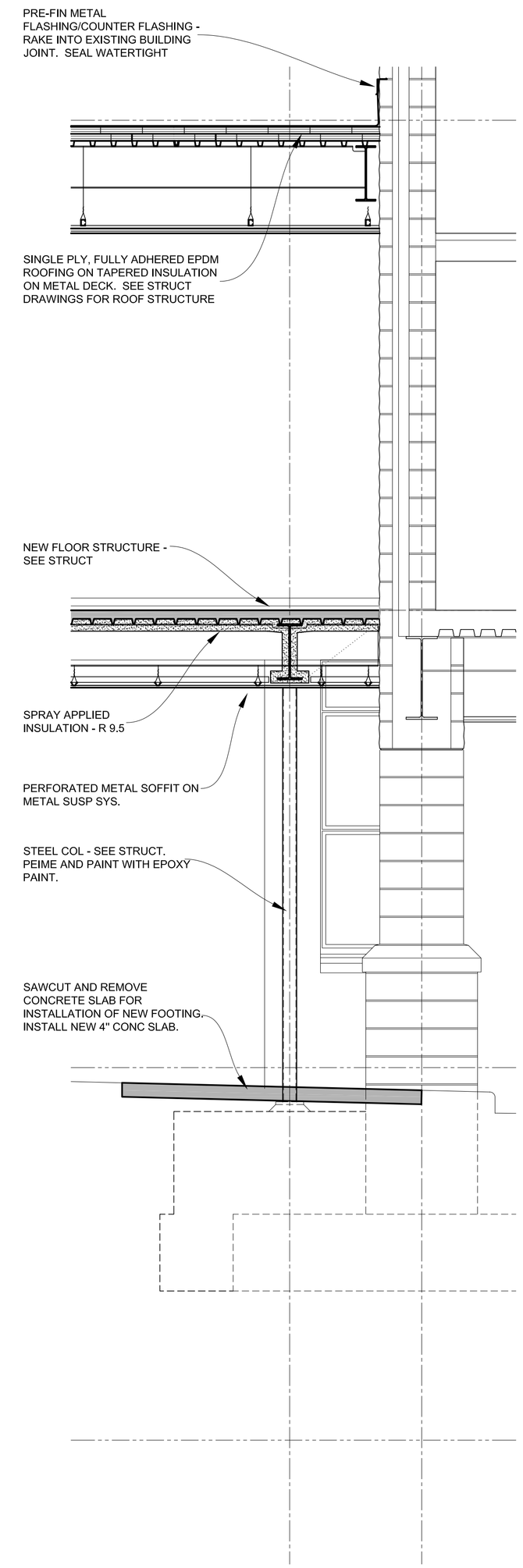

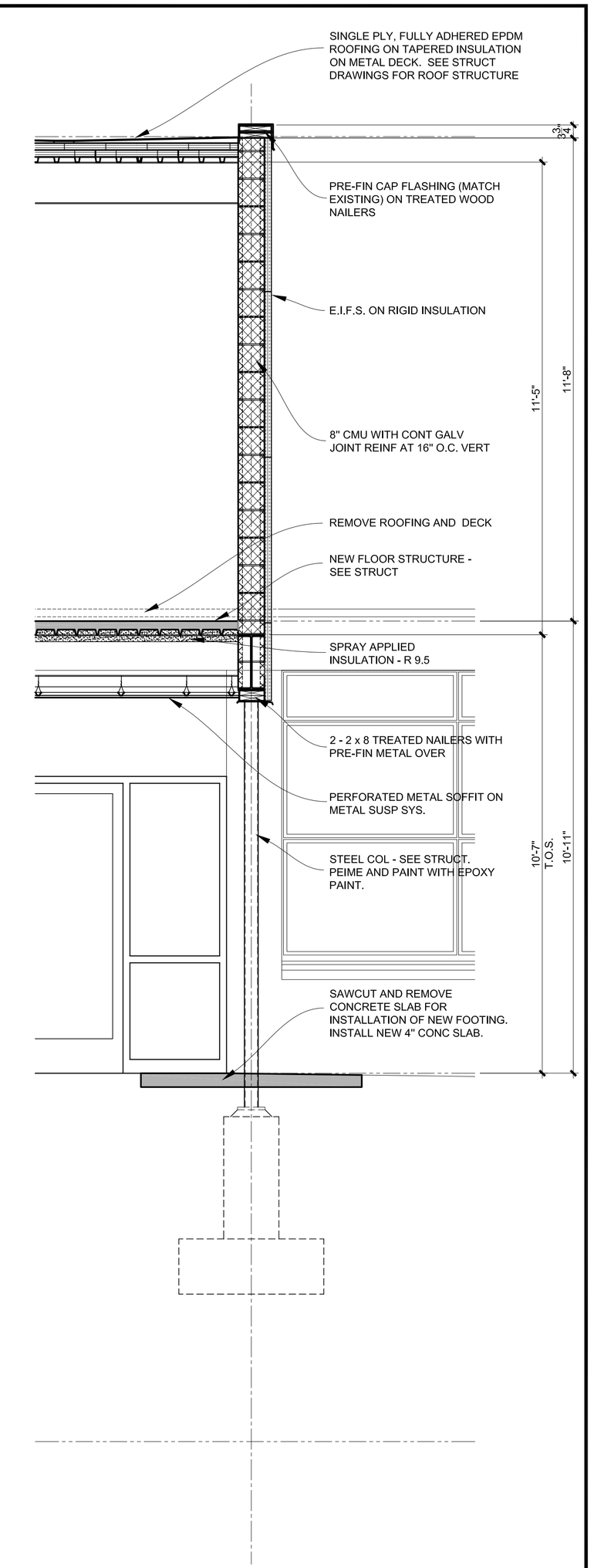

Not Used	15	Wall Sections	14	Wall Sections	13
Note:	Scale: 1/2" = 1'-0"	Note:	Scale: 1/2" = 1'-0"	Note:	Scale: 1/2" = 1'-0"

Consultant:

Chippewa County
City/County Building Renovation
325 Court Street
Sault Ste. Marie, MI 49783

Project Title:

Landmark Design Group, P.C.
3900 Linden Ave. S.E. Suite C, Grand Rapids, MI 49548-3406
v: (616) 956-0606

issued for:	date:
Bids and Permits	04-09-2012

Seal:

Project Number:

Landmark Project Number:
10-007

© 2010 Landmark Design Group P.C.

A504

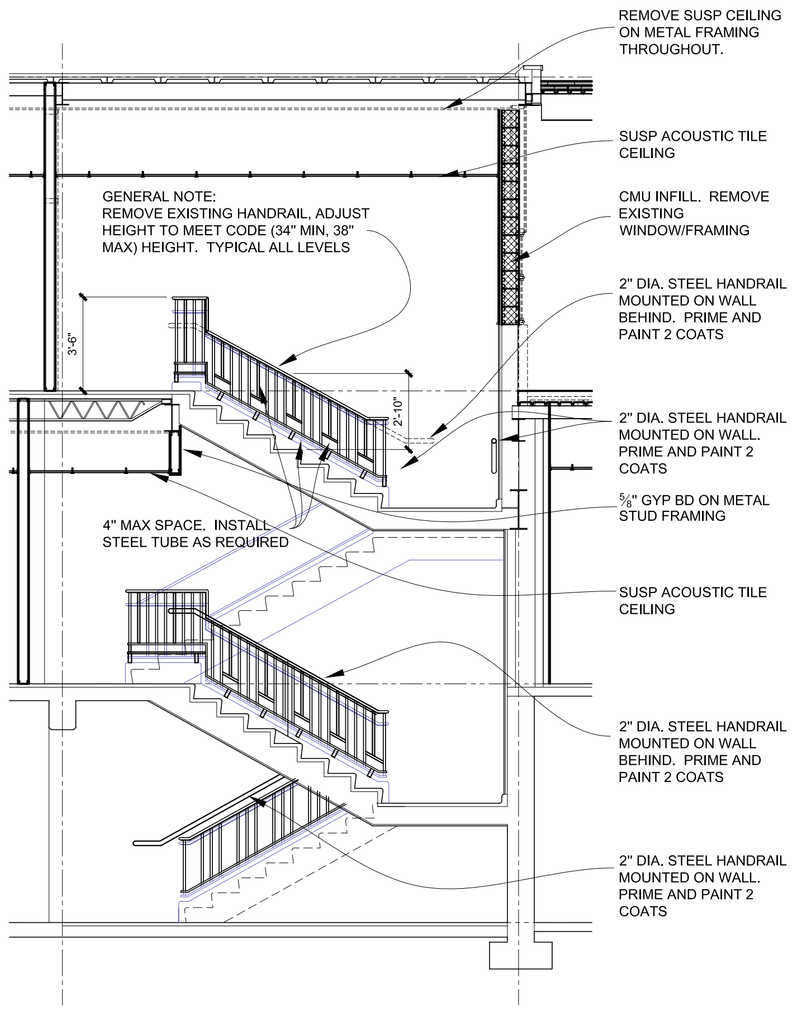

NOTE: CLEAN, PRIME AND PAINT ALL EXISTING AND NEW HANDRAILS

Stair Section	08
Note:	Scale: 1/4" = 1'-0"

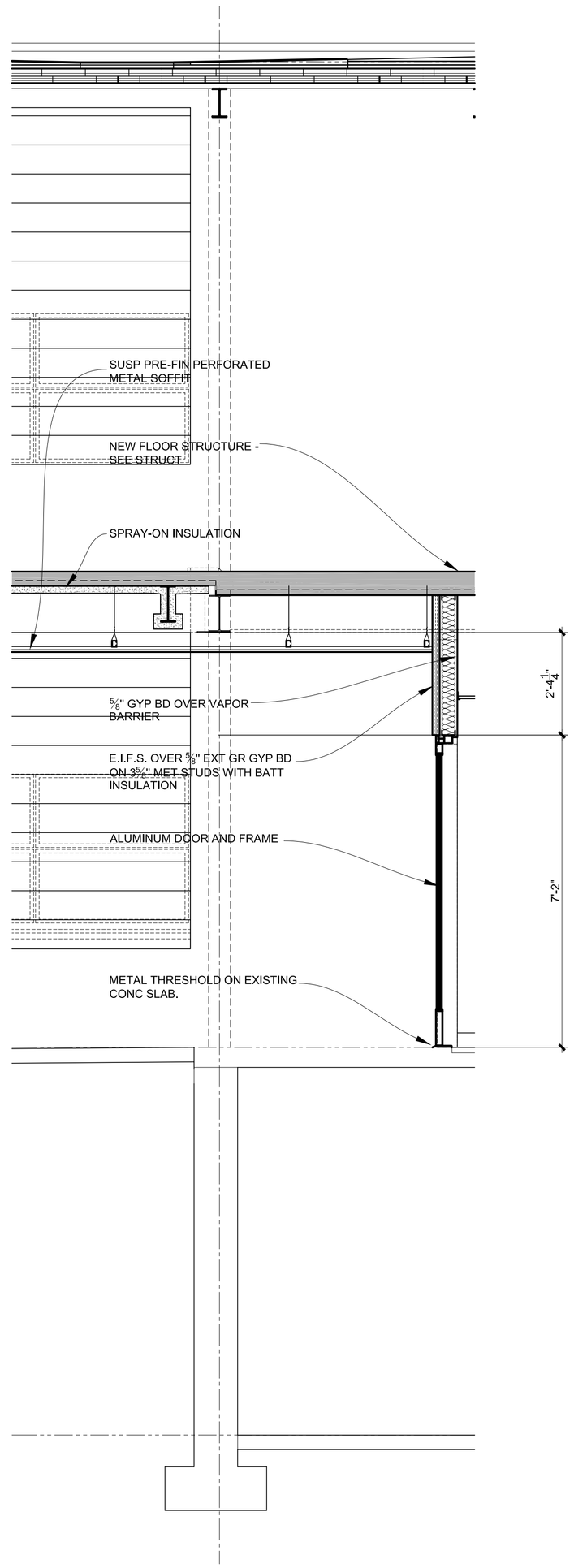

Wall Sections	16
Note:	Scale: 1/2" = 1'-0"

Wall Sections	15
Note:	Scale: 1/2" = 1'-0"

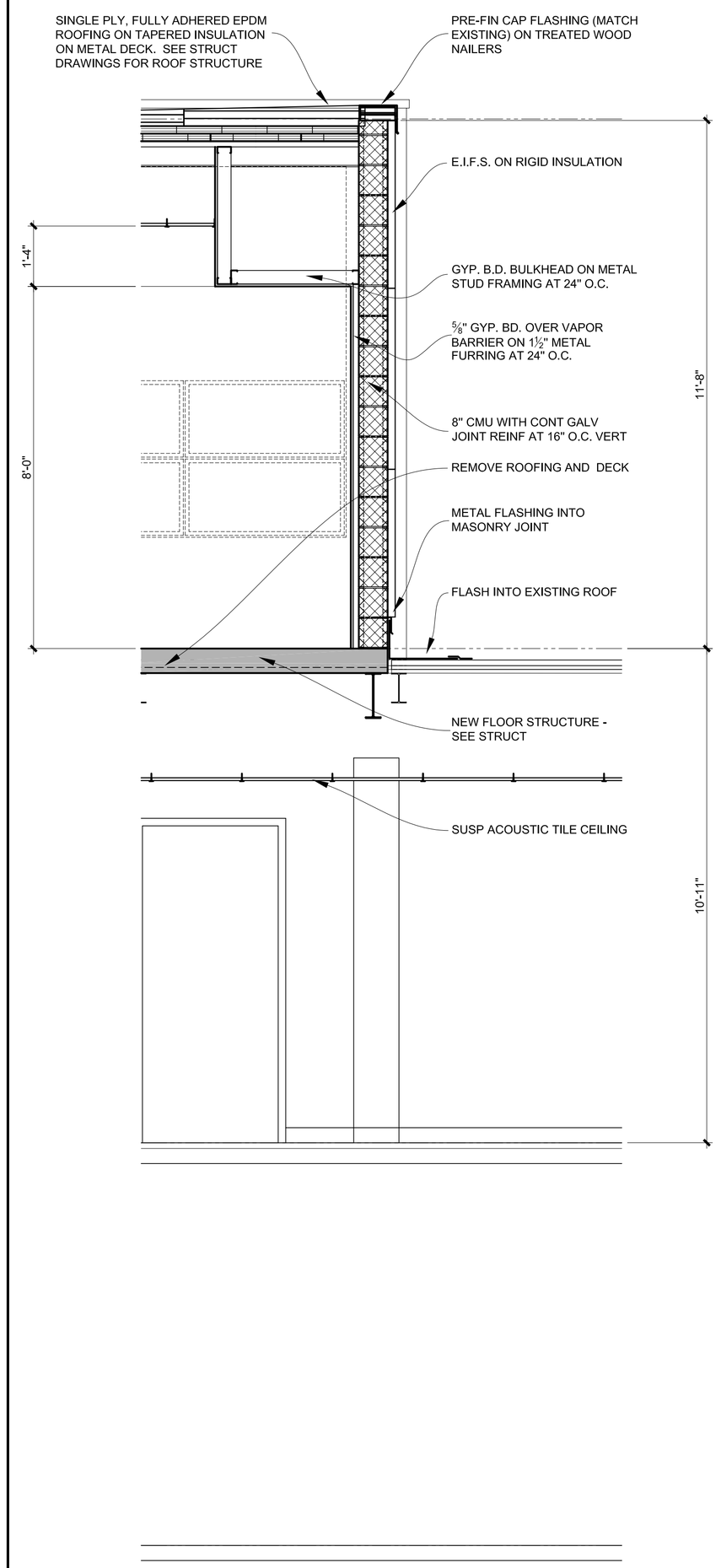

Wall Sections	14
Note:	Scale: 1/2" = 1'-0"

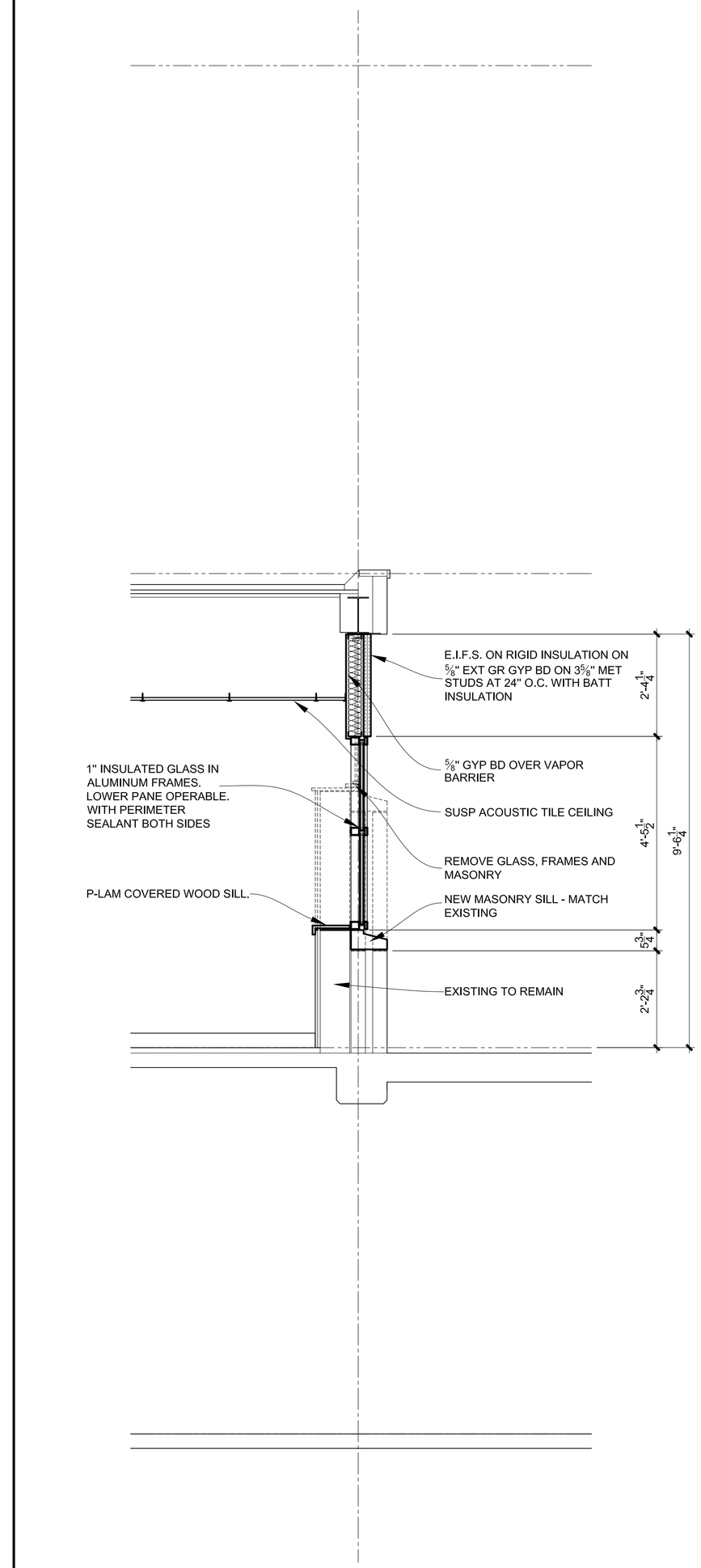

Wall Sections	13
Note:	Scale: 1/2" = 1'-0"

Consultant:

Chippewa County
City/County Building Renovation
325 Court Street
Sault Ste. Marie, MI 49783

Project Title:

Landmark Design Group, P.C.
3900 Linden Ave. S.E. Suite C, Grand Rapids, MI 49548-3406
v: (616) 956-0606

date:	issued for:
04-09-2012	Bids and Permits

Seal:

Project Number:

Landmark Project Number:

10-007

© 2010 Landmark Design Group P.C.

A503

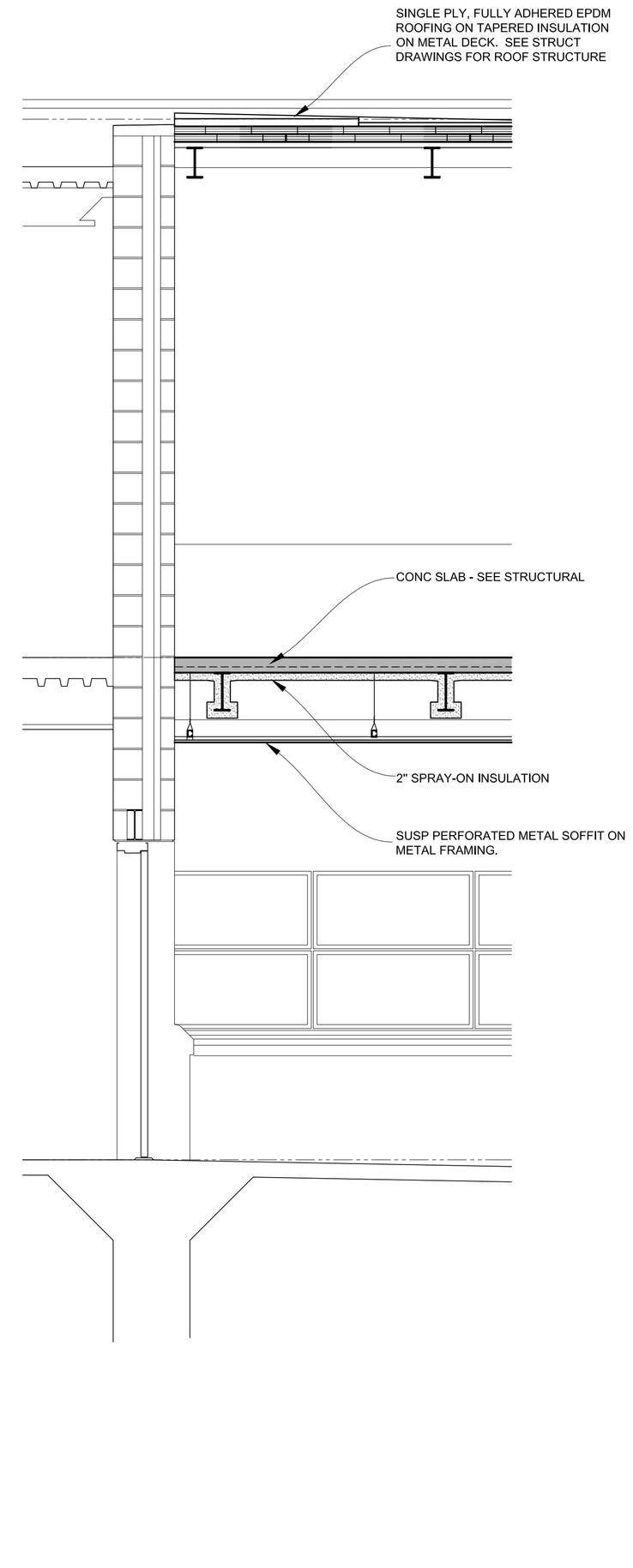

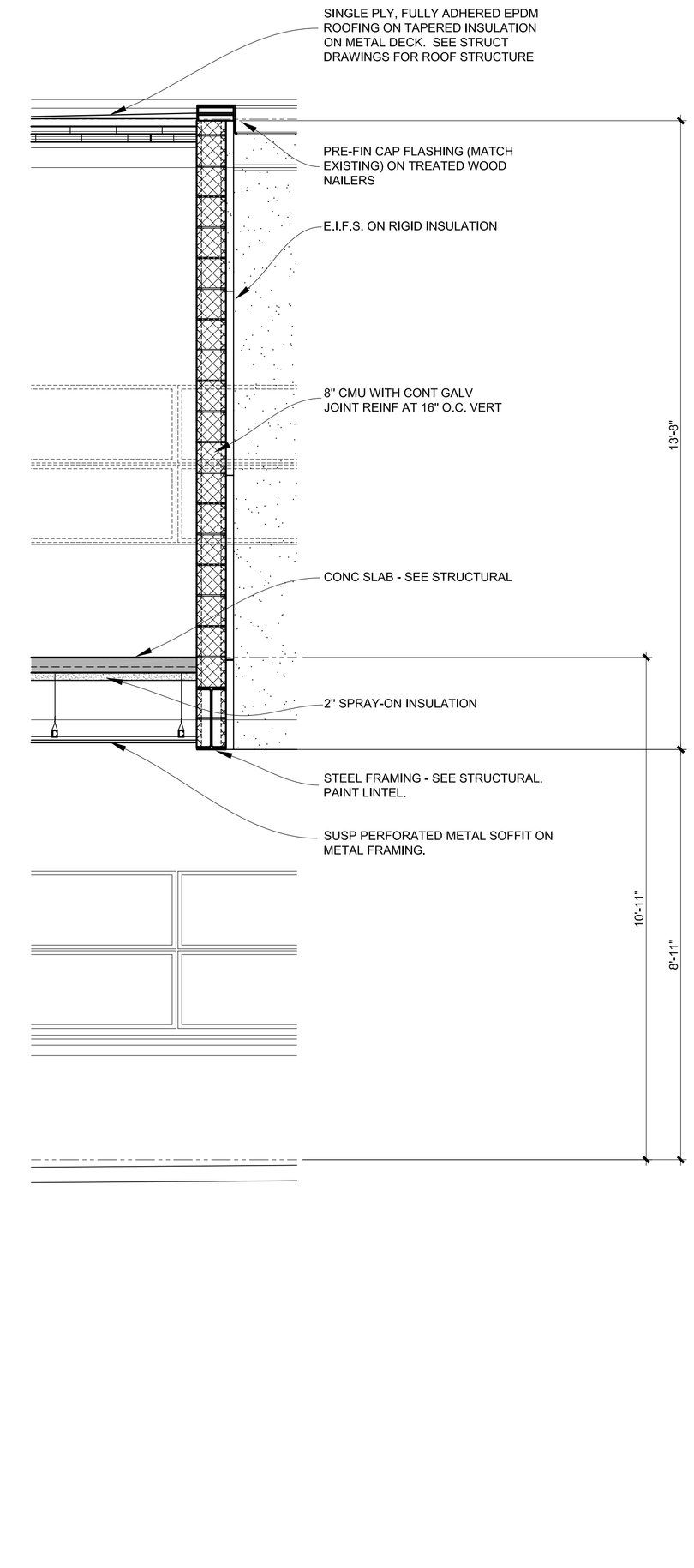

Not Used	16	Not Used	15	Wall Sections	14	Wall Sections	13
Note:	Scale: 1/2" = 1'-0"	Note:	Scale: 1/2" = 1'-0"	Note:	Scale: 1/2" = 1'-0"	Note:	Scale: 1/2" = 1'-0"

Consultant:

Chippewa County
City/County Building Renovation
325 Court Street
Sault Ste. Marie, MI 49783

Project Title:

Landmark Design Group, P.C.
3900 Linden Ave. S.E. Suite C, Grand Rapids, MI 49548-3406
v: (616) 956-0606

date:	issued for:
04-09-2012	Bids and Permits

Seal:

Project Number:

Landmark Project Number:
10-007

© 2010 Landmark Design Group P.C.

A502

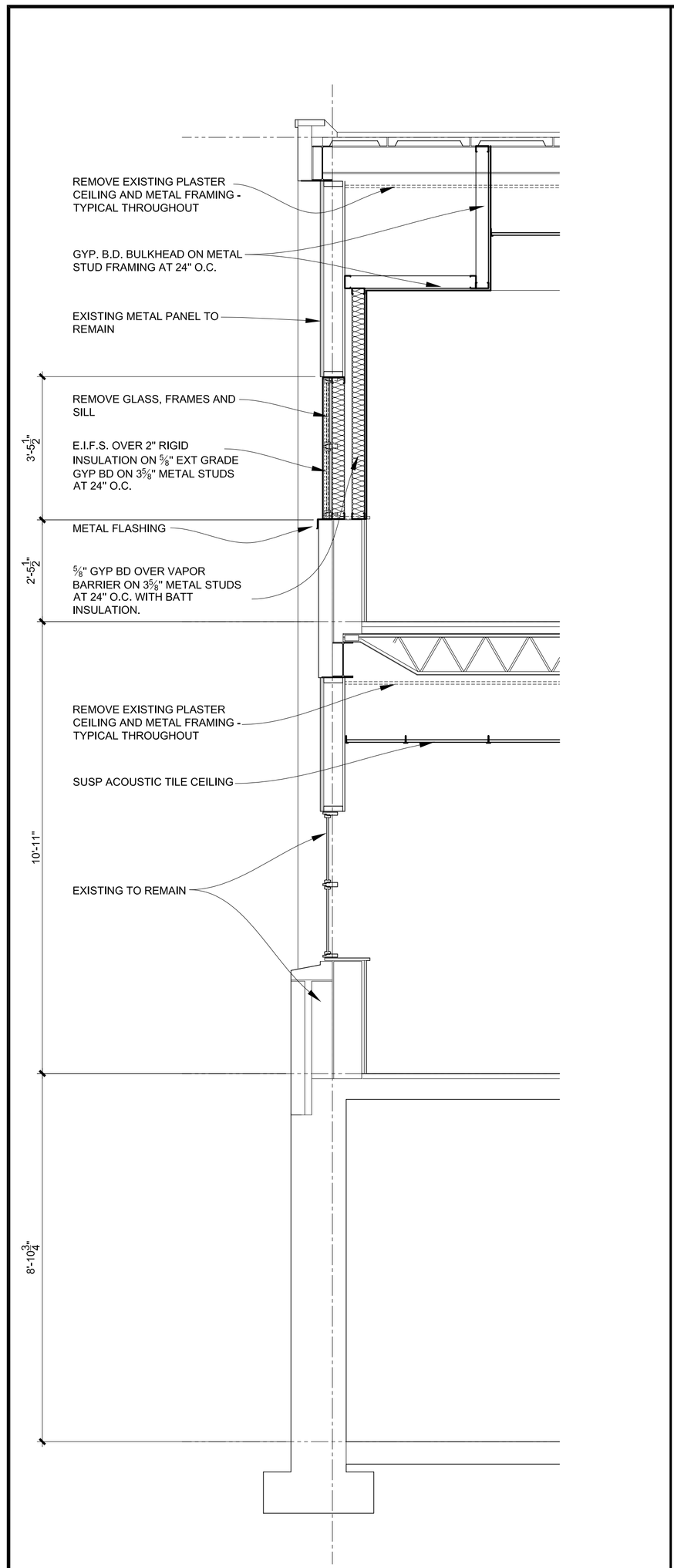

Wall Sections	16
Note:	Scale: 1/2" = 1'-0"

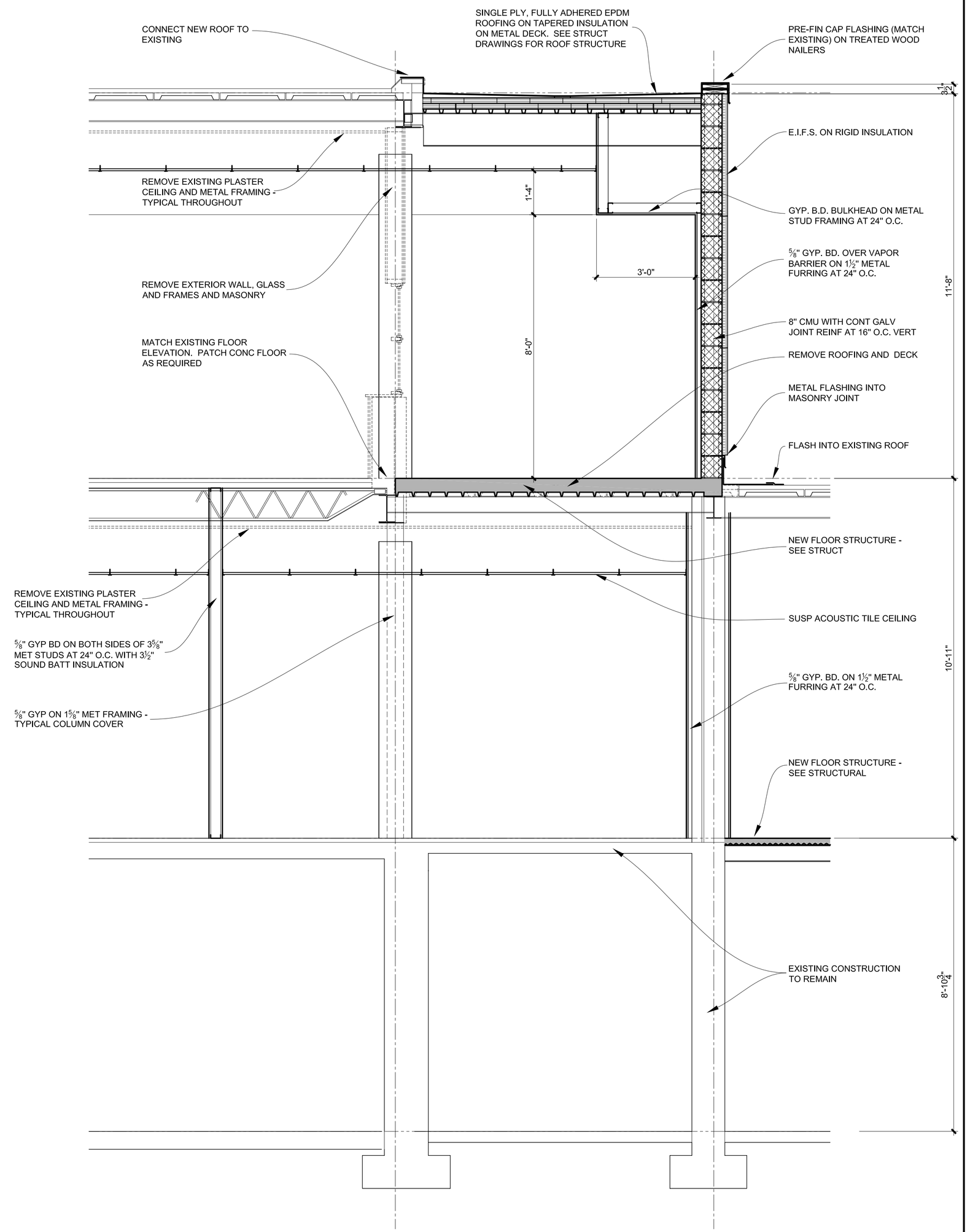

Wall Sections	14
Note:	Scale: 1/2" = 1'-0"

Not Used	13
Note:	Scale: 1/2" = 1'-0"

Consultant:

Chippewa County
City/County Building Renovation
325 Court Street
Sault Ste. Marie, MI 49783

Project Title:

Landmark Design Group, P.C.
3900 Linden Ave. S.E. Suite C, Grand Rapids, MI 49548-3406
v: (616) 956-0606

issued for:	date:
Bids and Permits	04-09-2012

Seal:

Project Number:

Landmark Project Number:
10-007

© 2010 Landmark Design Group P.C.

A501

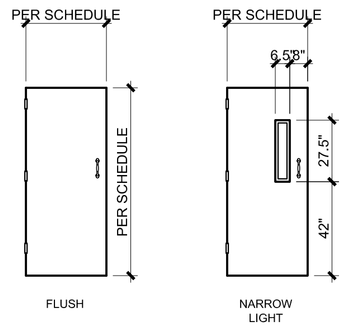

DETENTION GLASS TYPICAL - SEE SCHEDULE / FRAME GLASS TO MATCH

Detention Door Elevations — 04

Note: 1/4" = 1'-0"

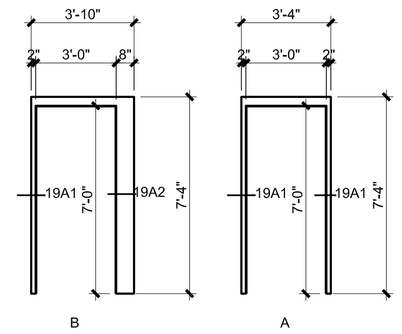

Detention Door Frames — 03

Note: 1/4" = 1'-0"

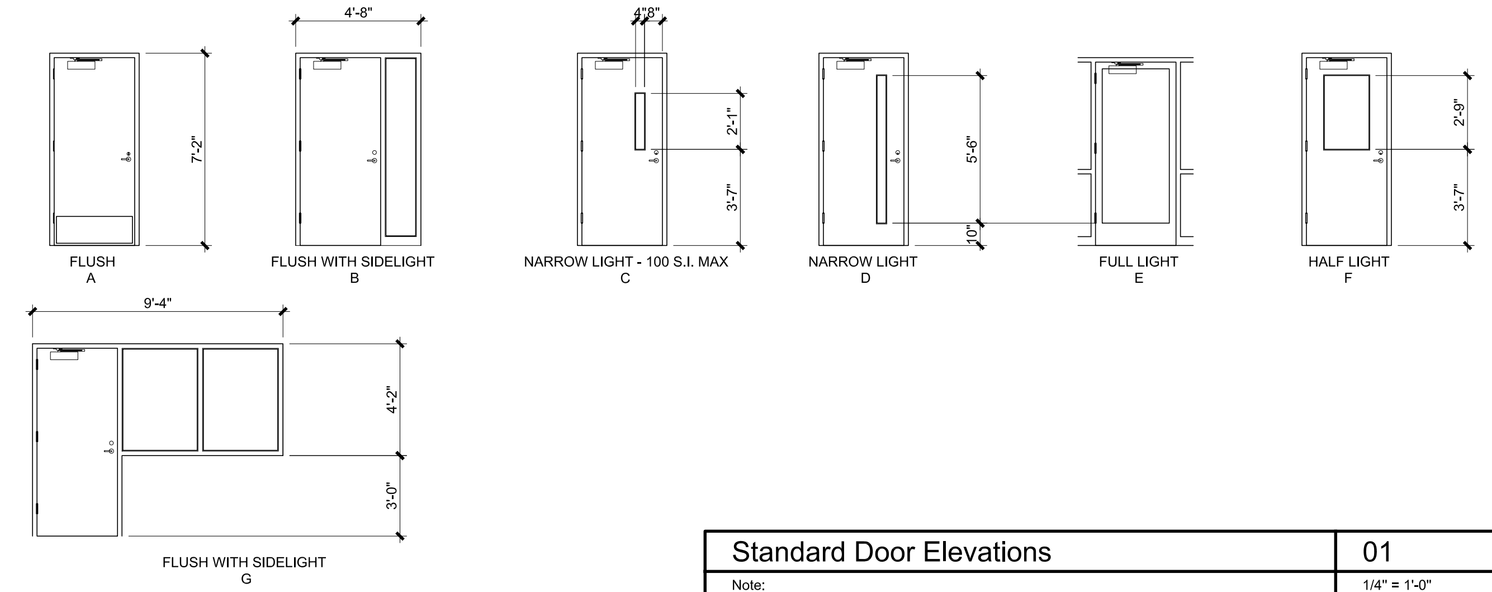

Standard Door Elevations — 01

Note: 1/4" = 1'-0"

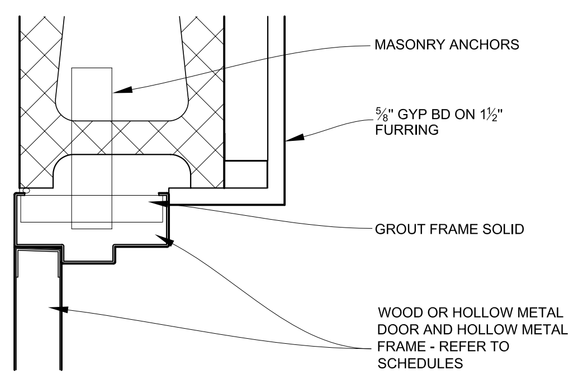

Jamb at CMU with Gypsum Board — 08

Note: 3" = 1'-0"

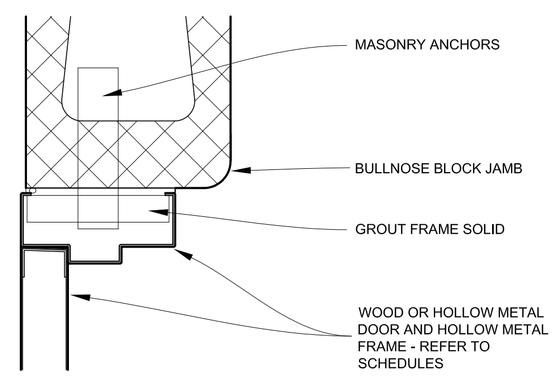

Jamb at CMU — 07

Note: 3" = 1'-0"

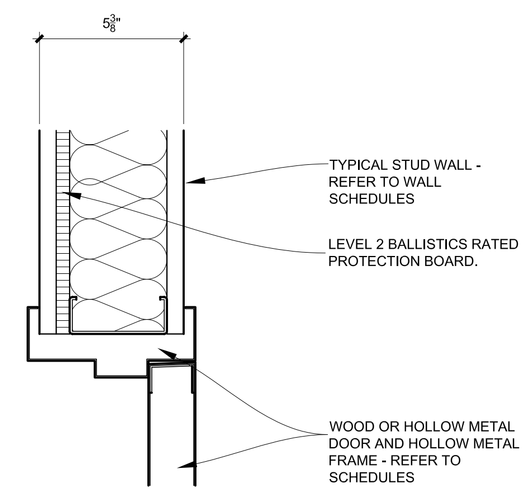

Jamb with Bullet Protection Board — 06

Note: 3" = 1'-0"

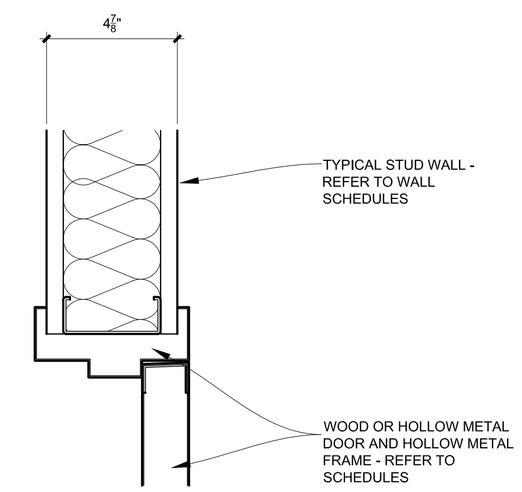

Standard Jamb — 05

Note: 3" = 1'-0"

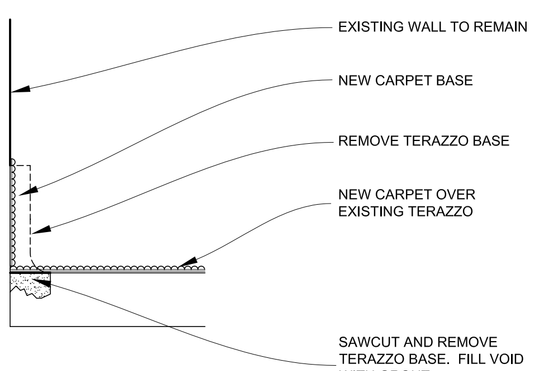

Corridor Base at existing terazzo floor — 12

Note: 3" = 1'-0"

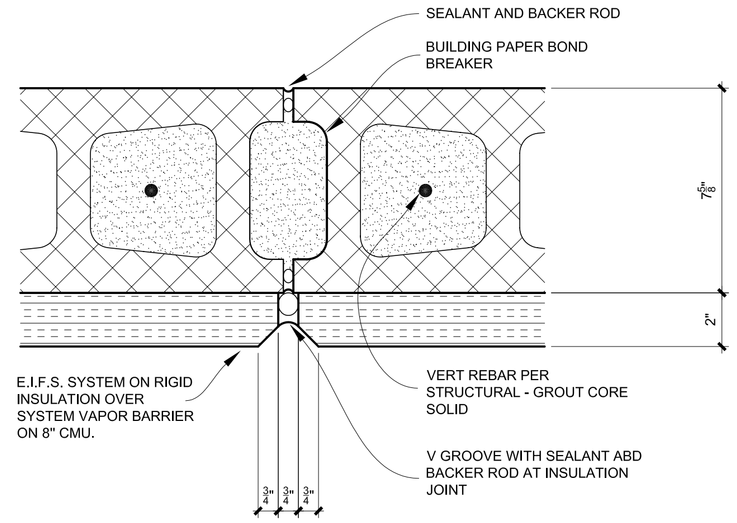

Expansion Joint — 11

Note: 3" = 1'-0"

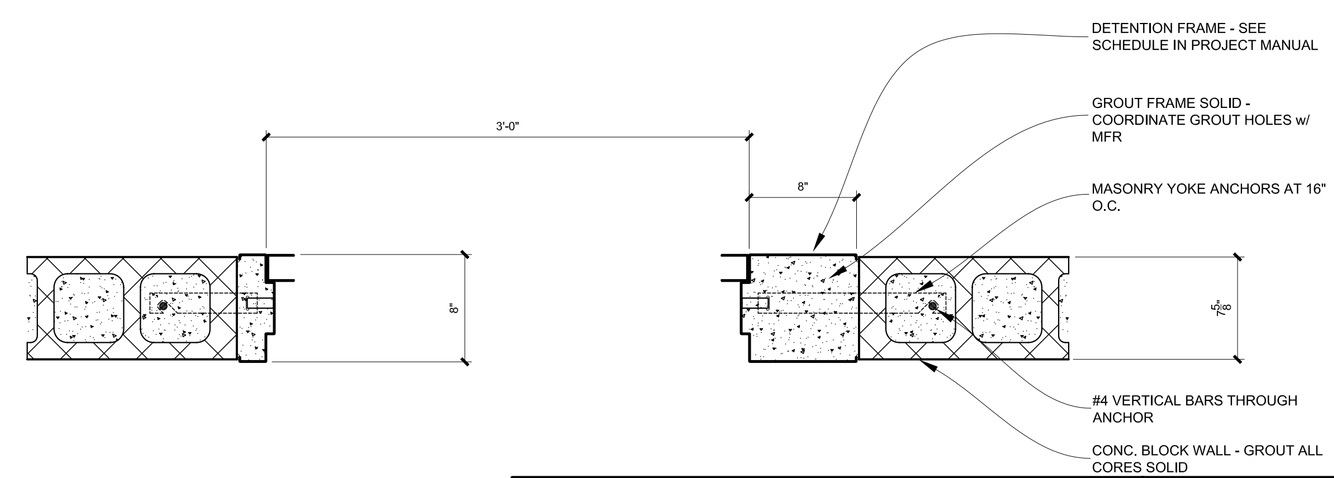

Detention Frame — 09

Note: 1 1/2" = 1'-0"

Consultant:

Chippewa County
City/County Building Renovation
325 Court Street
Sault Ste. Marie, MI 49783

Project Title:

Landmark Design Group, P.C.
3900 Linden Ave. S.E. Suite C, Grand Rapids, MI 49548-3406
v: (616) 956-0606

issued for:	
Bids and Permits	

date:	
04-09-2012	

Seal:

Project Number:

Landmark Project Number: 10-007

© 2010 Landmark Design Group P.C.

A413

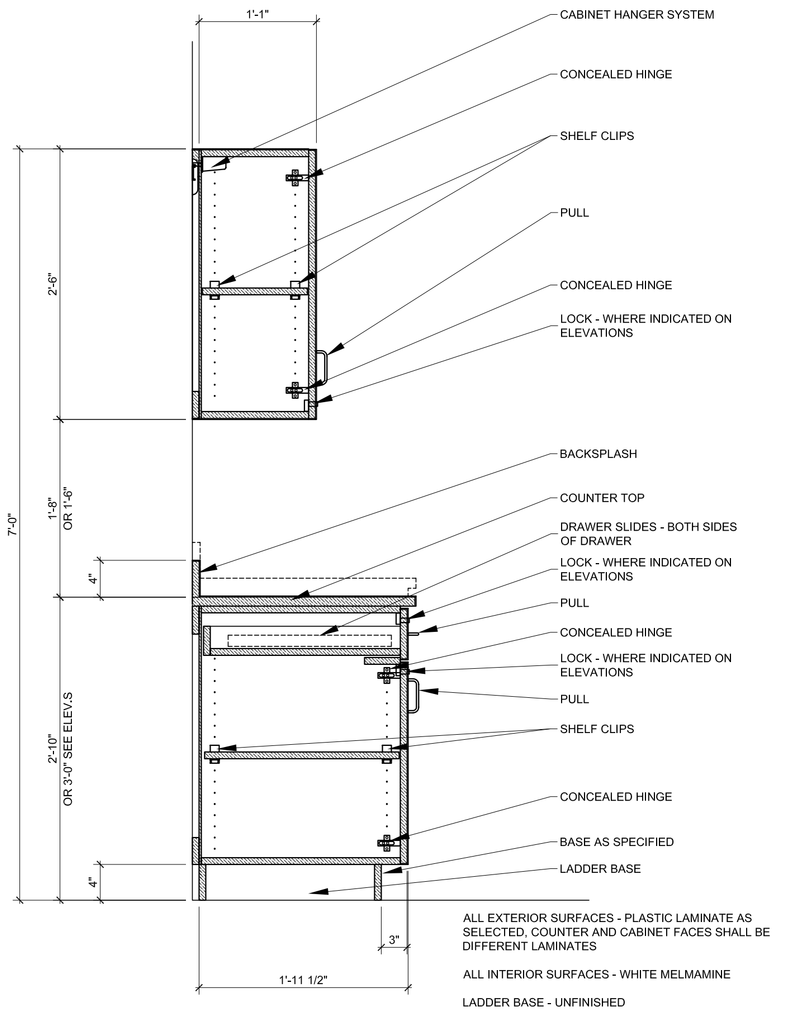

ALL EXTERIOR SURFACES - PLASTIC LAMINATE AS SELECTED, COUNTER AND CABINET FACES SHALL BE DIFFERENT LAMINATES

ALL INTERIOR SURFACES - WHITE MELMAMINE

LADDER BASE - UNFINISHED

PANEL MATERIAL SHALL BE WATER RESISTANT ALL COMPONENTS

DRAWER BOX, DRAWER SLIDES, DRAWER HANDLE, DRAWER LOCK AND BASE CABINET SHELF AND CLIPS NOT REQUIRED AT SINK BASE CABINETS

Court Room Section | 08
Note: | Scale: 1" = 1'-0"

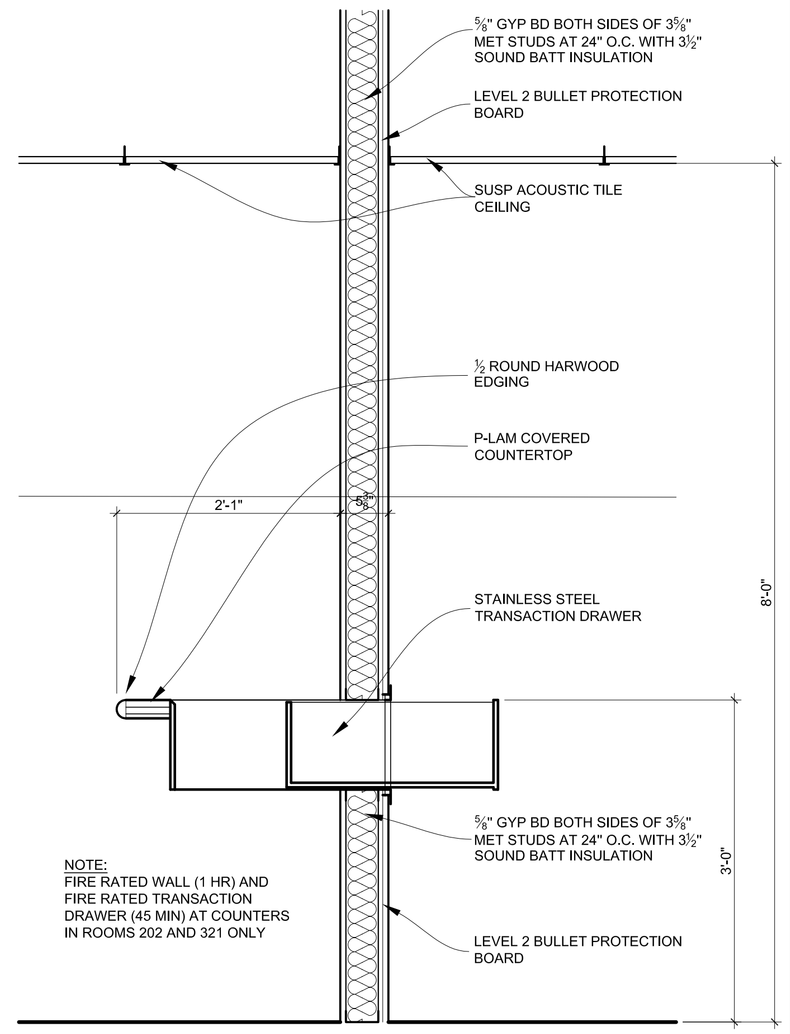

NOTE:
FIRE RATED WALL (1 HR) AND FIRE RATED TRANSACTION DRAWER (45 MIN) AT COUNTERS IN ROOMS 202 AND 321 ONLY

Tyipical Transaction Drawer | 07
Note: | Scale: 1" = 1'-0"

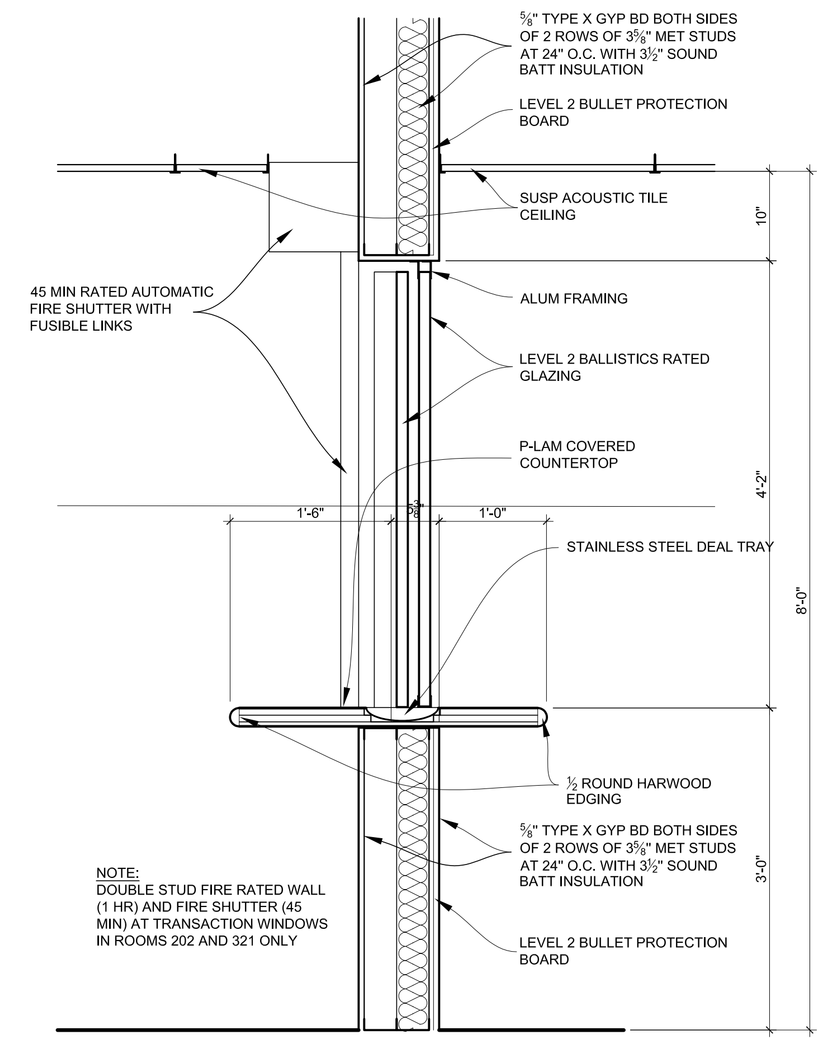

NOTE:
DOUBLE STUD FIRE RATED WALL (1 HR) AND FIRE SHUTTER (45 MIN) AT TRANSACTION WINDOWS IN ROOMS 202 AND 321 ONLY

Transact'n Window - 206, 214, 228, 224 and 327 | 06
Note: | Scale: 1" = 1'-0"

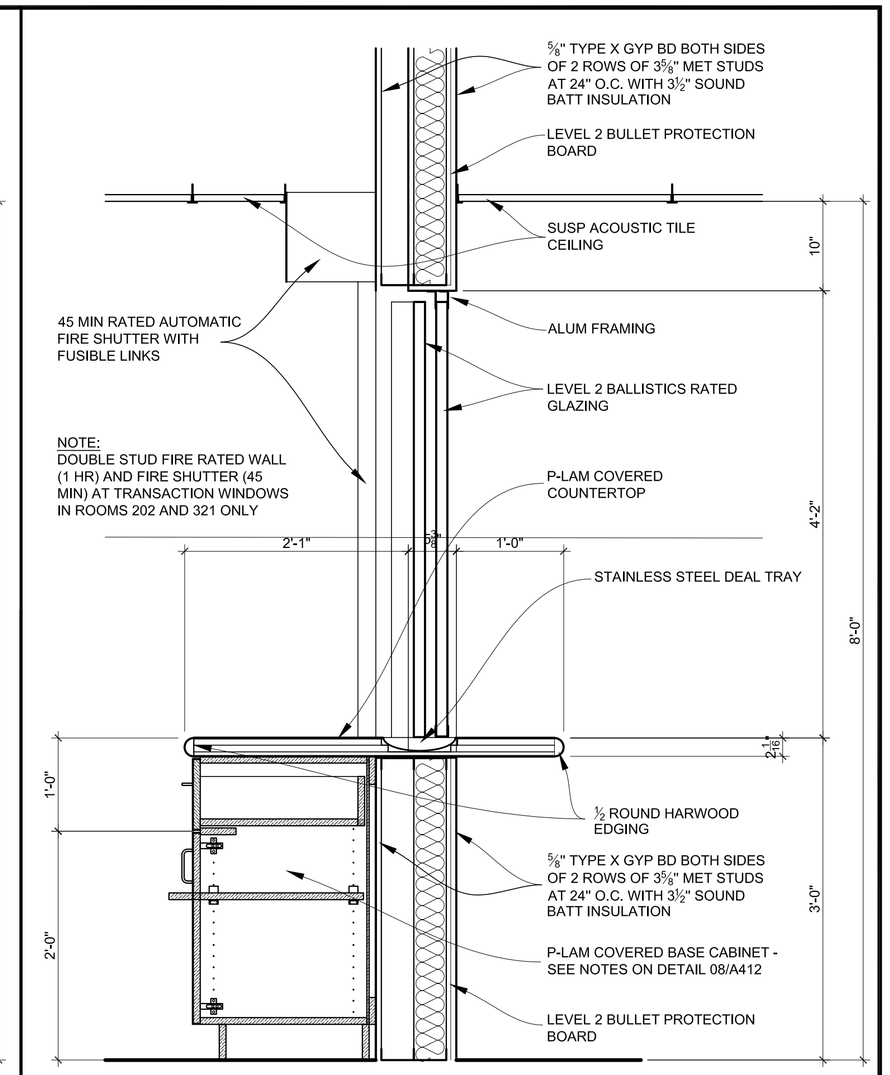

NOTE:
DOUBLE STUD FIRE RATED WALL (1 HR) AND FIRE SHUTTER (45 MIN) AT TRANSACTION WINDOWS IN ROOMS 202 AND 321 ONLY

Transaction Window - Open Office 321 | 05
Note: | Scale: 1" = 1'-0"

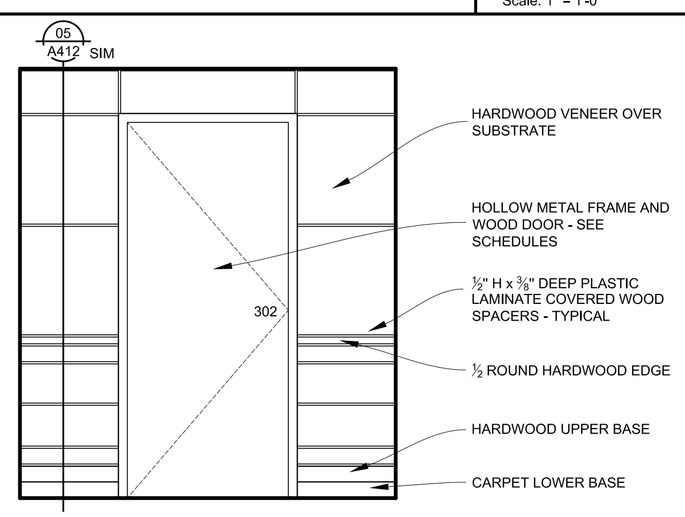

Elevation - North end of Corridor 304 | 12
Note: | Scale: 1/2" = 1'-0"

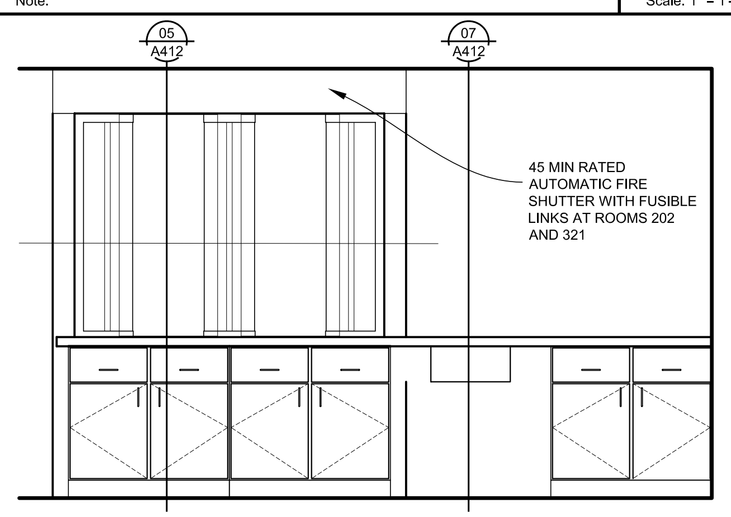

Millwork Elevation - Rm. 321 | 11
Note: | Scale: 1/2" = 1'-0"

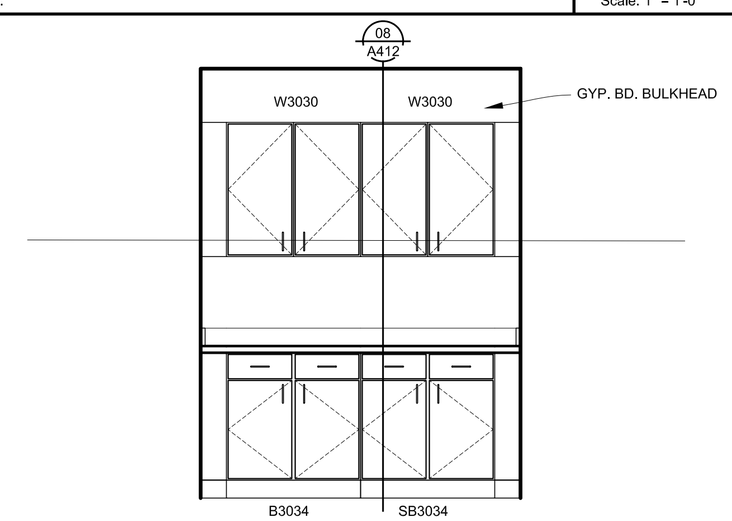

Millwork Elevation - Corridor 303 | 10
Note: | Scale: 1/2" = 1'-0"

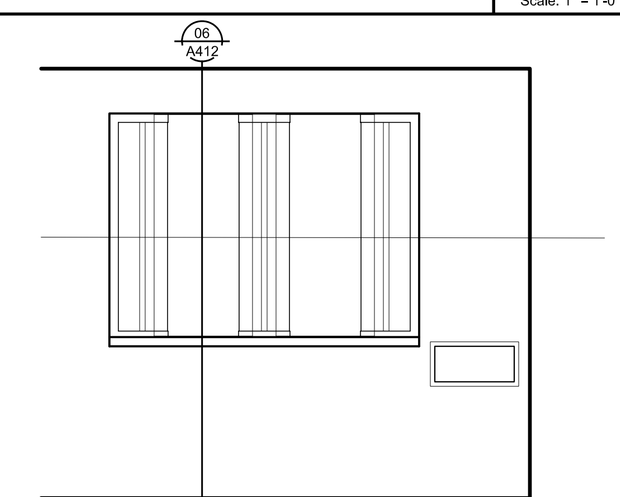

ELEVATION OF TRANSACTION WINDOW IN WAITING 206. TRANSACTION WINDOWS IN RM. 214, 228, 288AND 325 ARE SIMILAR (SINGLE OPENING)

Transaction Window Elevation | 09
Note: | Scale: 1/2" = 1'-0"

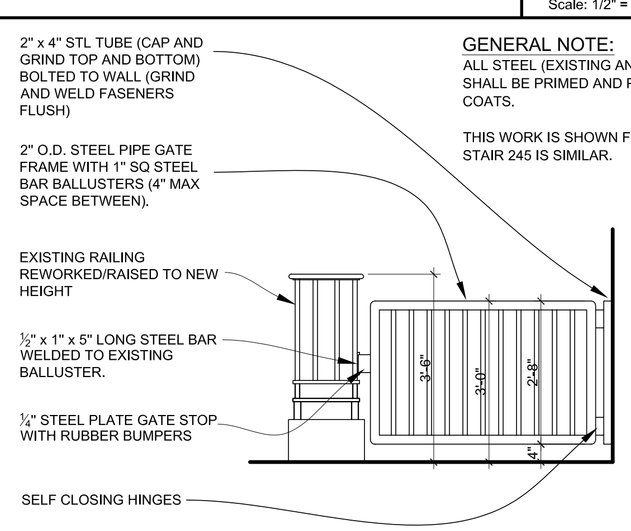

GENERAL NOTE:
ALL STEEL (EXISTING AND NEW) SHALL BE PRIMED AND PAINTED - 2 COATS.

THIS WORK IS SHOWN FOR STAIR 218. STAIR 245 IS SIMILAR.

Stair Gate | 16
Note: | Scale: 1/2" = 1'-0"

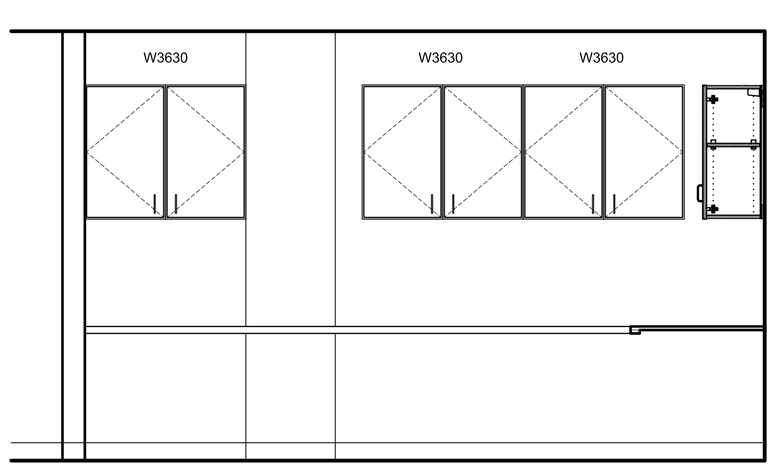

SEE NOTES ON 13/A411

Millwork Elevation - Rm. 264 | 15
Note: | Scale: 1/2" = 1'-0"

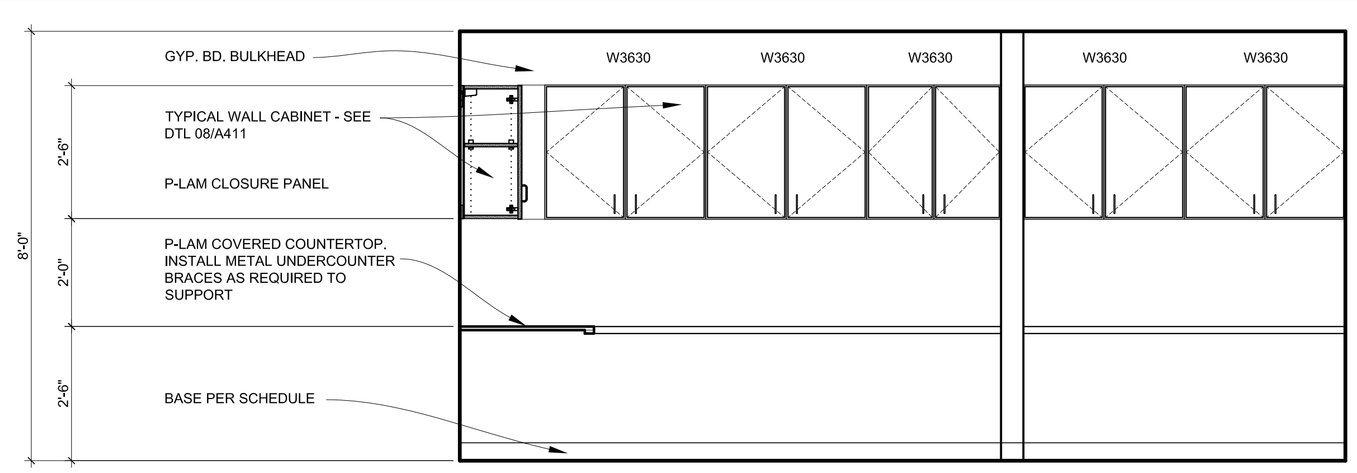

Millwork Elevation - Rm. 264 | 13
Note: | Scale: 1/2" = 1'-0"

Called North

Consultant:

Chippewa County
City/County Building Renovation
325 Court Street
Sault Ste. Marie, MI 49783

Project Title:

Landmark Design Group, P.C.
3900 Linden Ave. S.E. Suite C, Grand Rapids, MI 49548-3406
v: (616) 956-0606

date:	issued for:
04-09-2012	Bids and Permits

Seal:

Project Number:

Landmark Project Number:
10-007

A412

© 2010 Landmark Design Group P.C.

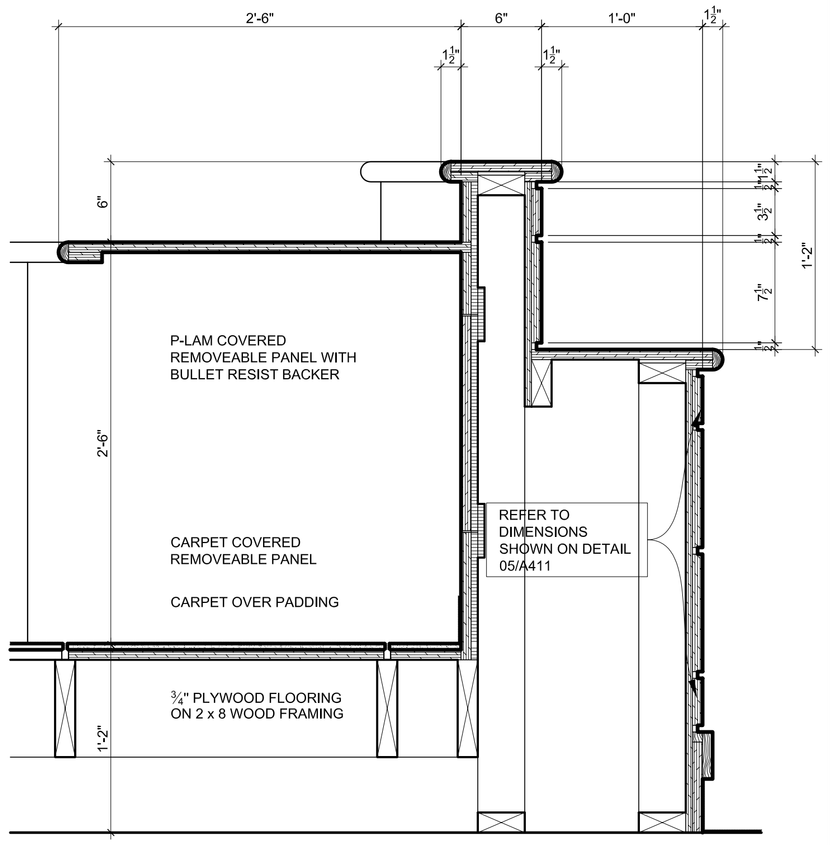

REFER TO MATERIALS LISTED
ON DETAIL 07/A411

Court Room Section	08
Note:	Scale: 1 1/2" = 1'-0"

REFER TO DIMENSIONS
SHOWN ON DETAIL 05/A411

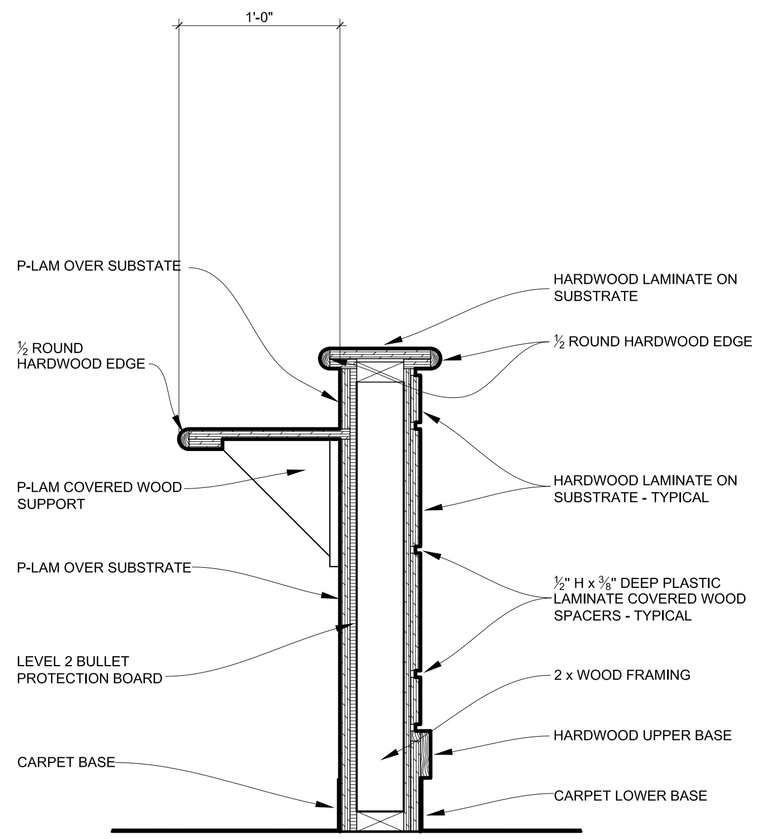

Court Room Section	07
Note:	Scale: 1 1/2" = 1'-0"

REFER TO DIMENSIONS
SHOWN ON DETAIL 05/A411

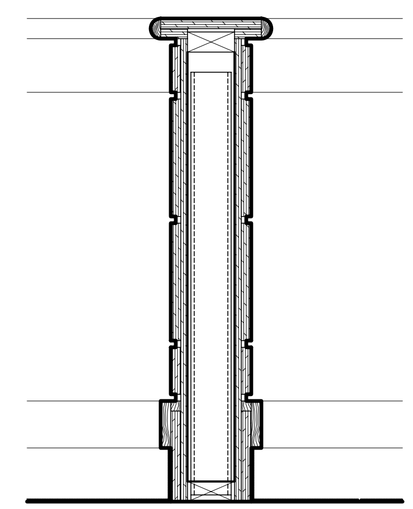

REFER TO MATERIALS LISTED
ON DETAIL 07/A411

Court Room Section	06
Note:	Scale: 1 1/2" = 1'-0"

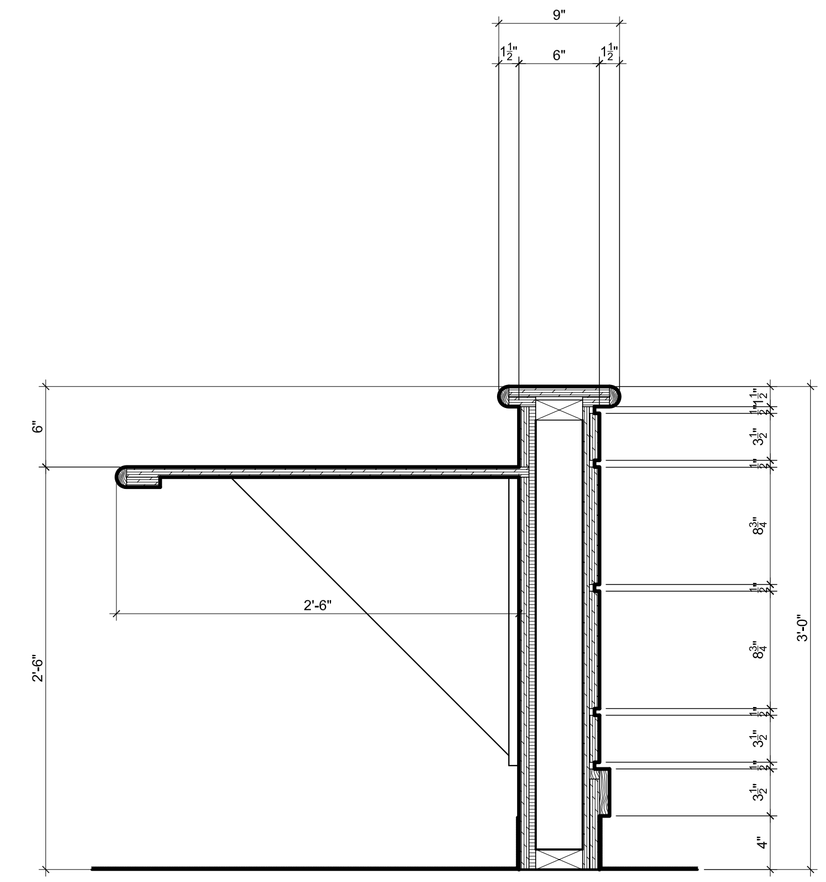

REFER TO MATERIALS LISTED
ON DETAIL 07/A411

Court Room Section	05
Note:	Scale: 1 1/2" = 1'-0"

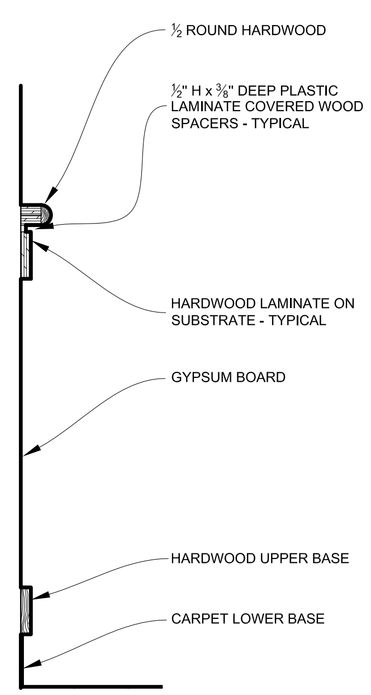

Court Room Section	15
Note:	Scale: 1 1/2" = 1'-0"

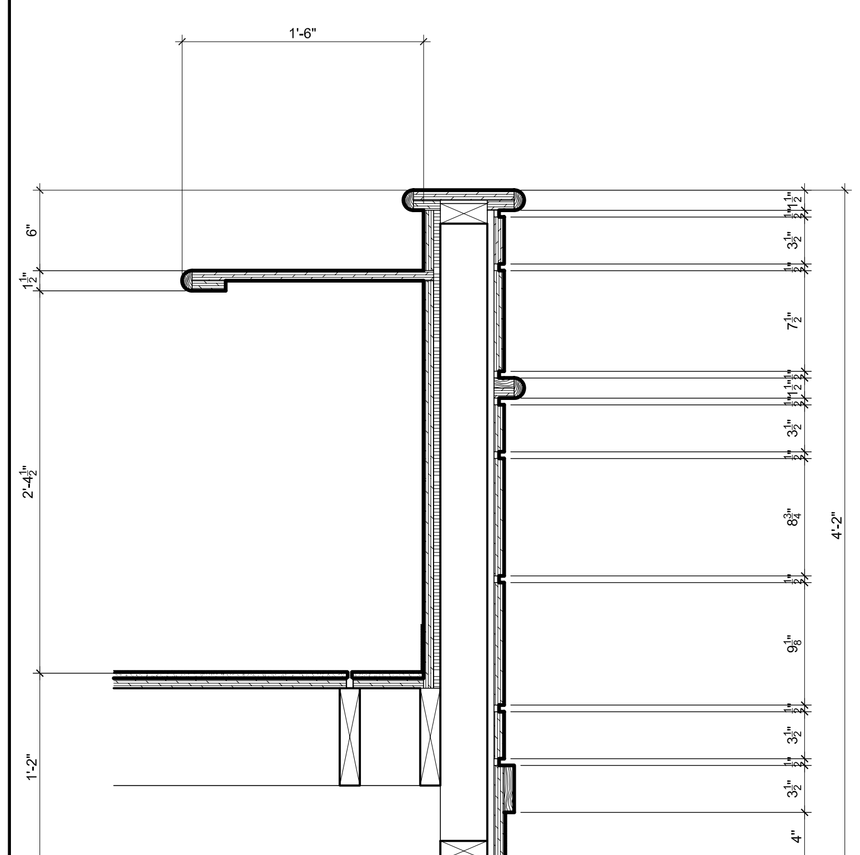

REFER TO MATERIALS LISTED
ON DETAIL 07/A411

Court Room Section	14
Note:	Scale: 1 1/2" = 1'-0"

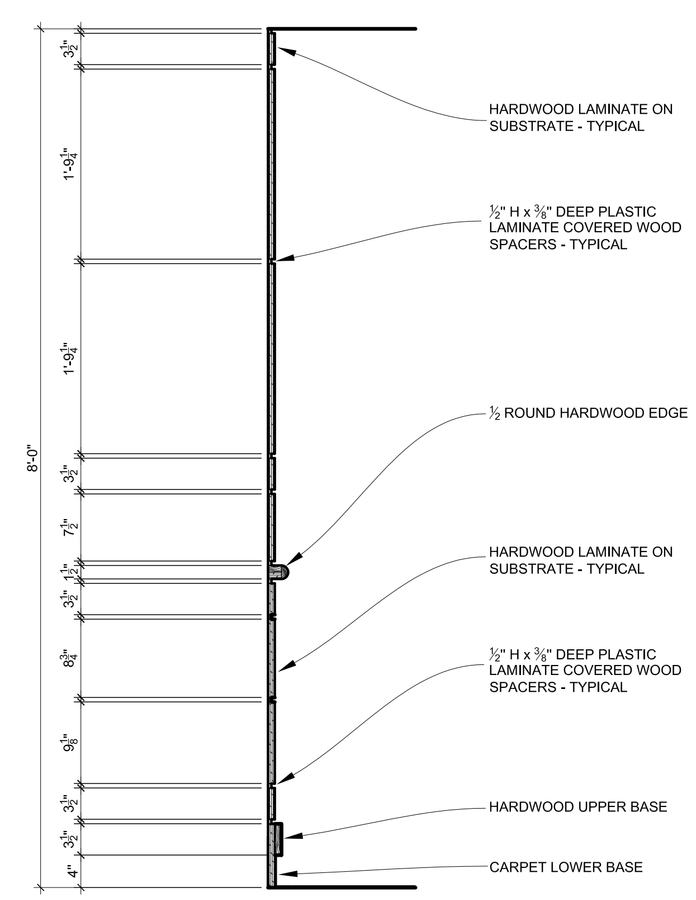

Court Room Section	13
Note:	Scale: 1 1/2" = 1'-0"

Consultant:

Chippewa County
City/County Building Renovation
325 Court Street
Sault Ste. Marie, MI 49783

Project Title:

Landmark Design Group, P.C.
3900 Linden Ave. S.E. Suite C, Grand Rapids, MI 49548-3406
v: (616) 956-0606

issued for:	
date:	04-09-2012
	Bids and Permits

Seal:

Project Number:

Landmark Project Number:
10-007

© 2010 Landmark Design Group P.C.

A411

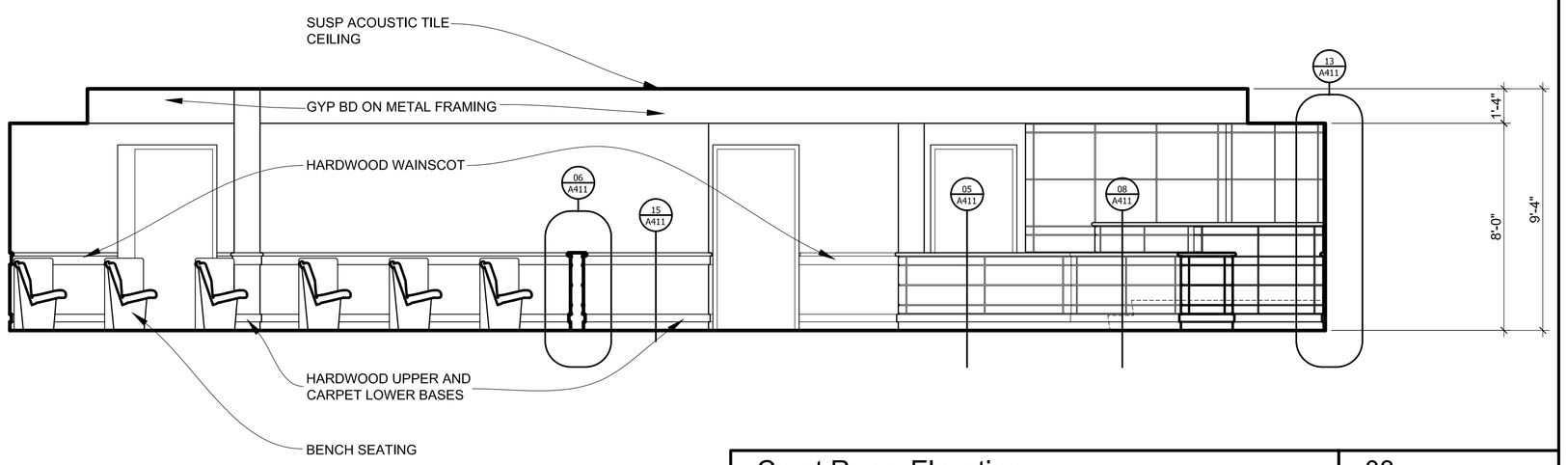

Court Room Elevation	03
Note:	Scale: 1/4" = 1'-0"

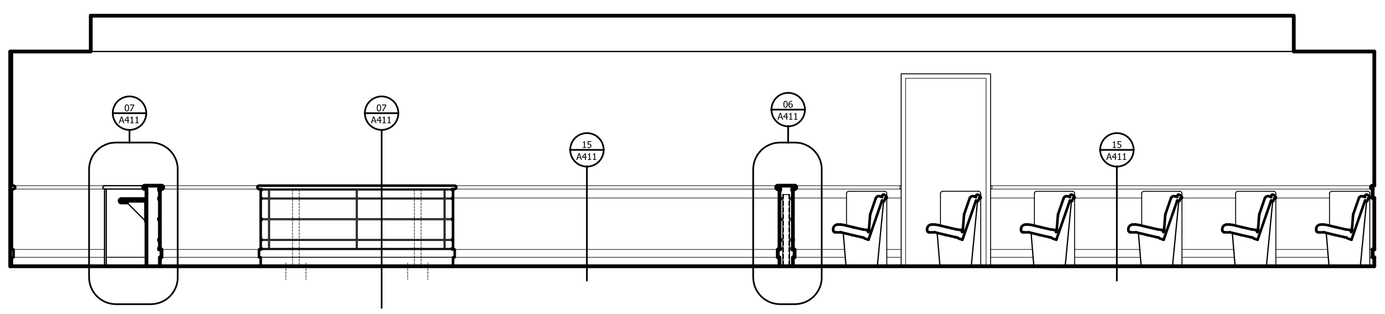

Court Room Elevation	07
Note:	Scale: 1/4" = 1'-0"

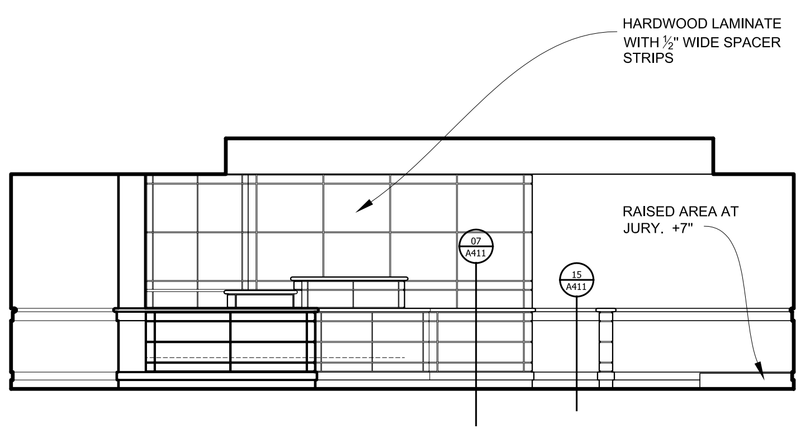

Court Room Elevation	12
Note:	Scale: 1/4" = 1'-0"

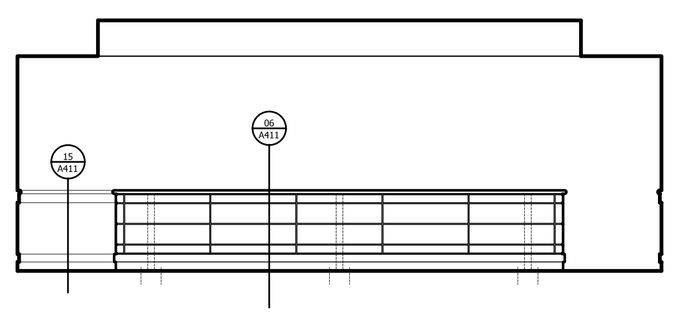

Court Room Elevation	11
Note:	Scale: 1/4" = 1'-0"

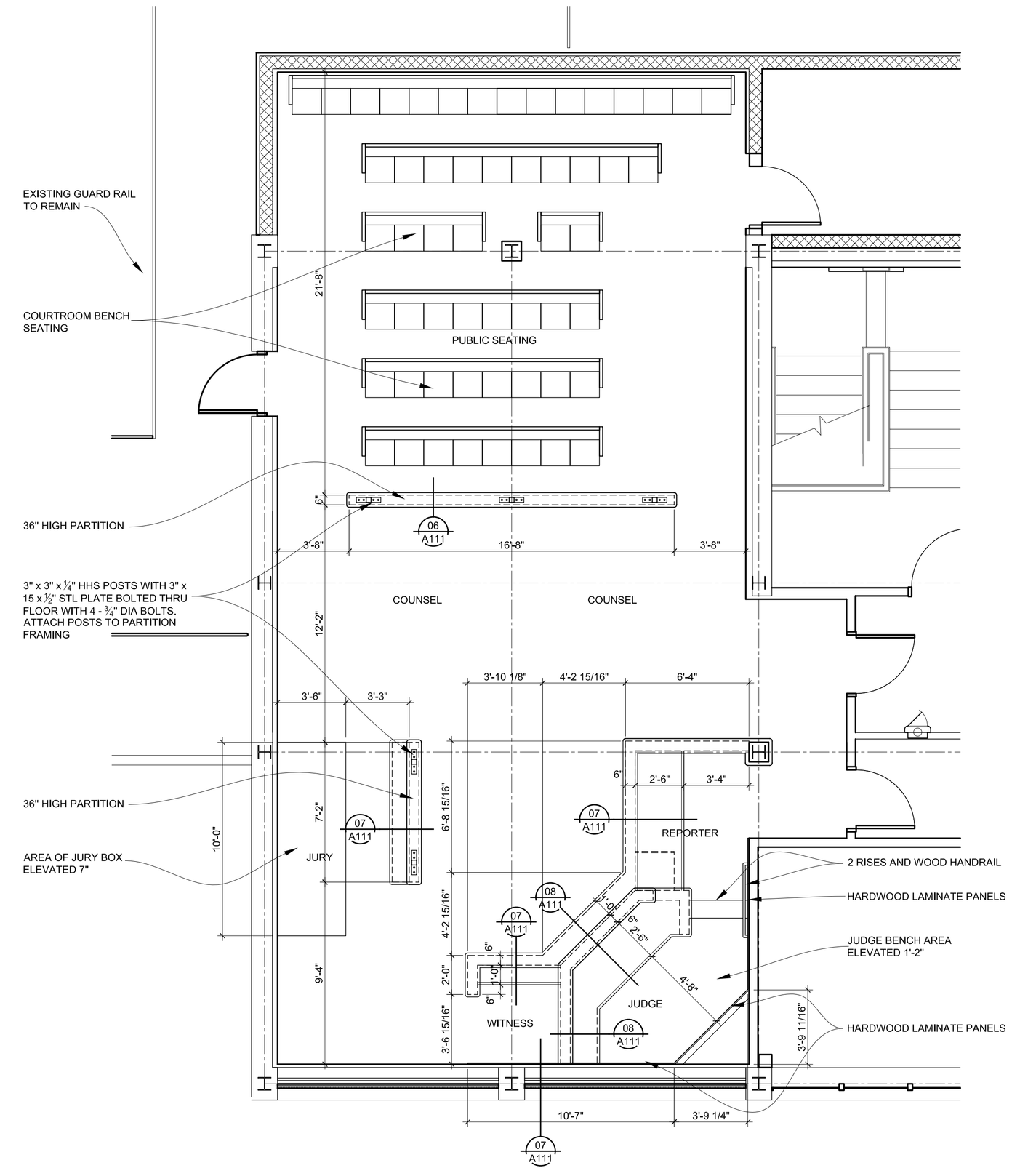

Court Room Plan	Called North	09
Note:		Scale: 1/4" = 1'-0"

Consultant:

Chippewa County
City/County Building Renovation
325 Court Street
Sault Ste. Marie, MI 49783

Project Title:

Landmark Design Group, P.C.
3900 Linden Ave. S.E. Suite C, Grand Rapids, MI 49548-3406
v: (616) 956-0606

date:	issued for:
04-09-2012	Bids and Permits

Seal:

Project Number:

Landmark Project Number:

10-007

© 2010 Landmark Design Group P.C.

A401

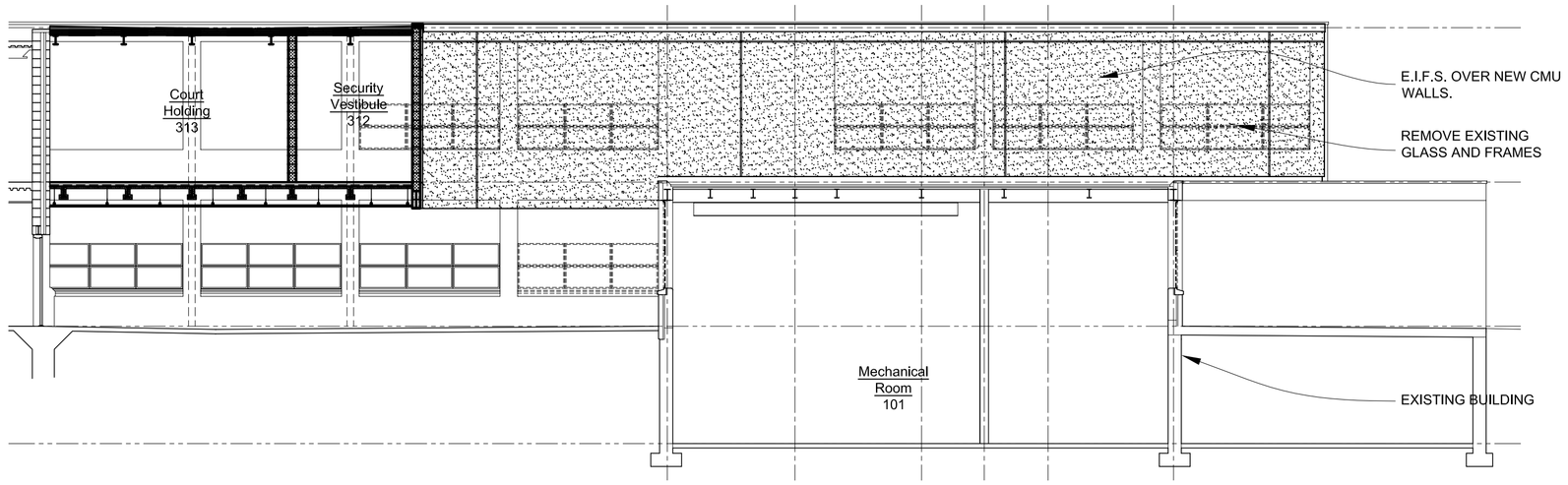

East Elevations And Sections	03
Note:	Scale: 1/8" = 1'-0"

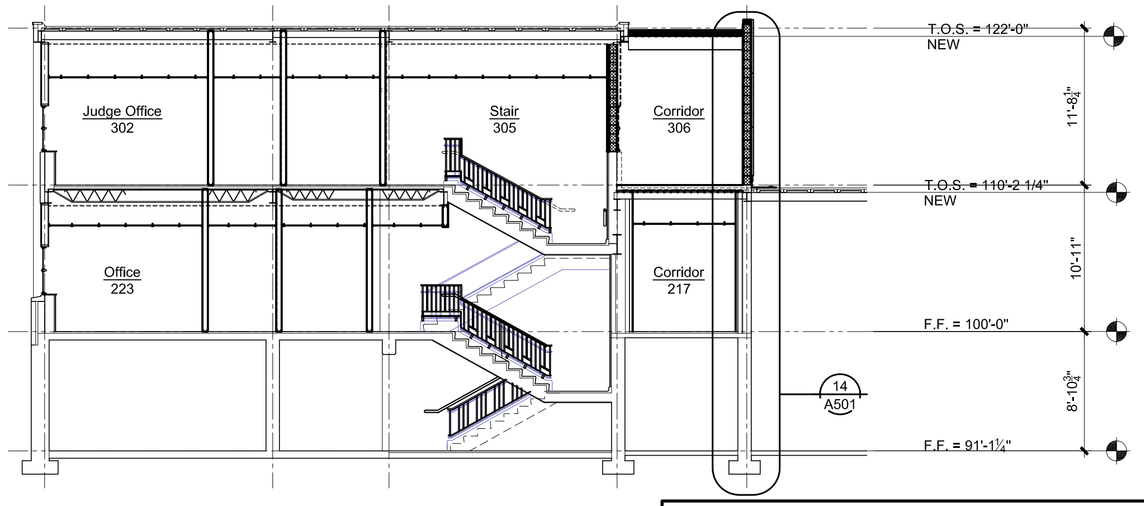

Elevations And Sections	01
Note:	Scale: 1/8" = 1'-0"

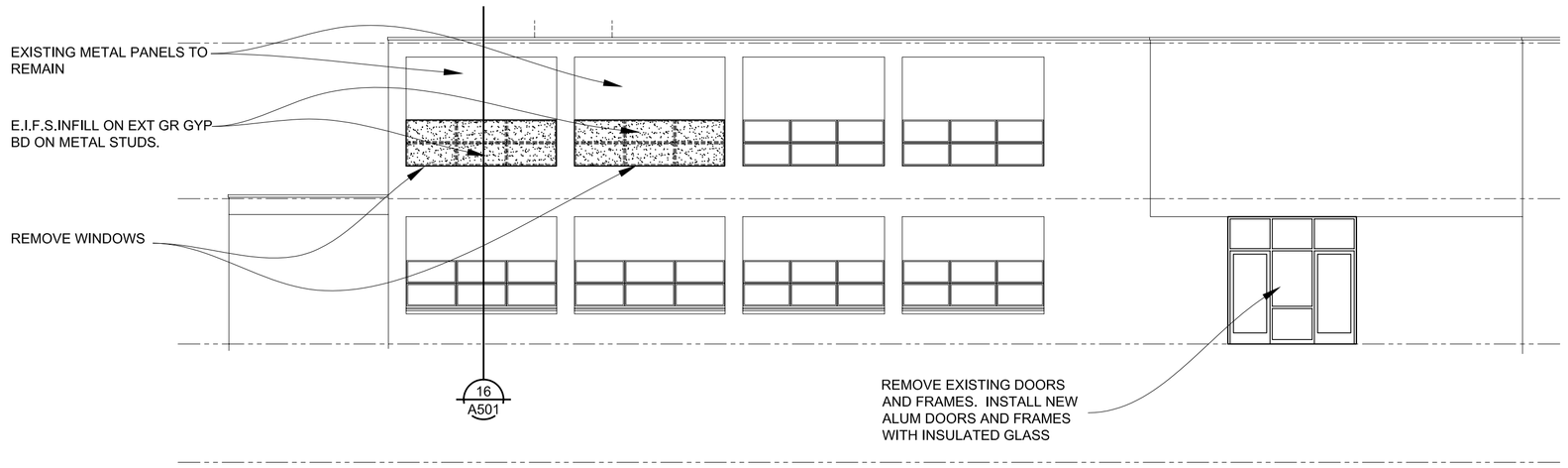

West Elevations And Sections	07
Note:	Scale: 1/8" = 1'-0"

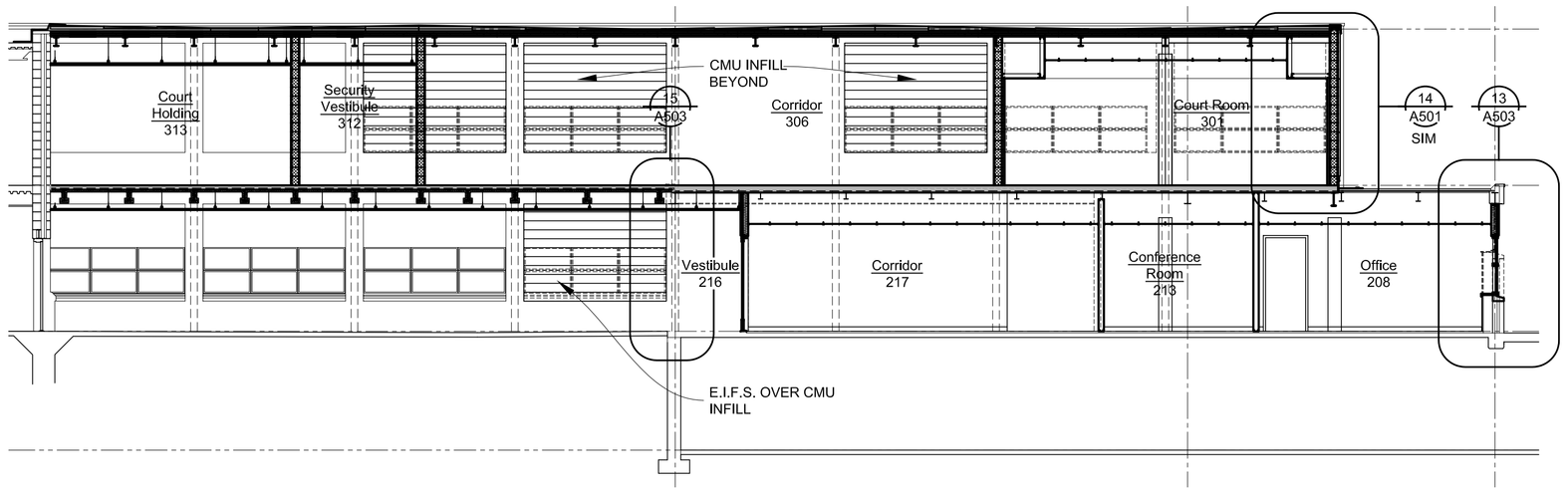

Elevations And Sections	05
Note:	Scale: 1/8" = 1'-0"

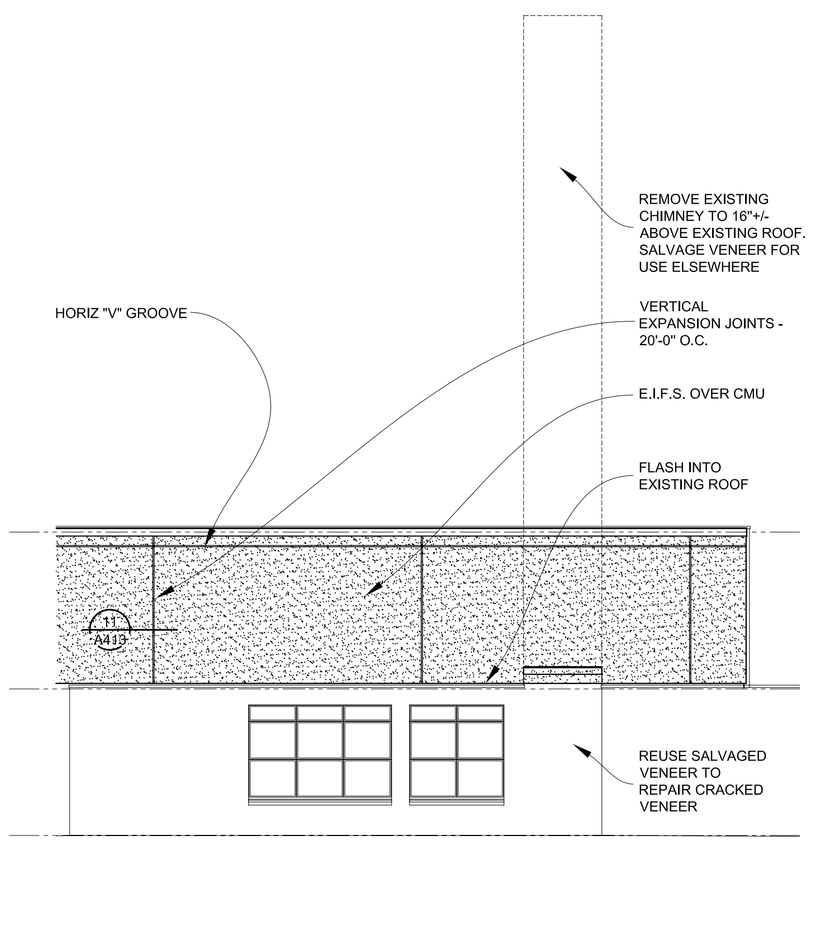

East Elevations And Sections	16
Note:	Scale: 1/8" = 1'-0"

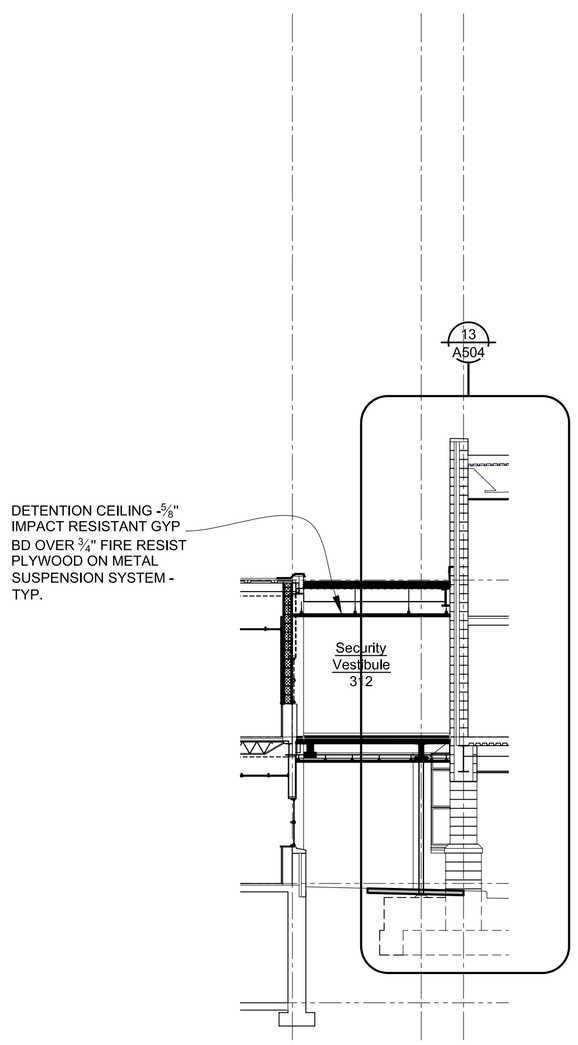

Elevations And Sections	15
Note:	Scale: 1/8" = 1'-0"

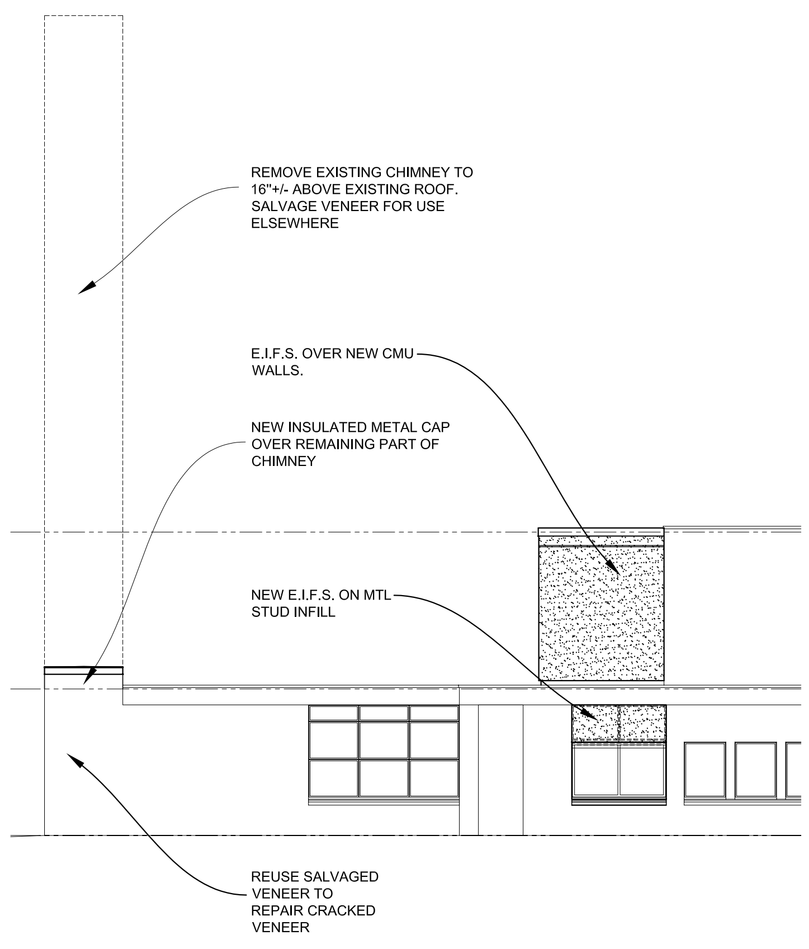

North Elevations And Sections	14
Note:	Scale: 1/8" = 1'-0"

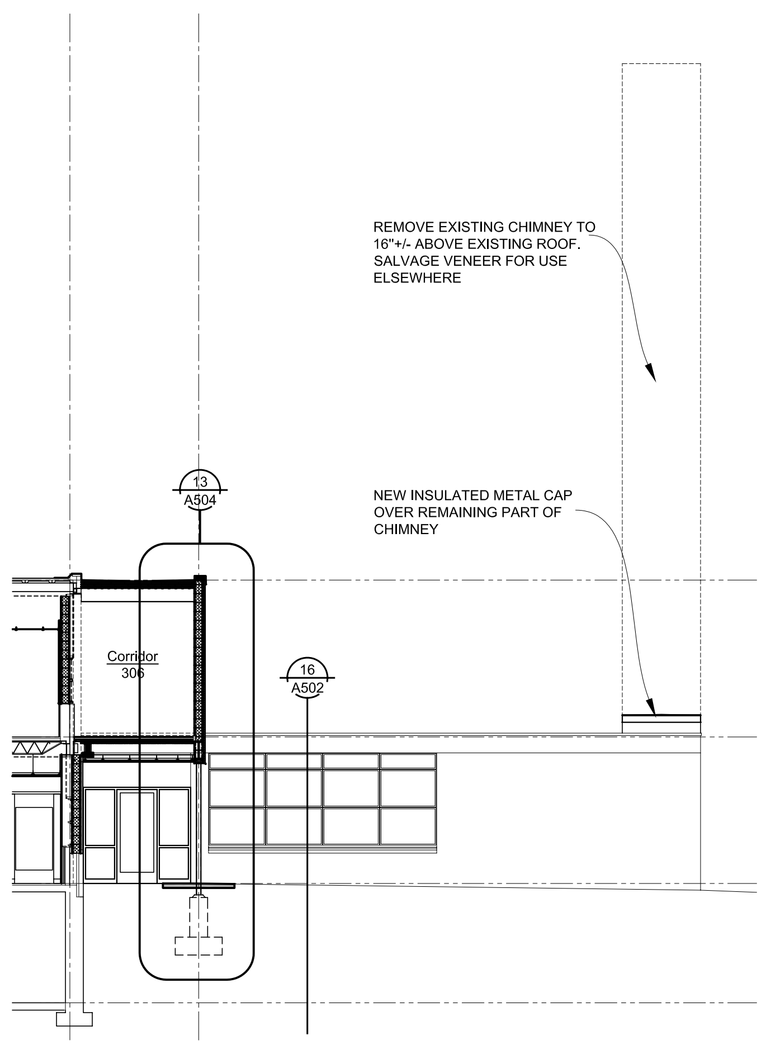

Elevations And Sections	13
Note:	Scale: 1/8" = 1'-0"

Consultant:

Chippewa County
City/County Building Renovation
325 Court Street
Sault Ste. Marie, MI 49783

Project Title:

Landmark Design Group, P.C.
3900 Linden Ave. S.E. Suite C, Grand Rapids, MI 49548-3406
v: (616) 956-0606

date:	issued for:
04-09-2012	Bids and Permits

Seal:

Project Number:

Landmark Project Number:
10-007

© 2010 Landmark Design Group P.C.

A201

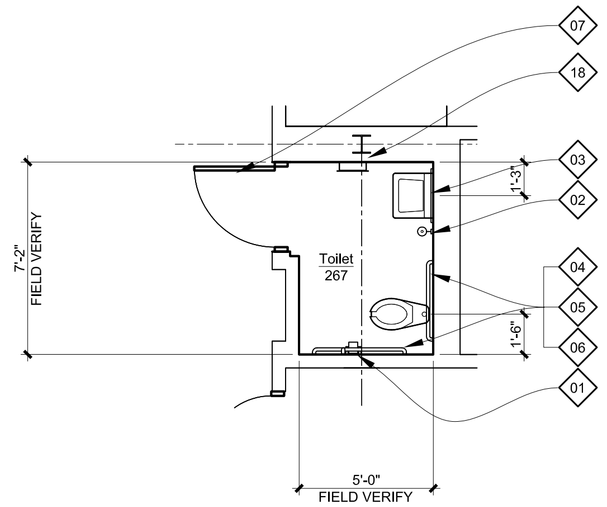

Toilet Room Plans And Plan Details — Called North — 04

Note: — Scale: 1/4" = 1'-0"

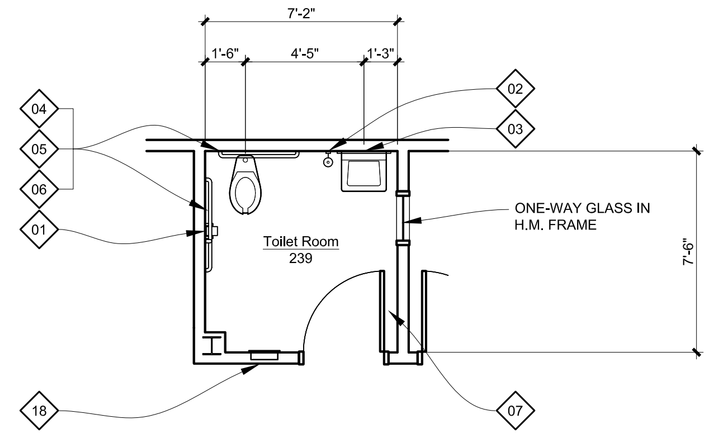

Toilet Room Plans And Plan Details — Called North — 03

Note: — Scale: 1/4" = 1'-0"

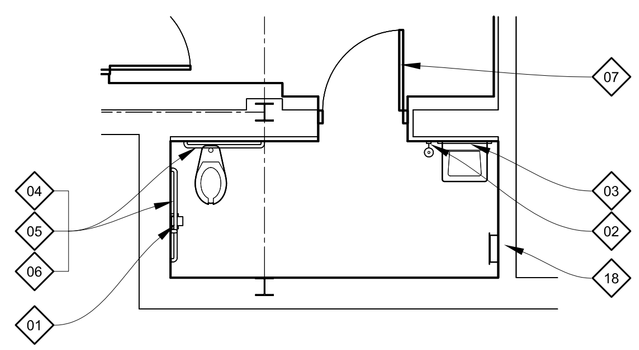

Toilet Room Plans And Plan Details — Called North — 08

Note: — Scale: 1/4" = 1'-0"

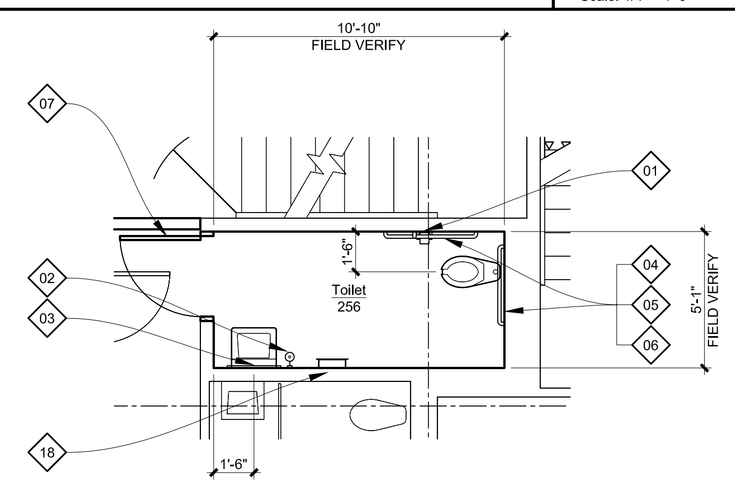

Toilet Room Plans And Plan Details - First Floor — 07

Note: — Scale: 1/4" = 1'-0"

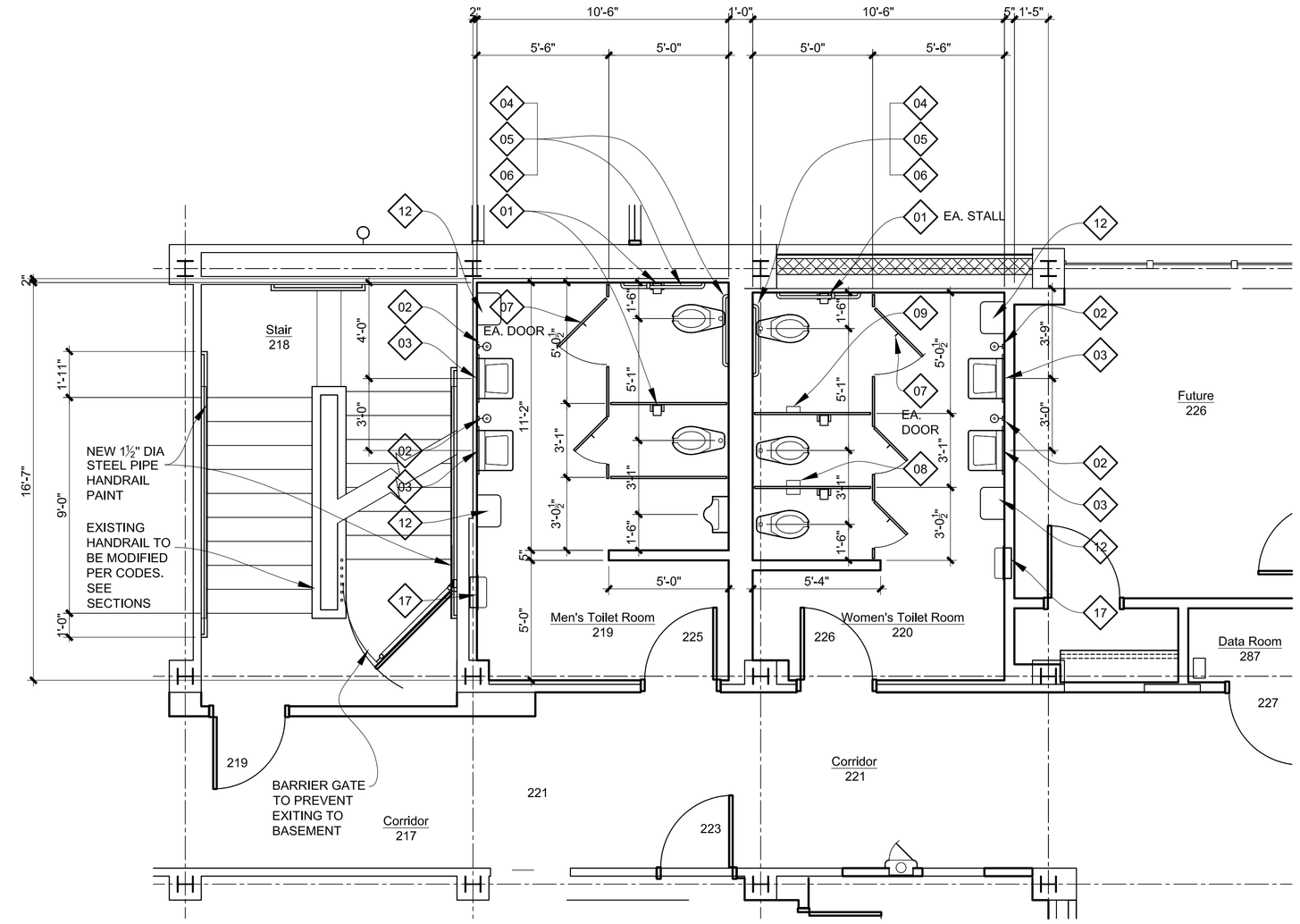

MEN'S TOILET ROOM 219 AND WOMEN'S TOILET ROOM 220

Toilet Room Plans And Plan Details — Called North — 05

Note: — Scale: 1/4" = 1'-0"

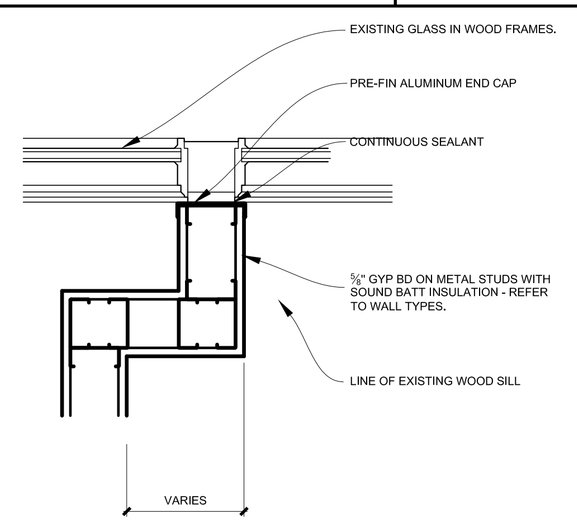

Plan Detail — Called North — 11

Note: — Scale: 1 1/2" = 1'-0"

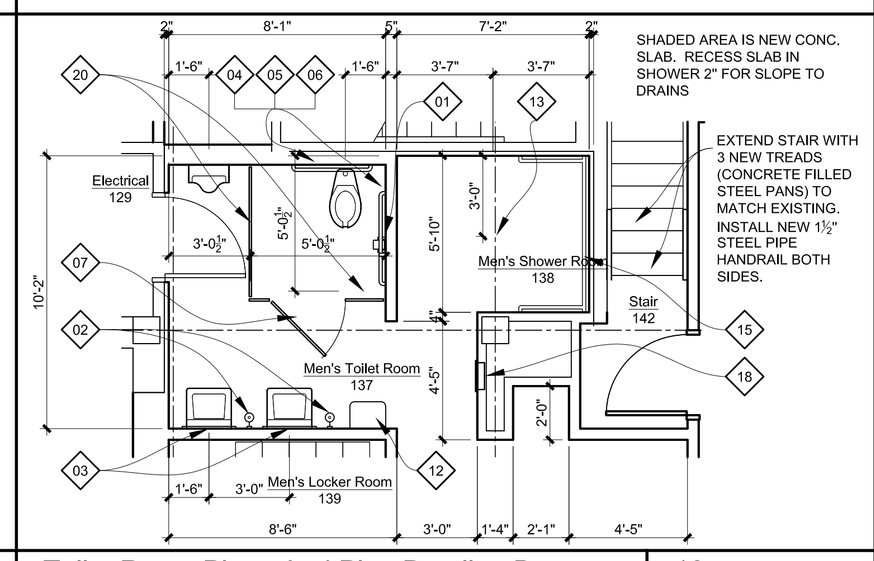

Toilet Room Plans And Plan Details - Basement — 10

Note: — Scale: 1/4" = 1'-0"

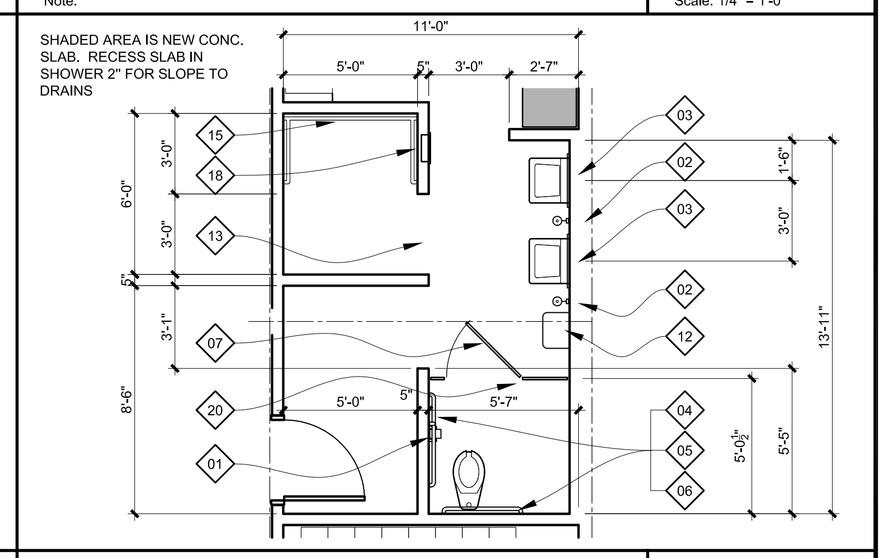

Toilet Room Plans And Plan Details - Basement — 09

Note: — Scale: 1/4" = 1'-0"

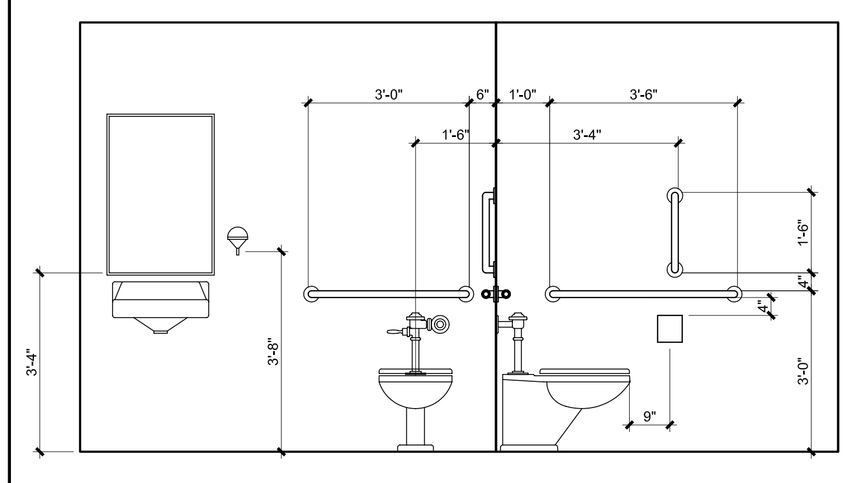

Accessory Mounting Heights — 14

Note: — Scale: 1/2" = 1'-0"

Toilet / Shower Accessories Key

Key	Product	Mounting Height
01	Toilet Tissue Dispenser	Centered 7-9" in front of water closet, 15 - 48" height, 1 1/2" below 12 above grab bar clearance
02	Soap Dispenser - Wall Mounted	40 - 44" spout
03	Framed Mirror	40" bottom
04	42" Grab Bar	36" top
05	18 " Vertical Grab Bar	
06	36" Grab Bar	36" top
07	(2) Robe Hooks	1 at 60", 1 at 40"
08	Napkin Disposal - 2 Sided	30" top
09	Napkin Disposal - 1 Sided	30" top
10	Not Used	
11	Full Length Mirror	4" bottom
12	Electric Hand Dryer	48" max to operator
13	Shower Rod, Curtain, Hooks	6'-0" A.F.F.
14	Fold-up Shower Seat (Barrier Free)	17" to 19" A.F.F.
15	Shower Grab Bar Unit	36" top
16	Baby Changing Station	36" Max to Changing Surface
17	Paper Towel Dispenser - Public	44" to Towel Dispenser Port
18	Paper Towel Dispenser - Staff	44" to Towel Dispenser Port
19	Solid Plastic Shower Partition	
20	Metal Toilet Partition	

Toilet Room Accessories — 13

Note:

Consultant:

Chippewa County
City/County Building Renovation
325 Court Street
Sault Ste. Marie, MI 49783

Project Title:

Landmark Design Group, P.C.
3900 Linden Ave. S.E. Suite C, Grand Rapids, MI 49548-3406
v: (616) 956-0606

date:	issued for:
04-09-2012	Bids and Permits

Seal:

Project Number:

Landmark Project Number: 10-007

© 2010 Landmark Design Group P.C.

A111

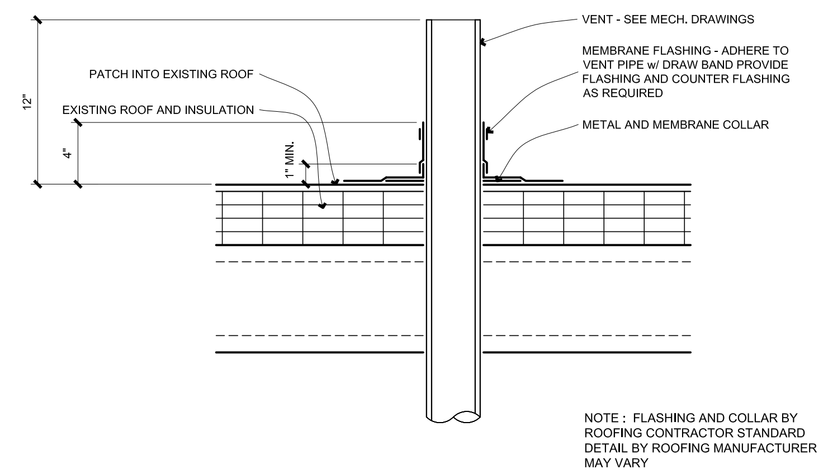

Roof Detail - Vent	03
Note:	Scale: 1 1/2" = 1'-0"

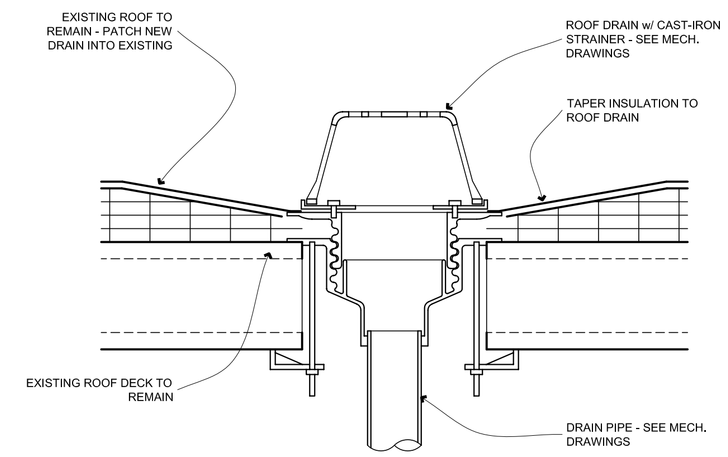

Roof Detail - Roof Drain	02
Note:	Scale: 1 1/2" = 1'-0"

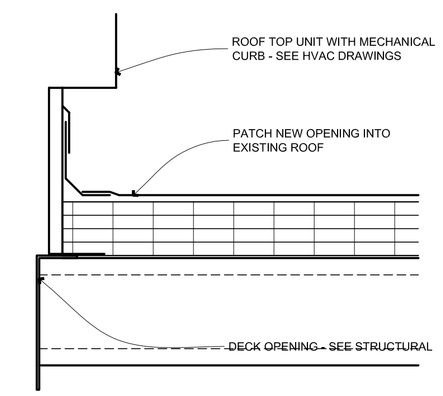

Roof Detail - Equipment curb	01
Note:	Scale: 1 1/2" = 1'-0"

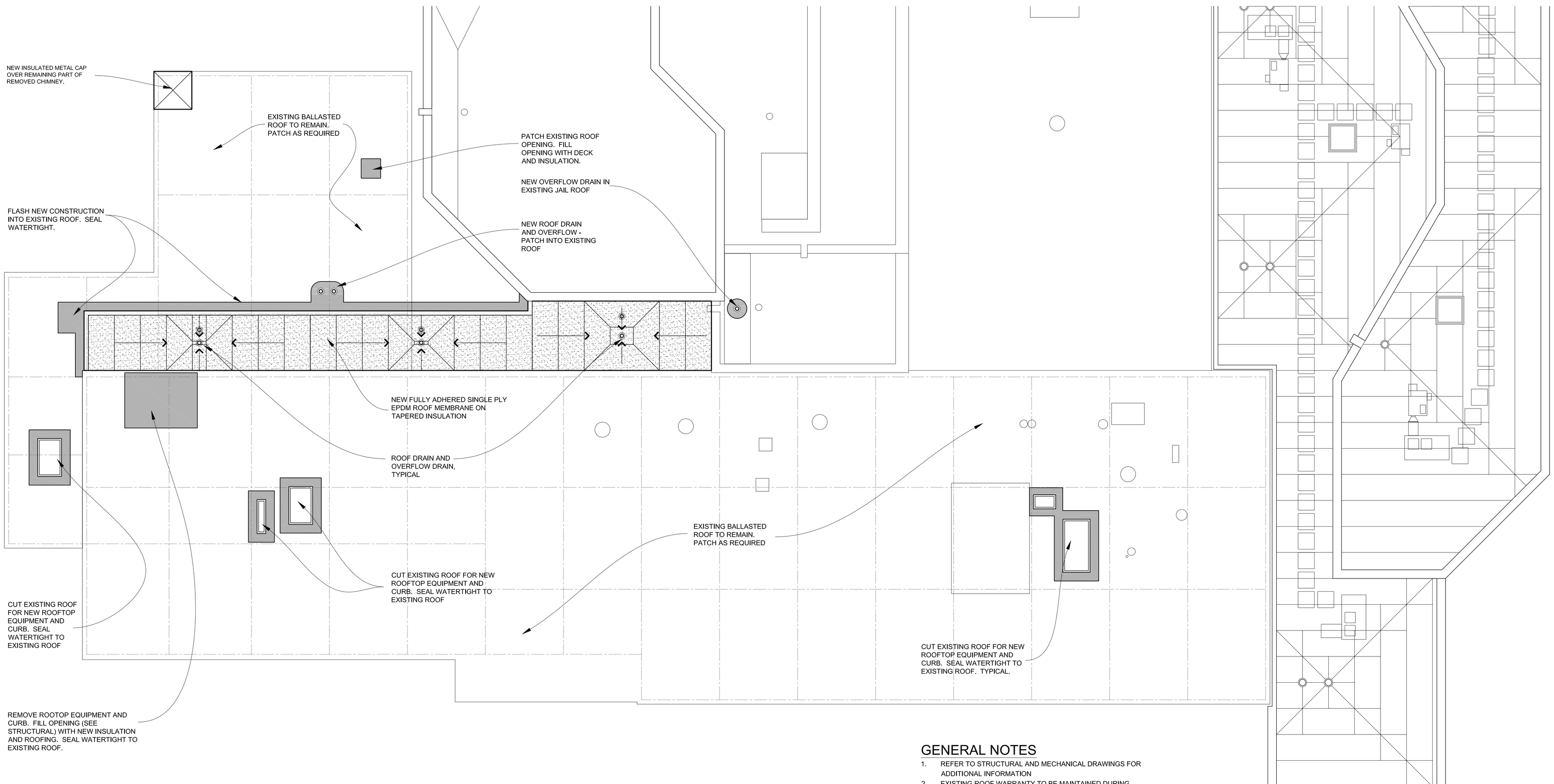

GENERAL NOTES

1. REFER TO STRUCTURAL AND MECHANICAL DRAWINGS FOR ADDITIONAL INFORMATION
2. EXISTING ROOF WARRANTY TO BE MAINTAINED DURING AND AFTER ALL WORK IS COMPLETED.
3. PATCH EXISTING ROOF AS REQUIRED DUE TO RENOVATION OR NEW WORK AND MAKE WATERTIGHT.

Roof Plan	Called North	13
Note:		Scale: 1/8" = 1'-0"

Consultant:

Chippewa County
City/County Building Renovation
325 Court Street
Sault Ste. Marie, MI 49783

Project Title:

Landmark Design Group, P.C.
3900 Linden Ave. S.E. Suite C, Grand Rapids, MI 49548-3406
v: (616) 956-0606

date:	issued for:
04-09-2012	Bids and Permits

Seal:

Project Number:

Landmark Project Number:

10-007

© 2010 Landmark Design Group P.C.

A107

WALL TYPES

4 7/8"

STANDARD STUD WALL - 5/8" GYPSUM BOARD FULL HEIGHT, BOTH SIDES OF 3 5/8" METAL STUDS AT 24" O.C. FROM FLOOR TO FLOOR OR ROOF DECK ABOVE. FILL WITH 3 1/2" SOUND BATT INSULATION. NOMINAL 5" ON DRAWINGS

5 3/8"

STANDARD STUD WALL WITH BULLET PROTECTION BOARD - 5/8" GYPSUM BOARD FULL HEIGHT, BOTH SIDES OF 3 5/8" METAL STUDS AT 24" O.C. WITH LEVEL 2 BULLET PROTECTION BOARD ONE SIDE, FROM FLOOR TO FLOOR OR ROOF DECK ABOVE. FILL WITH 3 1/2" SOUND BATT INSULATION. NOMINAL 5 1/2" ON DRAWINGS

5/8" GYPSUM BOARD ON 1 5/8" METAL FURRING AT 16" O.C.FROM FLOOR TO 6" ABOVE CEILING OVER NEW CMU (OR EXISTING - NO HATCH). AT EXTERIOR WALLS, INSTALL VAPOR BARRIER OVER METAL FURRING.

E.I.F.S. OVER 2" RIGID INSULATION ADHERED TO 8" CMU WITH CONT HORIZ JOINT REINFORCING AT 16" O.C. VERT. REFER TO STRUCTURAL FOR ADDITIONAL REINFORCING AND GROUTING REQUIREMENTS.

SECURITY WALL - 8" CMU GROUTED SOLID (ALL CORES) WITH #5 BARS VERTICAL AT 8" O.C. AND CONT HORIZ JOINT REINFORCING AT 16" O.C. VERT.

1 HOUR WALL - 8" CMU WITH CONT HORIZ JOINT REINFORCING AT 16" O.C. VERT. REFER TO STRUCTURAL FOR ADDITIONAL REINFORCING AND GROUTING REQUIREMENTS. **U/L DES 906**

1 HOUR WALL - 5/8" FIRERATED GYPSUM BOARD FULL HEIGHT, BOTH SIDES OF 3 5/8" OR 6" METAL STUDS AT 24" O.C. FROM FLOOR TO ROOF STRUCTURE ABOVE WITH 3 1/2" SOUND BATT INSULATION. **UL DES U465**

X / X

INTERNAL REINFORCING - SAME AS STUD WALL LISTED ABOVE WITH 8" WIDE X 20 GA. METAL REINFORCING OVER STUDS (1 CENTERED AT 6'-6" A.F.F AND 1 CENTERED AT 5'-2" A.F.F.), FOR FURNITURE (BY OTHERS) SUPPORT. "X" DESIGNATES SIDE OF WALL TO RECEIVE REINFORCING.

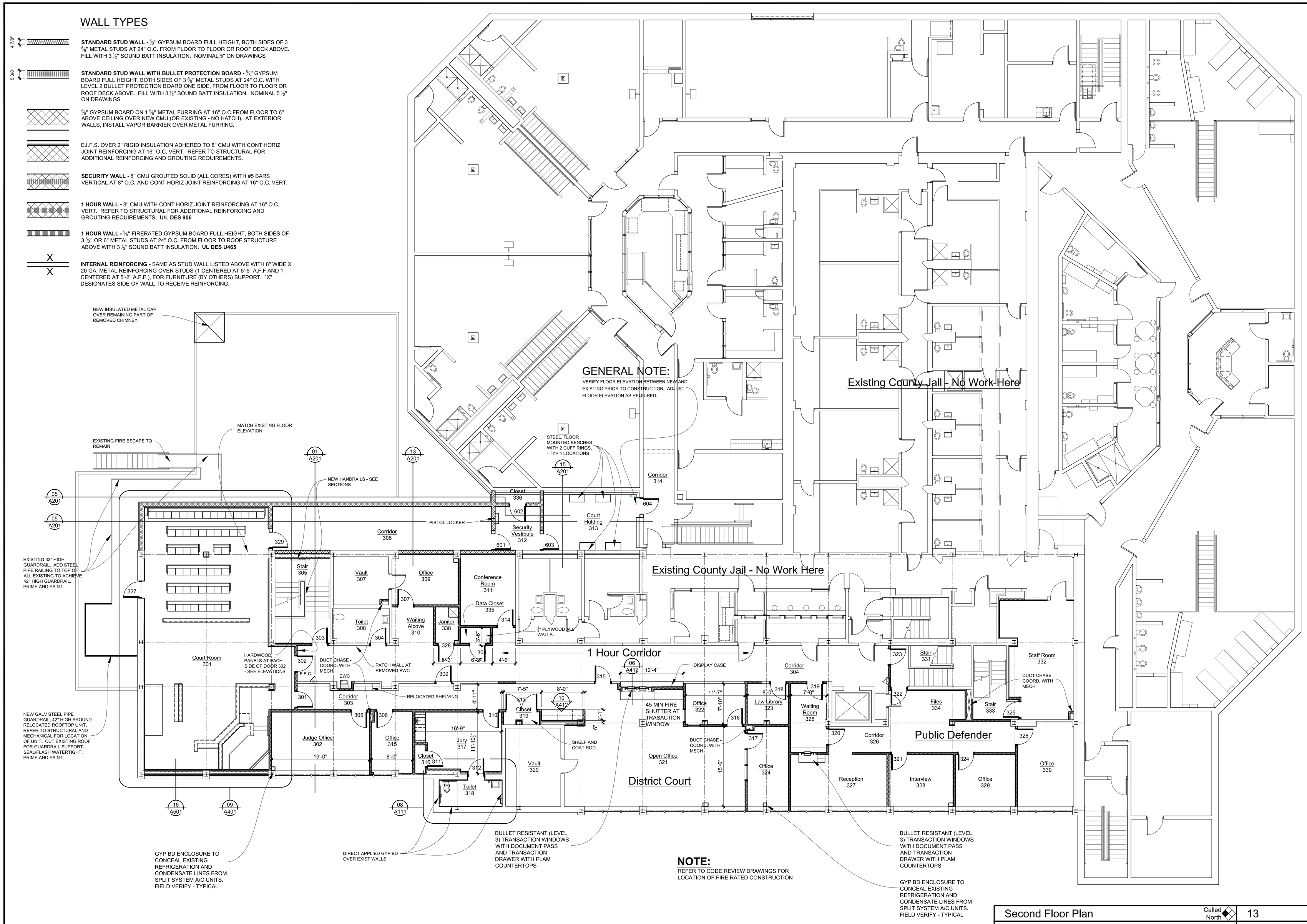

Second Floor Plan — Called North — 13

Note: — Scale: 1/8" = 1'-0"

Consultant:

Chippewa County
City/County Building Renovation
325 Court Street
Sault Ste. Marie, MI 49783

Project Title:

Landmark Design Group, P.C.
3900 Linden Ave. S.E. Suite C, Grand Rapids, MI 49548-3406
v: (616) 956-0606

date:	issued for:
04-09-2012	Bids and Permits

Seal:

Project Number:

Landmark Project Number: 10-007

© 2010 Landmark Design Group P.C.

A106

WALL TYPES

4 7/8"

STANDARD STUD WALL - ⅝" GYPSUM BOARD FULL HEIGHT, BOTH SIDES OF 3 ⅝" METAL STUDS AT 24" O.C. FROM FLOOR TO FLOOR OR ROOF DECK ABOVE. FILL WITH 3 ½" SOUND BATT INSULATION. NOMINAL 5" ON DRAWINGS

5 3/8"

STANDARD STUD WALL WITH BULLET PROTECTION BOARD - ⅝" GYPSUM BOARD FULL HEIGHT, BOTH SIDES OF 3 ⅝" METAL STUDS AT 24" O.C. WITH LEVEL 2 BULLET PROTECTION BOARD ONE SIDE, FROM FLOOR TO FLOOR OR ROOF DECK ABOVE. FILL WITH 3 ½" SOUND BATT INSULATION. NOMINAL 5 ½" ON DRAWINGS

⅝" GYPSUM BOARD ON 1 ⅝" METAL FURRING AT 16" O.C.FROM FLOOR TO 8" ABOVE CEILING OVER NEW CMU (OR EXISTING - NO HATCH). AT EXTERIOR WALLS, INSTALL VAPOR BARRIER OVER METAL FURRING.

E.I.F.S. OVER 2" RIGID INSULATION ADHERED TO 8" CMU WITH CONT HORIZ JOINT REINFORCING AT 16" O.C. VERT. REFER TO STRUCTURAL FOR ADDITIONAL REINFORCING AND GROUTING REQUIREMENTS.

SECURITY WALL - 8" CMU GROUTED SOLID (ALL CORES) WITH #5 BARS VERTICAL AT 8" O.C. AND CONT HORIZ JOINT REINFORCING AT 16" O.C. VERT.

1 HOUR WALL - 8" CMU WITH CONT HORIZ JOINT REINFORCING AT 16" O.C. VERT. REFER TO STRUCTURAL FOR ADDITIONAL REINFORCING AND GROUTING REQUIREMENTS. **U/L DES 906**

1 HOUR WALL - ⅝" FIRERATED GYPSUM BOARD FULL HEIGHT, BOTH SIDES OF 3 ⅝" OR 6" METAL STUDS AT 24" O.C. FROM FLOOR TO ROOF STRUCTURE ABOVE WITH 3 ½" SOUND BATT INSULATION. **UL DES U465**

X
X

INTERNAL REINFORCING - SAME AS STUD WALL LISTED ABOVE WITH 8" WIDE X 20 GA. METAL REINFORCING OVER STUDS (1 CENTERED AT 6'-6" A.F.F AND 1 CENTERED AT 5'-2" A.F.F.), FOR FURNITURE (BY OTHERS) SUPPORT. "X" DESIGNATES SIDE OF WALL TO RECEIVE REINFORCING.

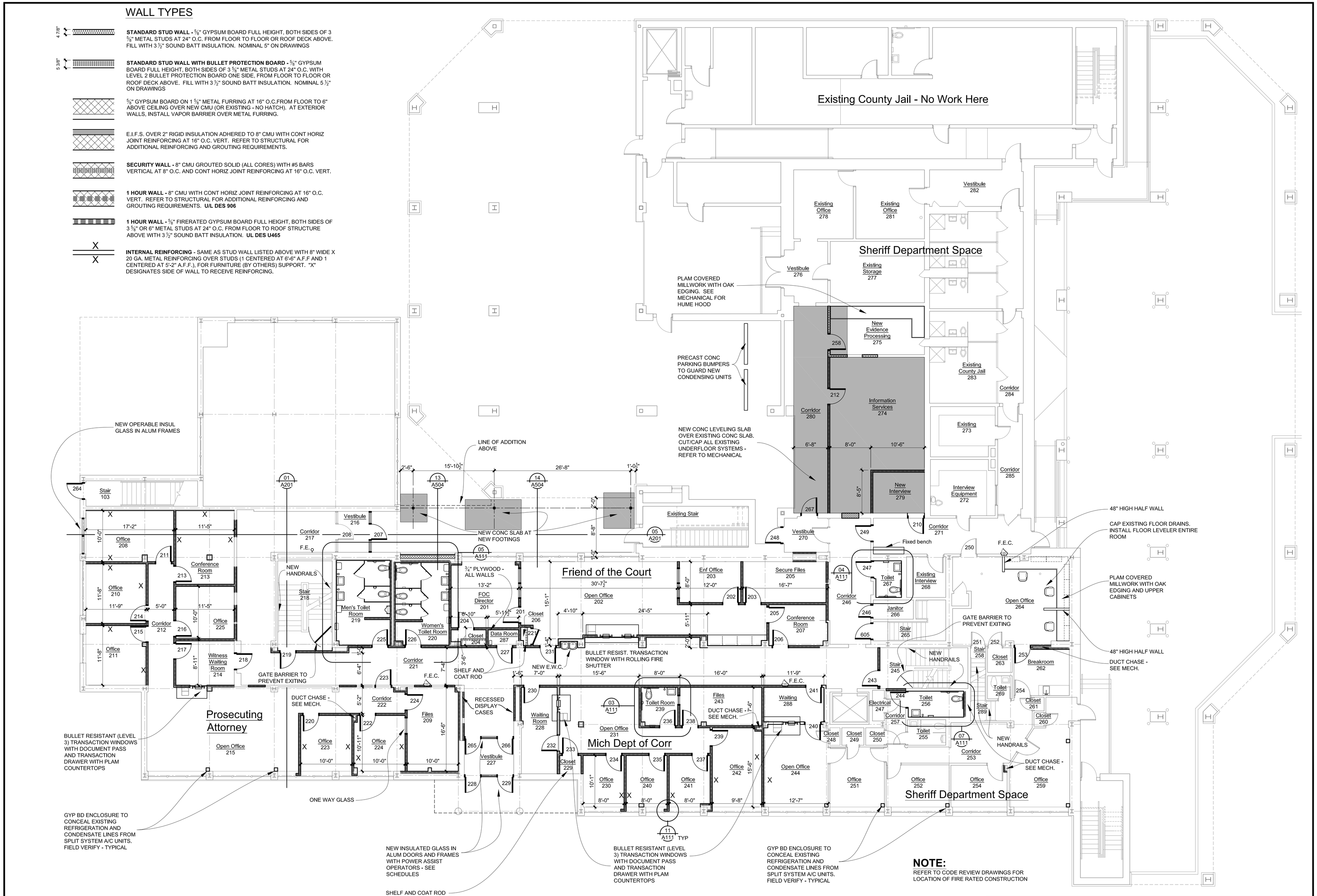

First Floor Plan

Called North

13

Note:

Scale: 1/8" = 1'-0"

Consultant:

Chippewa County
City/County Building Renovation
325 Court Street
Sault Ste. Marie, MI 49783

Project Title:

Landmark Design Group, P.C.
3900 Linden Ave. S.E. Suite C, Grand Rapids, MI 49548-3406
v: (616) 956-0606

date:	issued for:
04-09-2012	Bids and Permits

Seal:

Project Number:

Landmark Project Number:

10-007

A105

© 2010 Landmark Design Group P.C.

WALL TYPES

4 7/8"

STANDARD STUD WALL - 5/8" GYPSUM BOARD FULL HEIGHT, BOTH SIDES OF 3 5/8" METAL STUDS AT 24" O.C. FROM FLOOR TO FLOOR OR ROOF DECK ABOVE. FILL WITH 3 1/2" SOUND BATT INSULATION. NOMINAL 5" ON DRAWINGS

5 3/8"

STANDARD STUD WALL WITH BULLET PROTECTION BOARD - 5/8" GYPSUM BOARD FULL HEIGHT, BOTH SIDES OF 3 5/8" METAL STUDS AT 24" O.C. WITH LEVEL 2 BULLET PROTECTION BOARD ONE SIDE, FROM FLOOR TO FLOOR OR ROOF DECK ABOVE. FILL WITH 3 1/2" SOUND BATT INSULATION. NOMINAL 5 1/2" ON DRAWINGS

5/8" GYPSUM BOARD ON 1 5/8" METAL FURRING AT 16" O.C.FROM FLOOR TO 6" ABOVE CEILING OVER NEW CMU (OR EXISTING - NO HATCH). AT EXTERIOR WALLS, INSTALL VAPOR BARRIER OVER METAL FURRING.

E.I.F.S. OVER 2" RIGID INSULATION ADHERED TO 8" CMU WITH CONT HORIZ JOINT REINFORCING AT 16" O.C. VERT. REFER TO STRUCTURAL FOR ADDITIONAL REINFORCING AND GROUTING REQUIREMENTS.

SECURITY WALL - 8" CMU GROUTED SOLID (ALL CORES) WITH #5 BARS VERTICAL AT 8" O.C. AND CONT HORIZ JOINT REINFORCING AT 16" O.C. VERT.

1 HOUR WALL - 8" CMU WITH CONT HORIZ JOINT REINFORCING AT 16" O.C. VERT. REFER TO STRUCTURAL FOR ADDITIONAL REINFORCING AND GROUTING REQUIREMENTS. **U/L DES 906**

1 HOUR WALL - 5/8" FIRERATED GYPSUM BOARD FULL HEIGHT, BOTH SIDES OF 3 5/8" OR 6" METAL STUDS AT 24" O.C. FROM FLOOR TO ROOF STRUCTURE ABOVE WITH 3 1/2" SOUND BATT INSULATION. **UL DES U465**

X
X

INTERNAL REINFORCING - SAME AS STUD WALL LISTED ABOVE WITH 8" WIDE X 20 GA. METAL REINFORCING OVER STUDS (1 CENTERED AT 6'-6" A.F.F AND 1 CENTERED AT 5'-2" A.F.F.), FOR FURNITURE (BY OTHERS) SUPPORT. "X" DESIGNATES SIDE OF WALL TO RECEIVE REINFORCING.

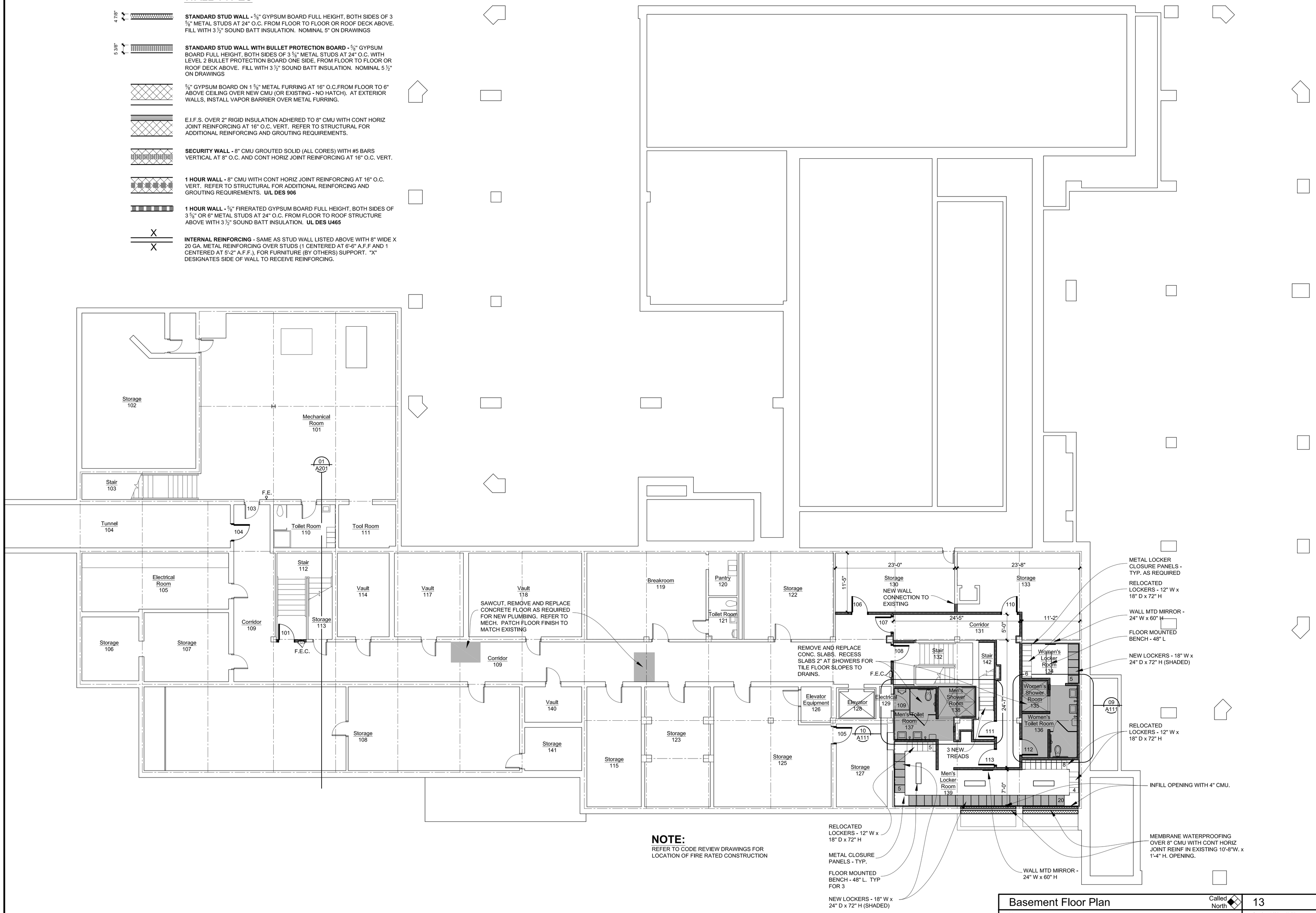

NOTE:
REFER TO CODE REVIEW DRAWINGS FOR LOCATION OF FIRE RATED CONSTRUCTION

Basement Floor Plan — Called North — 13
Note:
Scale: 1/8" = 1'-0"

Consultant:

Chippewa County
City/County Building Renovation
325 Court Street
Sault Ste. Marie, MI 49783

Project Title:

Landmark Design Group, P.C.
3900 Linden Ave. S.E. Suite C, Grand Rapids, MI 49548-3406
v: (616) 956-0606

date:	issued for:
04-09-2012	Bids and Permits

Seal:

Project Number:

Landmark Project Number: 10-007

© 2010 Landmark Design Group P.C.

A104

Demolition Notes – Second Floor

1 Remove masonry chimney to 16'' above existing roof. Salvage veneer for re-use elsewhere.
2 Remove handrails.
3 Remove masonry for installation of door and frame. Remove more masonry than required for the finished opening for installation of new bullnose block. Shore and brace as required for new lintels - refer to structural.
4 Remove roofing and concrete deck. Shore and brace as required for new roof framing – refer to structural.
5 Remove plaster ceiling as required to support new suspended ceilings – typical all areas to receive new ceilings.
6 Remove masonry wall.
7 Remove stud wall.
8 Remove door and frame.
9 Remove glass and frames.
10 Remove masonry below existing opening for new addition. Refer to elevations.
11 Remove millwork.
12 Remove plumbing fixtures (lavatories, water closets, water coolers, etc.). Refer to mechanical and electrical demolition drawings for additional requirements.
13 Remove terrazzo cove base.
14 Remove entire plaster ceiling and framing above Courtroom
15 Remove plaster ceiling and framing above corridor
16 Remove guardrail.
17 Remove raised floor and ½ wall.
18 Remove courtroom seating.
19 Remove fire shutter.
20 Remove shelving for re-use elsewhere.

General Demolition Notes:

The demolition drawings are intended to indicate the bounds of work required. It is not expected that every item will be specifically called out in the documents. Contractor shall provide all demolition required for new construction regardless if shown on drawings or not.

Patch and repair existing construction as required due to demolition. Patch to match adjacent finish.

Refer to mechanical and electrical drawings for mechanical and electrical demolition information. Refer to mechanical and electrical drawings for work to be built-in to existing building and therefore requiring demolition. Refer to mechanical and electrical drawings for piping, conduits, ductwork and other equipment and items that are built-in or pass through existing walls, roof, floor or other existing items and require demolition. Provide required work.

Refer to wall sections for additional demolition information

Contractor shall take precautions and provide any shoring and bracing of existing bearing walls required. Use appropriate precautions at those areas. Refer to additional information on structural drawings.

Tooth in masonry when closing openings in walls where masonry remains exposed. At concealed locations anchor infill at jambs.

Remove existing floor finishes and base, strip flooring, base and adhesives, in areas scheduled to receive new floor finishes. Remove ceilings in areas to receive new ceilings – refer to floor finish plans and reflected ceiling plans.

Remove bullnosed block jambs at locations of door removal where opening is scheduled to be closed, tooth in new masonry.

At block walls to receive new frames less than the thickness of the wall remove additional block at jambs to allow for toothing-in of bullnose block at jambs

For concrete walls, saw cut openings as required for new frames. Use precautions to cut accurately to frame size – do not over-cut.

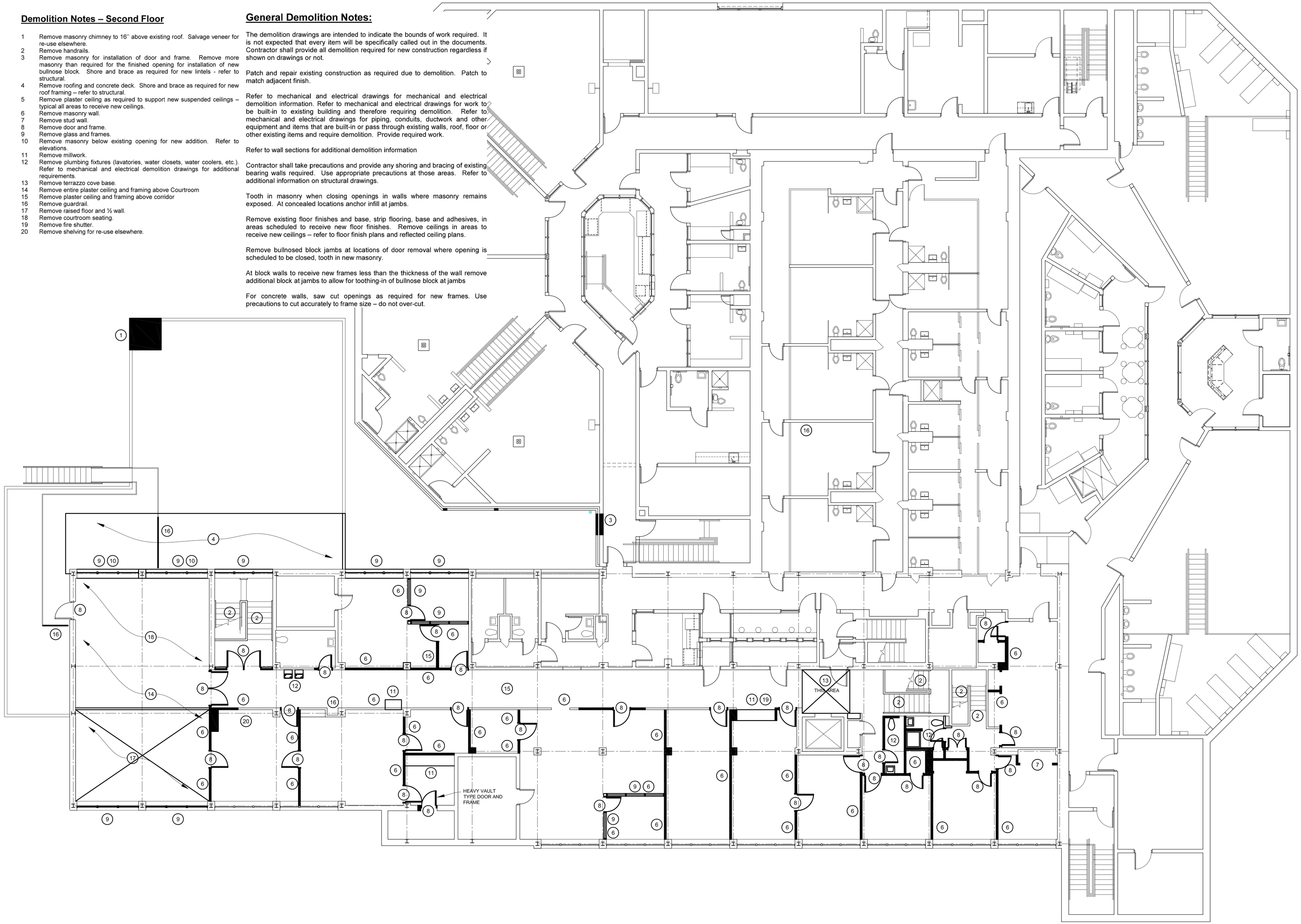

Second Floor Demolition Plan

Called North

13

Note:

Scale: 1/8" = 1'-0"

Consultant:

Chippewa County
City/County Building Renovation
325 Court Street
Sault Ste. Marie, MI 49783

Project Title:

Landmark Design Group, P.C.
3900 Linden Ave. S.E. Suite C, Grand Rapids, MI 49548-3406
v: (616) 956-0606

date:	issued for:
04-09-2012	Bids and Permits

Seal:

Project Number:

Landmark Project Number:

10-007

A103

© 2010 Landmark Design Group P.C.

Demolition Notes – First Floor

1 Remove masonry chimney. Salvage veneer for re-use elsewhere.
2 Remove handrails.
3 Remove masonry for installation of door and frame. Remove more masonry than required for the firished opening for installation of new bullnose block. Shore and brace as required for new lintels - refer to structural.
4 Remove masonry exterior wall for installation of new glass and frames. Remove enough masonry veneer for construction of new jambs. Shore and brace as required for new lintels – refer to structural.
5 Remove masonry wall.
6 Remove stud wall.
7 Remove door and frame.
8 Remove glass and frames.
9 Remove part of masonry below existing opening for new glazing. Refer to elevations.
10 Remove millwork and cabinets.
11 Remove plumbing fixtures (lavatories, water closets, water coolers, etc.). Refer to mechanical and electrical demolition drawings for additional requirements.
12 Remove floor finishes.
13 Remove ceiling finishes.
14 Remove terrazzo cove base.
15 Remove detention glass and frames.
16 Remove detention door and frame.
17 Remove steel detention – door, frames and grating.
18 Remove plaster ceiling and framing at underside of existing floor joists – typical all corridors.
19 Remove reinforced concrete walls.
20 Remove roll-up fire grille.
21 Remove and relocate fire hose cabinet.
22 Remove concrete floor.
23 Remove concrete benches.
24 Remove tile flooring
25 Remove tile flooring, tile wainscot and toilet partitions
26 Remove plaster ceiling at underside of floor joist as required for support of new suspended ceilings, mechanical equipment, electrical equipment, etc.

General Demolition Notes:

The demolition drawings are intended to indicate the bounds of work required. It is not expected that every item will be specifically called out in the documents. Contractor shall provide all demolition recuired for new construction regardless if shown on drawings or not.

Patch and repair existing construction as required due to demolition. Patch to match adjacent finish.

Refer to mechanical and electrical drawings for mechanical and electrical demolition information. Refer to mechanical and electrical drawings for work to be built-in to existing building and therefore requiring demolition. Refer to mechanical and electrical drawings for piping, conduits, ductwork and other equipment and items that are built-in or pass through existing walls, roof, floor or other existing items and require demolition. Provide required work.

Refer to wall sections for additional demolition information

Contractor shall take precautions and provide any shoring and bracing of existing bearing walls required. Use appropriate precautions at those areas. Refer to additional information on structural drawings.

Tooth in masonry when closing openings in walls where masonry remains exposed. At concealed locations anchor infill at jambs.

Remove existing floor finishes and base, strip flooring, base and adhesives, in areas scheduled to receive new floor finishes. Remove ceilings in areas to receive new ceilings – refer to floor finish plans and reflected ceiling plans.

Remove bullnosed block jambs at locations of door removal where opening is scheduled to be closed, tooth in new masonry.

At block walls to receive new frames less than the thickness of the wall remove additional block at jambs to allow for toothing-in of bullnose block at jambs

For concrete walls, saw cut openings as required for new frames. Use precautions to cut accurately to frame size – do not over-cut.

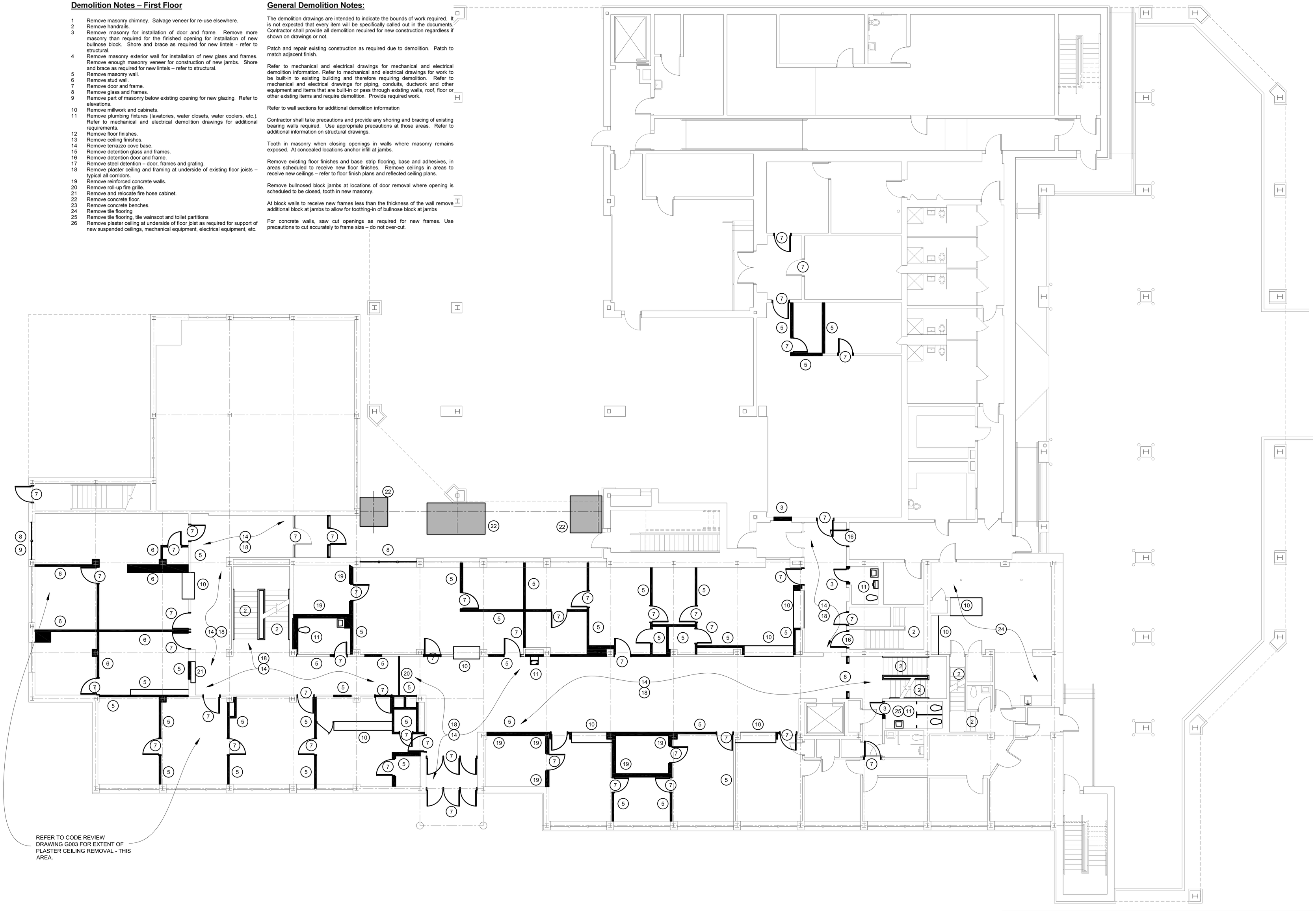

First Floor Demolition Plan

Called North

13

Note:

Scale: 1/8" = 1'-0"

Consultant:

Chippewa County
City/County Building Renovation
325 Court Street
Sault Ste. Marie, MI 49783

Project Title:

Landmark Design Group, P.C.
3900 Linden Ave. S.E. Suite C, Grand Rapids, MI 49548-3406
v: (616) 956-0606

date:	issued for:
04-09-2012	Bids and Permits

Seal:

Project Number:

Landmark Project Number:

10-007

A102

© 2010 Landmark Design Group P.C.

Demolition Notes - Basement

1 Remove masonry chimney.
2 Remove handrails.
3 Remove masonry for installation of hollow metal frame. Remove more masonry than required for the finished opening for installation of new bullnose block. Shore and brace as required for new lintels.
4 Remove masonry wall 8'' minimum below existing floor slab.
5 Remove stud wall
6 Remove door and frame
7 Remove glass and frames
8 Remove millwork and associated plumbing fixtures. Refer to mechanical demolition drawings for additional requirements.
9 Remove plumbing fixtures. Refer to mechanical demolition drawings for additional requirements.
10 Remove floor finishes.
11 Remove ceiling finishes.
12 Refer to structural, mechanical and electrical drawings for additional requirements.
13 Remove detention glass and frames.
14 Not Used.
15 Remove concrete walls to 8'' minimum below finished floor.
16 Not Used.
17 Remove part of existing stair.
18 Remove portion of stair and handrails.
19 Remove concrete wall as required for new door and frame. Do not overcut.
20 Remove concrete slab as required for new footings.
21 Remove concrete wall as required for new door and frame. Do not overcut.
22 Remove concrete slabs for new underfloor plumbing.

General Demolition Notes:

The demolition drawings are intended to indicate the bounds of work required. It is not expected that every item will be specifically called out in the documents. Contractor shall provide all demolition required for new construction regardless if shown on drawings or not.

Patch and repair existing construction as required due to demolition. Patch to match adjacent finish.

Refer to mechanical and electrical drawings for mechanical and electrical demolition information. Refer to mechanical and electrical drawings for work to be built-in to existing building and therefore requiring demolition. Refer to mechanical and electrical drawings for piping, conduits, ductwork and other equipment and items that are built-in or pass through existing walls, roof, floor or other existing items and require demolition. Provide required work.

Refer to wall sections for additional demolition information

Contractor shall take precautions and provide any shoring and bracing of existing bearing walls required. Use appropriate precautions at those areas. Refer to additional information on structural drawings.

Tooth in masonry when closing openings in walls where masonry remains exposed. At concealed locations anchor infill at jambs.

Remove existing floor finishes and base, strip flooring, base and adhesives, in areas scheduled to receive new floor finishes. Remove ceilings in areas to receive new ceilings – refer to floor finish plans and reflected ceiling plans.

Remove bullnosed block jambs at locations of door removal where opening is scheduled to be closed, tooth in new masonry.

At block walls to receive new frames less than the thickness of the wall remove additional block at jambs to allow for toothing-in of bullnose block at jambs

For concrete walls, saw cut openings as required for new frames. Use precautions to cut accurately to frame size – do not over-cut.

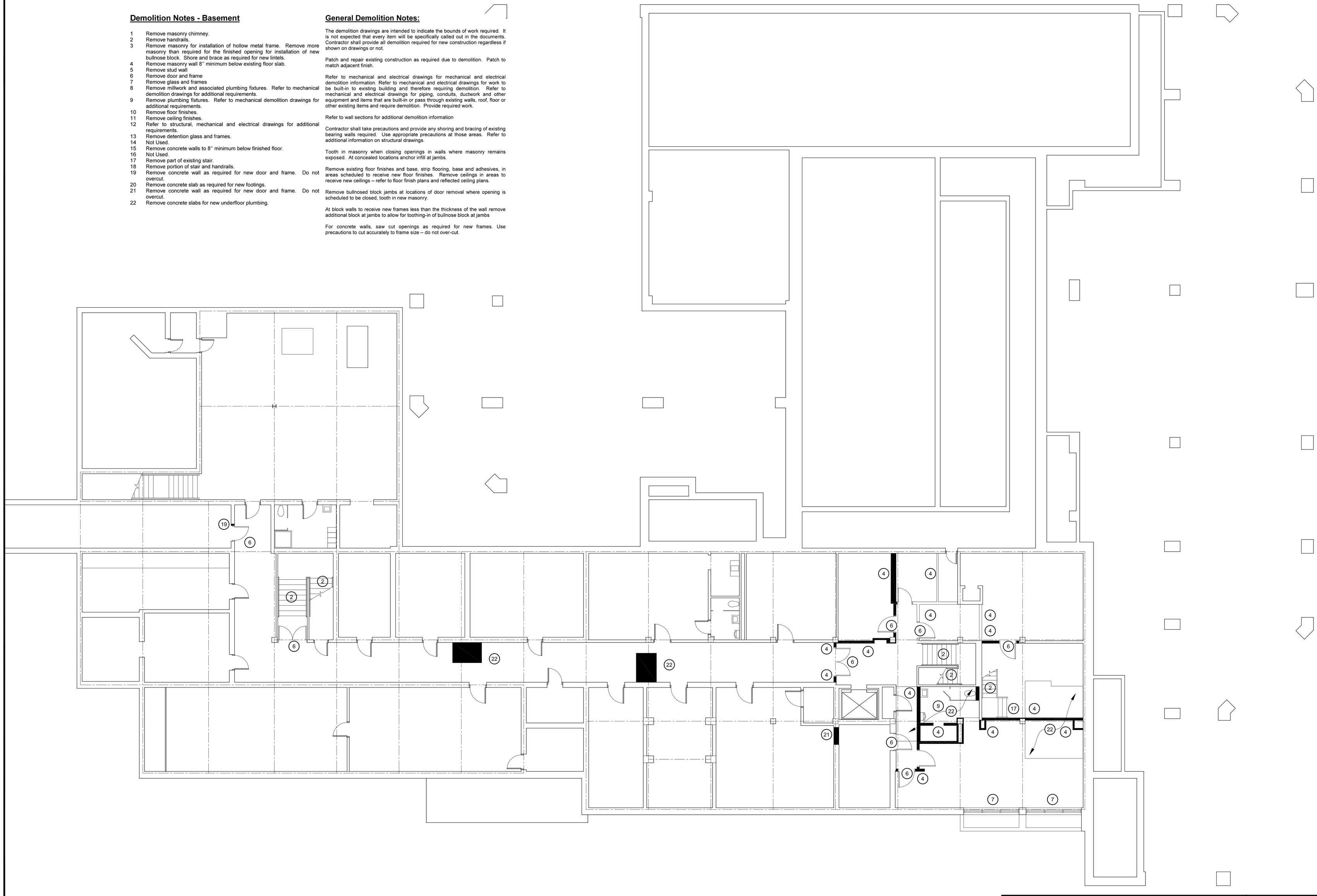

Basement Demolition Plan

Called North

13

Note:

Scale: 1/8" = 1'-0"

Consultant:

Chippewa County
City/County Building Renovation
325 Court Street
Sault Ste. Marie, MI 49783

Project Title:

Landmark Design Group, P.C.
3900 Linden Ave. S.E. Suite C, Grand Rapids, MI 49548-3406
v: (616) 956-0606

date:	issued for:
04-09-2012	Bids and Permits

Seal:

Project Number:

Landmark Project Number:
10-007

© 2010 Landmark Design Group P.C.

A101

GENERAL NOTES
1. TYPICAL CEILING HEIGHT = 8'-0".
2. COORDINATE FIXTURE TYPE WITH ELECTRICAL LIGHTING PLANS
3. TYPICAL CEILING IS 24" x 24" SUSP ACOUSTIC TILE

Ceiling Plan - Second Floor

Called North

13

Note:

Scale: 1/8" = 1'-0"

Consultant:

Chippewa County
City/County Building Renovation
325 Court Street
Sault Ste. Marie, MI 49783

Project Title:

Landmark Design Group, P.C.
3900 Linden Ave. S.E. Suite C, Grand Rapids, MI 49548-3406
v: (616) 956-0606

date:	issued for:
04-09-2012	Bids and Permits

Seal:

Project Number:

Landmark Project Number:

10-007

© 2010 Landmark Design Group P.C.

I203

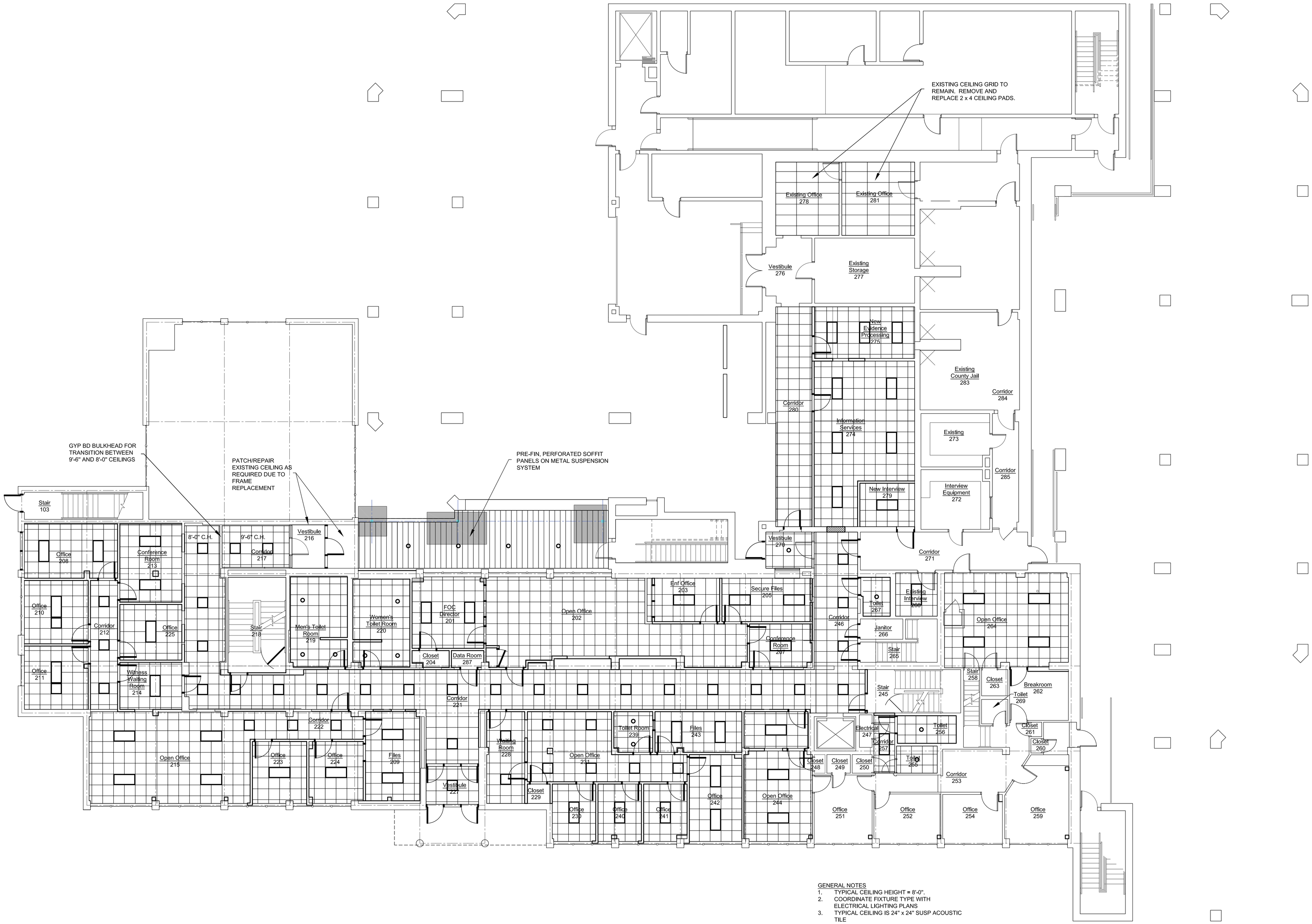

GENERAL NOTES
1. TYPICAL CEILING HEIGHT = 8'-0".
2. COORDINATE FIXTURE TYPE WITH ELECTRICAL LIGHTING PLANS
3. TYPICAL CEILING IS 24" x 24" SUSP ACOUSTIC TILE

Ceiling Plan - First Floor

Called North

13

Note:

Scale: 1/8" = 1'-0"

Consultant:

Chippewa County
City/County Building Renovation
325 Court Street
Sault Ste. Marie, MI 49783

Project Title:

Landmark Design Group, P.C.
3900 Linden Ave. S.E. Suite C, Grand Rapids, MI 49548-3406
v: (616) 956-0606

date:	issued for:
04-09-2012	Bids and Permits

Seal:

Project Number:

Landmark Project Number:

10-007

© 2010 Landmark Design Group P.C.

I202

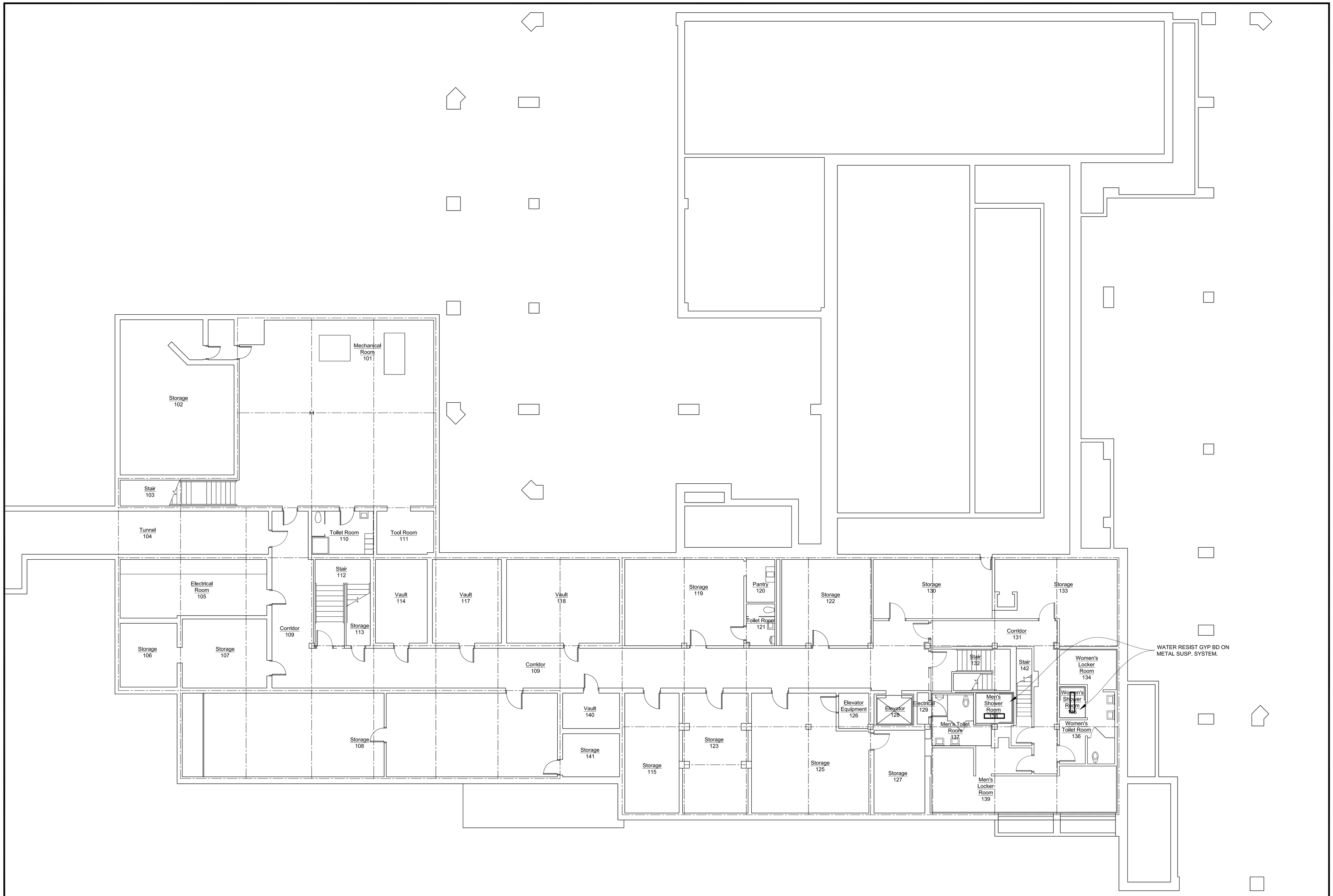

Ceiling Plan - Basement

Called North

13

Note:

Scale: 1/8" = 1'-0"

Consultant:

Chippewa County
City/County Building Renovation
325 Court Street
Sault Ste. Marie, MI 49783

Project Title:

Landmark Design Group, P.C.
3900 Linden Ave. S.E. Suite C, Grand Rapids, MI 49548-3406
v: (616) 956-0606

issued for:	date:
Bids and Permits	04-09-2012

Seal:

Project Number:

Landmark Project Number:

10-007

© 2010 Landmark Design Group P.C.

I201

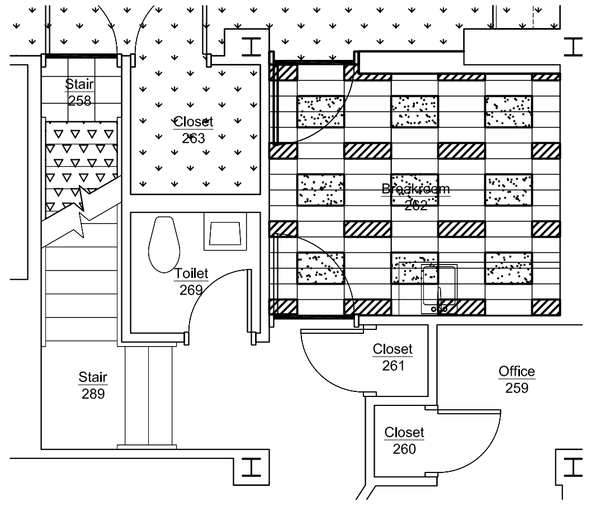

Finish Details - First Floor | Called North | 04
Note: | Scale: 1/4" = 1'-0"

Not Used | 03
Note:

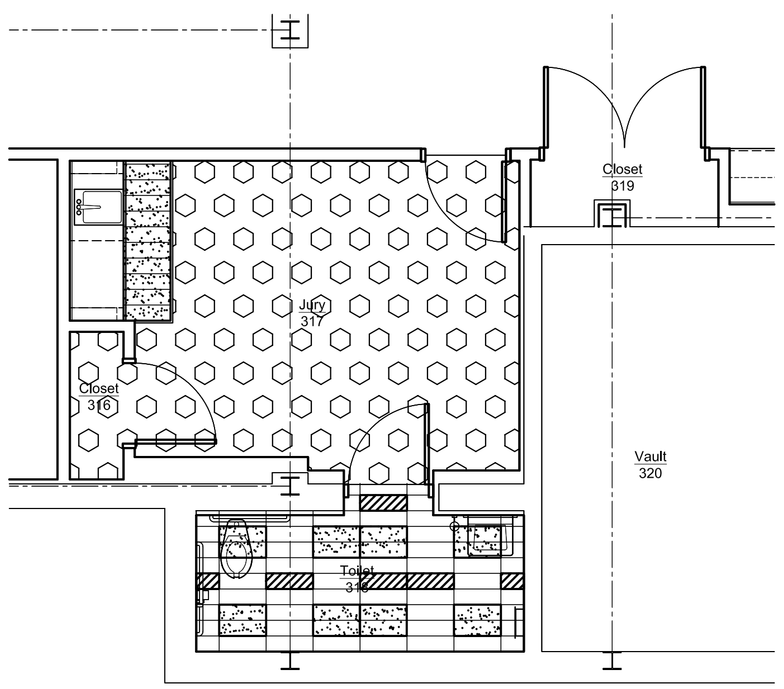

Finish Details - Second Floor | Called North | 12
Note: | Scale: 1/4" = 1'-0"

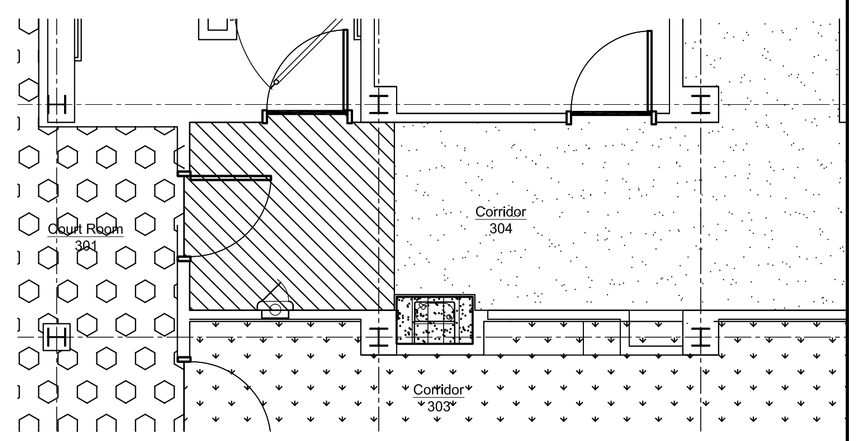

Finish Details - Second Floor | Called North | 07
Note: | Scale: 1/4" = 1'-0"

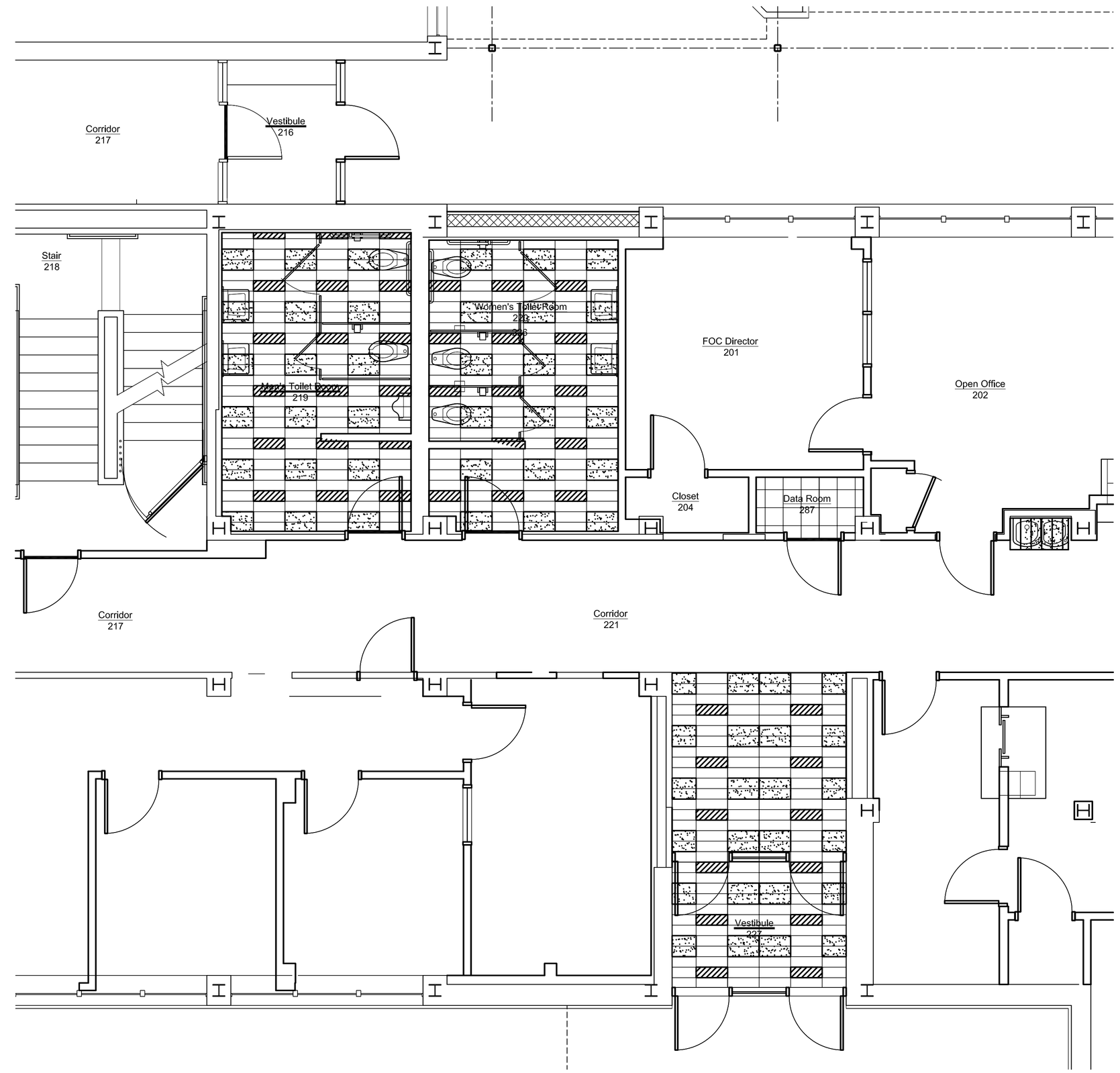

Finish Details - First Floor | Called North | 09
Note: | Scale: 1/4" = 1'-0"

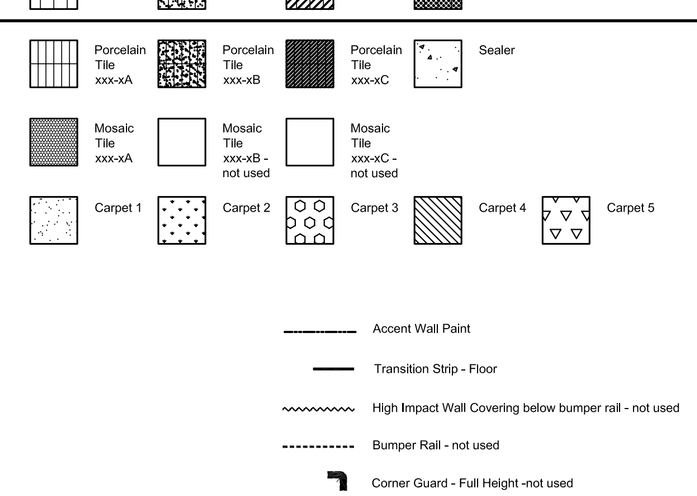

Finishes Key | 15
Note: | Scale: 1/4" = 1'-0"

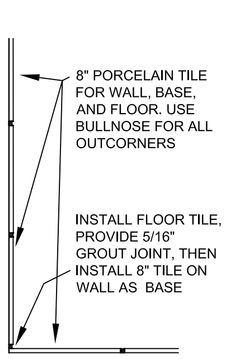

PORCELAIN FLOOR TO PORCELAIN WALL DETAIL

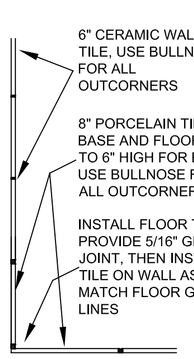

PORCELAIN FLOOR TO CERAMIC WALL DETAIL

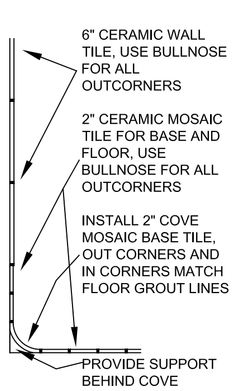

CERAMIC MOSAIC FLOOR TO CERAMIC WALL DETAIL

Finish Details - Base | 16
Note: | Scale: 1/4" = 1'-0"

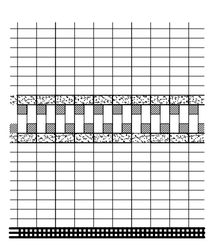

NOTE:
Use bullnose wall tile at all outside corners.
Maintain pattern throughout.
Verify grout lines with architect prior to ordering.
Align mosaic base grout lines with mosaic floor tile.
Refer to Room Finish Schedule for location of epoxy wall paint.

- Ceramic Wall Tile - CWT-2A
- Ceramic Wall Tile - CWT-2B
- Ceramic Wall Tile - CWT-2C
- Ceramic Mosaic Base - CMB-2

Finish Details - Wall Tile | 14
Note: | Scale: 1/4" = 1'-0"

Consultant:

Project Title:

Chippewa County
City/County Building Renovation
325 Court Street
Sault Ste. Marie, MI 49783

Landmark Design Group, P.C.
3900 Linden Ave. S.E. Suite C, Grand Rapids, MI 49548-3406
v: (616) 956-0606

issued for:	date:
Bids and Permits	04-09-2012

Seal:

Project Number:

Landmark Project Number:
10-007

© 2010 Landmark Design Group P.C.

I104

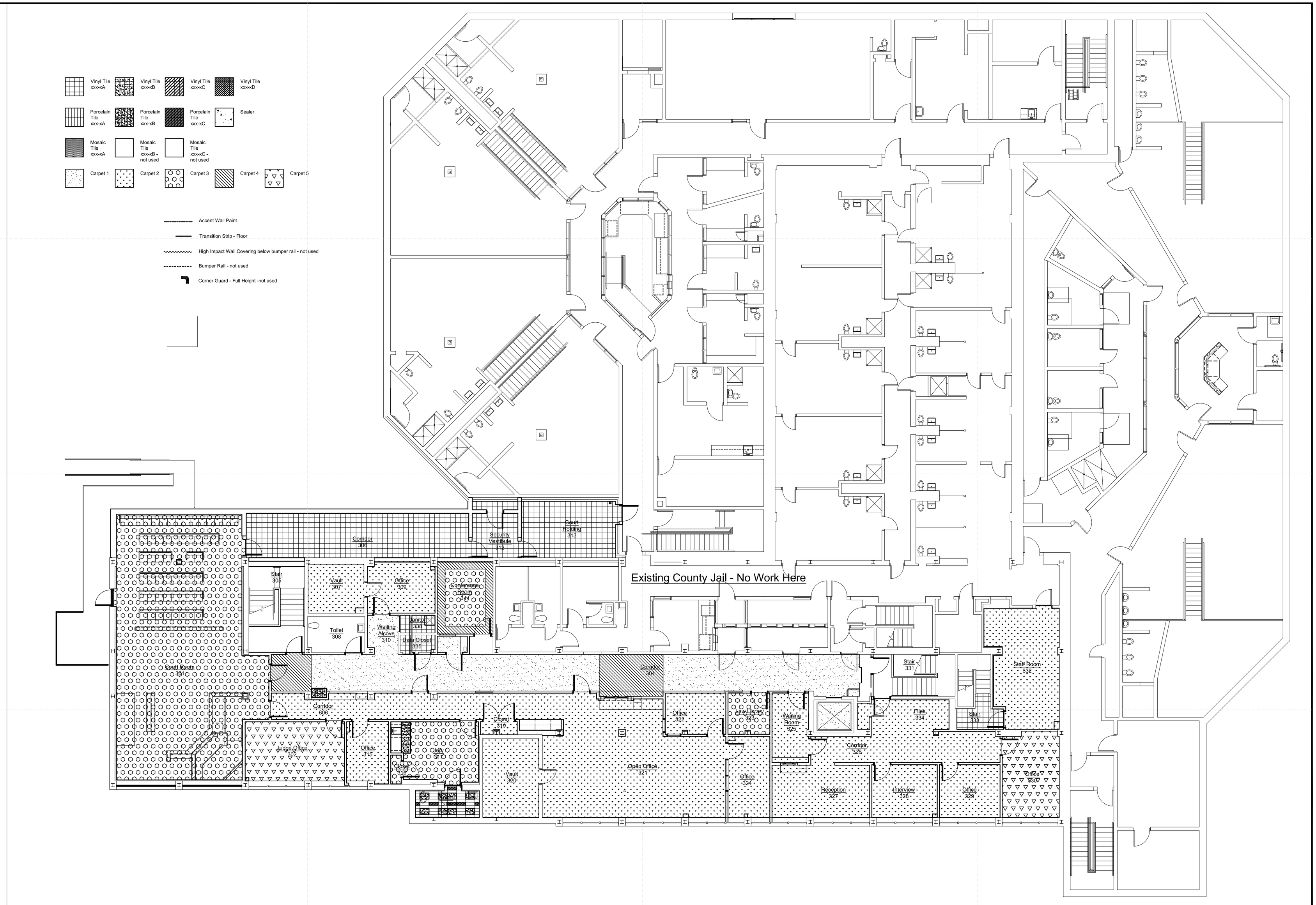

Consultant:

Chippewa County
City/County Building Renovation
325 Court Street
Sault Ste. Marie, MI 49783

Project Title:

Landmark Design Group, P.C.
3900 Linden Ave. S.E. Suite C, Grand Rapids, MI 49548-3406
v: (616) 956-0606

Issued for:	Date:
Bids and Permits	04-09-2012

Seal

Project Number:

Landmark Project Number: 10-007

© 2010 Landmark Design Group P.C.

I103

Floor Finishes Plan - Second Floor

Called North

13

Note:

Scale: 1/8" = 1'-0"

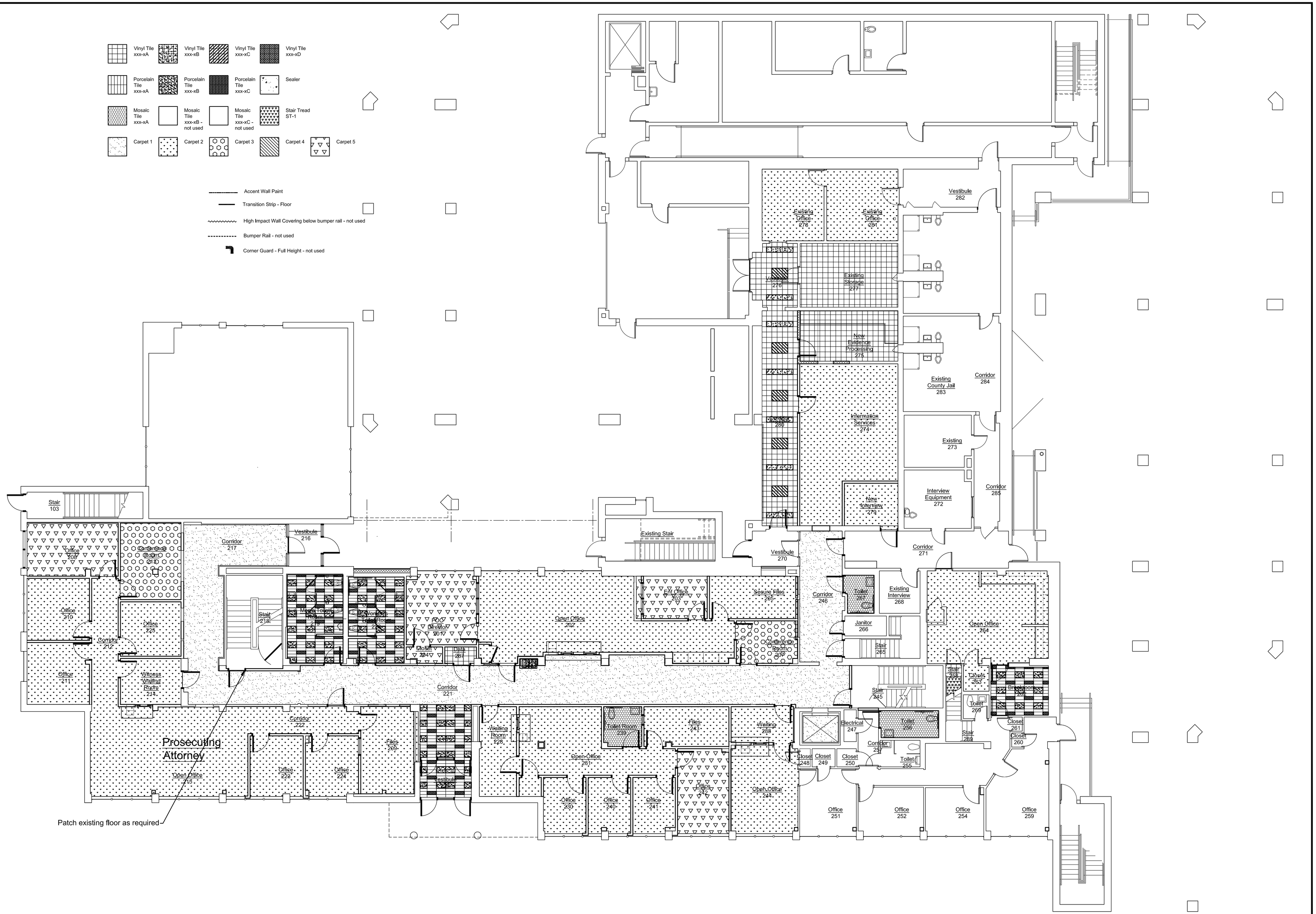

Floor Finishes Plan - First Floor

Called North

13

Note:

Scale: 1/8" = 1'-0"

Consultant:

Chippewa County
City/County Building Renovation
325 Court Street
Sault Ste. Marie, MI 49783

Project Title:

Landmark Design Group, P.C.
3900 Linden Ave. S.E. Suite C, Grand Rapids, MI 49548-3406
v: (616) 956-0606

date:	issued for:
04-09-2012	Bids and Permits

Seal:

Project Number:

Landmark Project Number:

10-007

© 2010 Landmark Design Group P.C.

I102

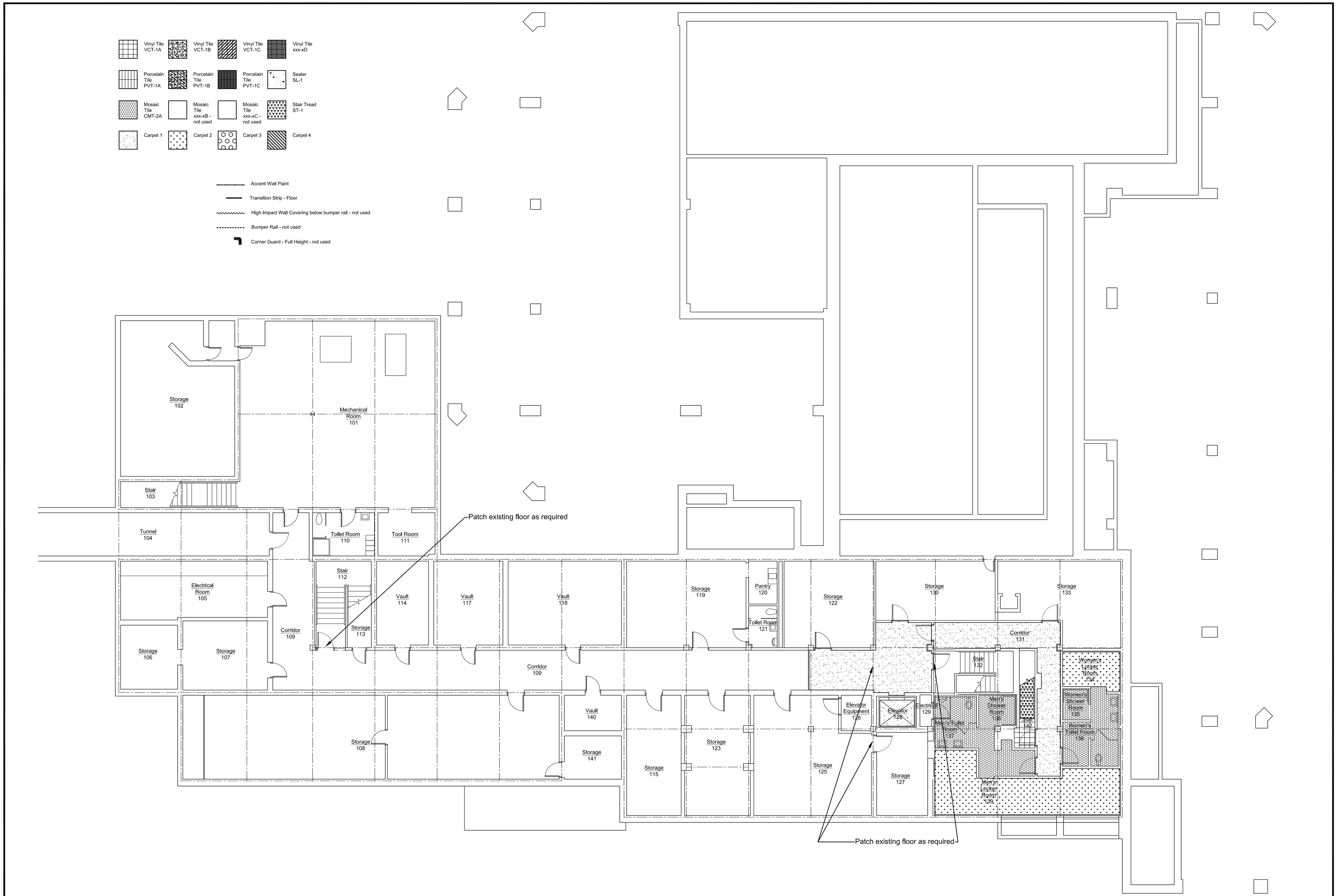

Floor Finishes Plan - Basement

Called North

13

Note:

Scale: 1/8" = 1'-0"

Consultant:

Chippewa County
City/County Building Renovation
325 Court Street
Sault Ste. Marie, MI 49783

Project Title:

Landmark Design Group, P.C.
3900 Linden Ave. S.E. Suite C, Grand Rapids, MI 49548-3406
v: (616) 956-0606

issued for:	
date: 04-09-2012	Bids and Permits

Seal:

Project Number:

Landmark Project Number:

10-007

© 2010 Landmark Design Group P.C.

I101

AREA TOTALS:

GROSS FLOOR AREA (GFA) = 8,300 S.F.

WORK AREA (WA) = 4,475 S.F.

NEW CONSTRUCTION (NC) = 1,045 S.F.

RATIO ((WA+NC)/GFA) = 66.51%

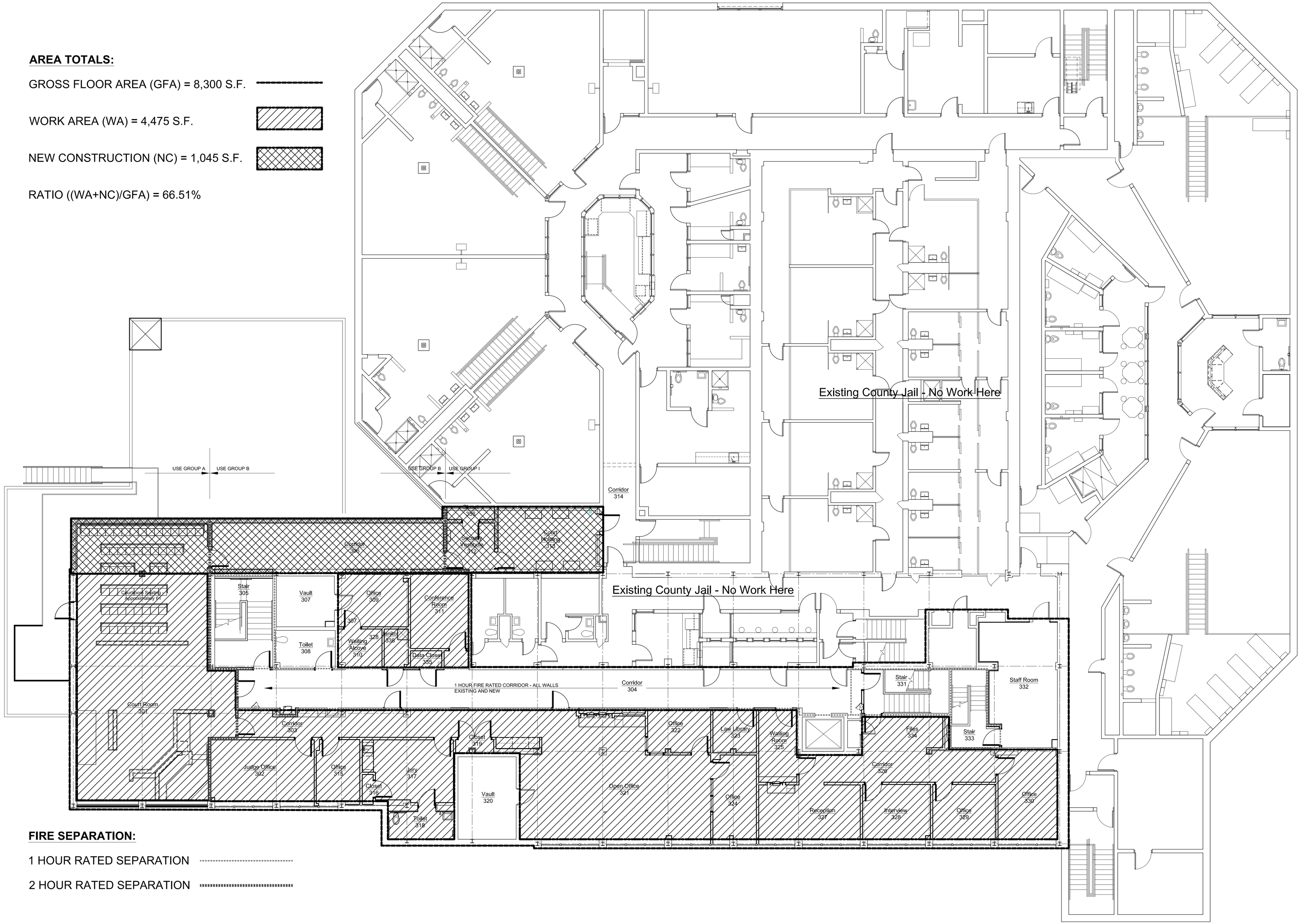

FIRE SEPARATION:

1 HOUR RATED SEPARATION

2 HOUR RATED SEPARATION

Second Floor Plan - Code Review

Called North

13

Note:

Scale: 1/8" = 1'-0"

Consultant:

Chippewa County
City/County Building Renovation
325 Court Street
Sault Ste. Marie, MI 49783

Project Title:

Landmark Design Group, P.C.
3900 Linden Ave. S.E. Suite C, Grand Rapids, MI 49548-3406
v: (616) 956-0606

date:	issued for:
04-09-2012	Bids and Permits

Seal:

Project Number:

Landmark Project Number:

10-007

© 2010 Landmark Design Group P.C.

G004

AREA TOTALS:

GROSS FLOOR AREA (GFA) = 12,300 S.F.

WORK AREA (WA) = 4,690 S.F.

RATIO (WA/GFA) = 38.13%

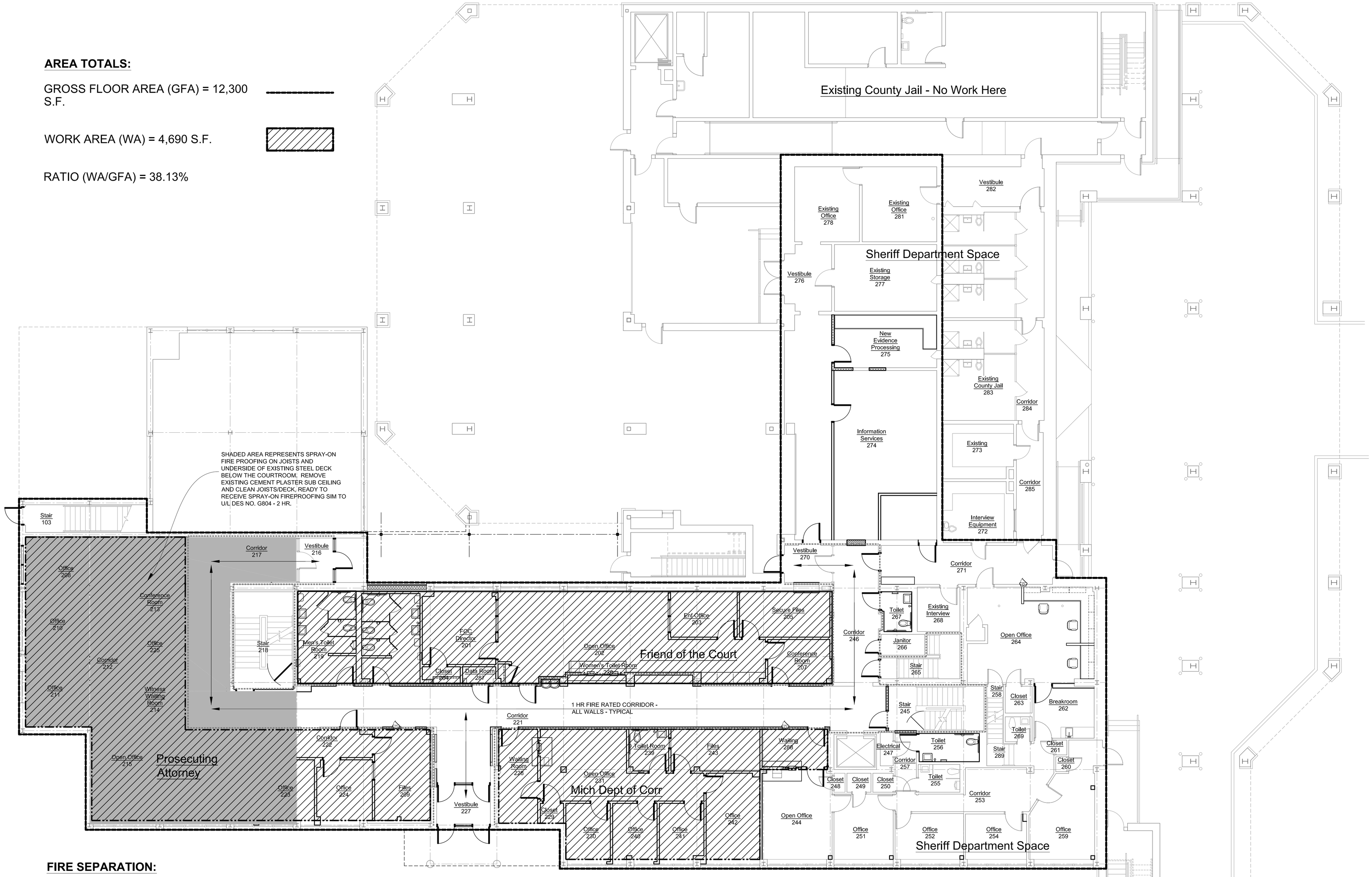

FIRE SEPARATION:

1 HOUR RATED SEPARATION

2 HOUR RATED SEPARATION

First Floor Plan - Code Review

Called North

13

Note:

Scale: 1/8" = 1'-0"

Consultant:

Chippewa County
City/County Building Renovation
325 Court Street
Sault Ste. Marie, MI 49783

Project Title:

Landmark Design Group, P.C.
3900 Linden Ave. S.E. Suite C, Grand Rapids, MI 49548-3406
v: (616) 956-0606

date:	issued for:
04-09-2012	Bids and Permits

Seal:

Project Number:

Landmark Project Number:

10-007

© 2010 Landmark Design Group P.C.

G003

AREA TOTALS:

GROSS FLOOR AREA (GFA) = ----------
12,075 S.F.

WORK AREA (WA) = 1,763 S.F.

RATIO (WA/GFA) = 14.60%

Code Data

CHIPPEWA COUNTY – CITY COUNTY BUILDING RENOVATION CODE DATA

A. CODES USED

1. 2009 MICHIGAN BUILDING CODE
2. 2009 MICHIGAN REHABILITATION CODE FOR EXISTING BUILDINGS
3. 2009 MICHIGAN PLUMBING CODE
4. 2009 MICHIGAN MECHANICAL CODE
5. 2006 MICHIGAN ELECTRIC CODE

B. FLOOR AREA TOTALS

1. EXISTING FLOOR AREA TOTALS (not including the jail)
   a. BASEMENT = 12,075 SQ. FT
   b. FIRST FLOOR = 12,300 SQ. FT.
   c. SECOND FLOOR = 6,730 SQ. FT.
   TOTAL = 31,105 SQ. FT.
2. RENOVATED FLOOR AREA TOTAL (not including jail)
   a. BASEMENT = 1,763 SQ. FT
   b. FIRST FLOOR = 4,690 SQ. FT.
   c. SECOND FLOOR = 4,475 SQ. FT.
   TOTAL = 10,928 SQ. FT.
3. NEW CONSTRUCTION
   a. SECOND FLOOR PRISONER CORRIDOR, COURT AND HOLDING AREA = 1,045 SQ. FT

C. USE GROUP CLASSIFICATION

1. BUSINESS GROUP B, ALL COUNTY DEPARTMENTS.
2. ASSEMBLY GROUP A-3, DISTRICT COURT ROOM.
3. MODERATE HAZARD STORAGE, GROUP S-1, BASEMENT.

D. MIXED OCCUPANCIES

1. PER TABLE 508.4, 1 HOUR BETWEEN A-3 AND B
   PER TABLE 508.4, 0 HOUR BETWEEN S-1 AND B
2. PER TABLE 508.4.2. IN EACH STORY THE BUILDING AREA RATIO DOES NOT EXCEED 1.

E. TYPE OF CONSTRUCTION

1. THE EXISTING BUILDING IS A NON COMBUSTABLE, UNPROTECTED TYPE II-B CONSTRUCTION.
2. NEW CONSTRUCTION SHALL BE NON COMBUSTABLE, UNPROTECTED, TYPE II-B.
3. THE EXISTING BUILDING IS NOT EQUIPPED WITH AN AUTOMATIC SPRINKLER SYSTEM.

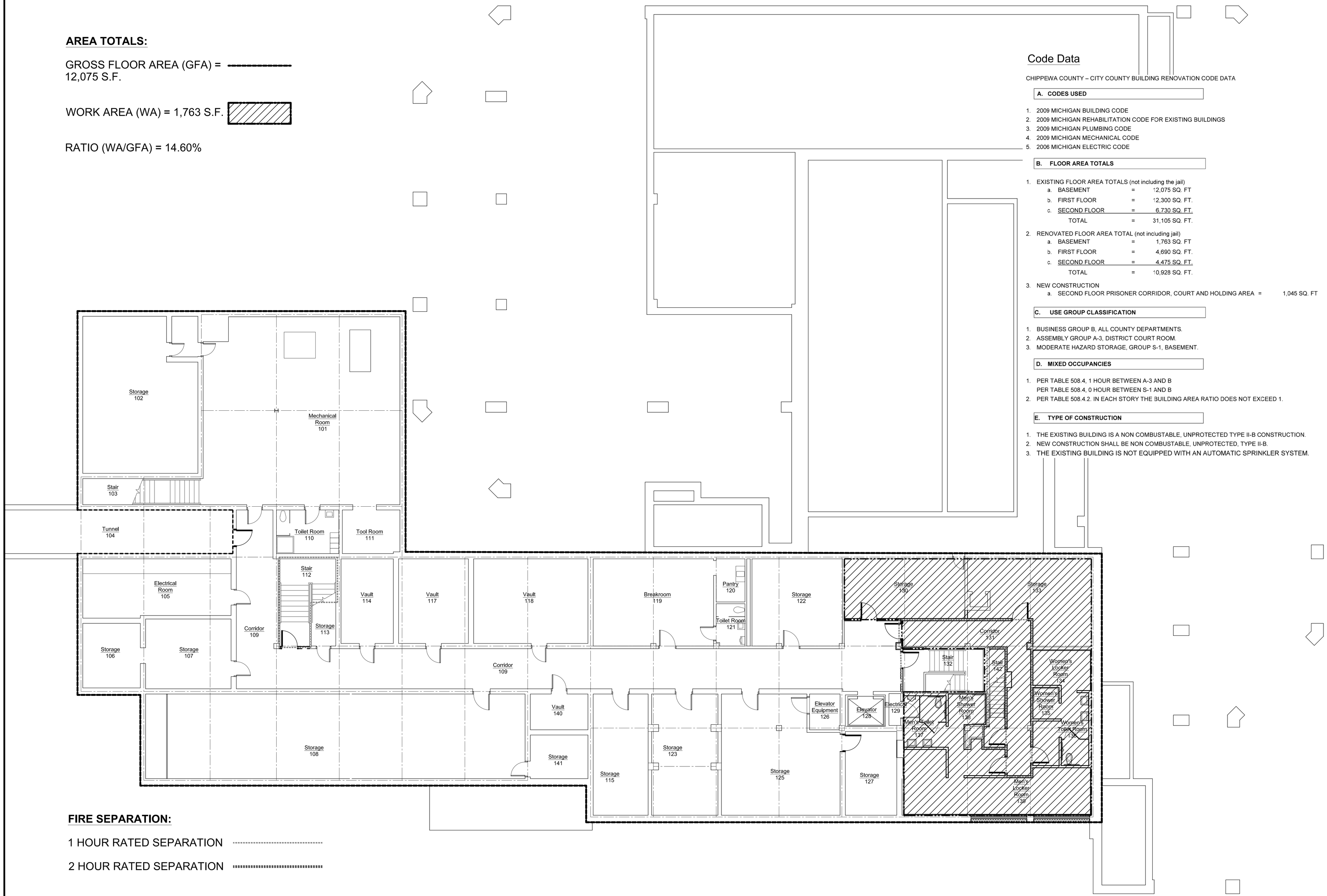

FIRE SEPARATION:

1 HOUR RATED SEPARATION

2 HOUR RATED SEPARATION

Basement Floor Plan - Code Review — Called North — 13

Note: — Scale: 1/8" = 1'-0"

Consultant:

Chippewa County
City/County Building Renovation
325 Court Street
Sault Ste. Marie, MI 49783

Project Title:

Landmark Design Group, P.C.
3900 Linden Ave. S.E. Suite C, Grand Rapids, MI 49548-3406
v: (616) 956-0606

issued for:	date:
Bids and Permits	04-09-2012

Seal:

Project Number:

Landmark Project Number: 10-007

© 2010 Landmark Design Group P.C.

G002

Chippewa County

City/County Building Renovation

Bids And Permits

Project Title	01
Note:	

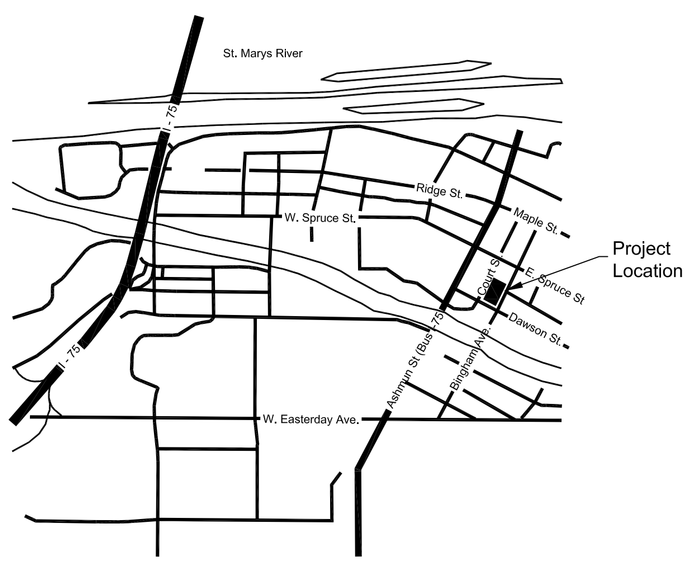

Sault Ste. Marie,
Michigan

Location Map	04
Note:	

1. UNLESS NOTED OTHERWISE, EXISTING WALLS SHOWN TO REMAIN SHALL BE SURFACE PREPARED, READY FOR NEW FINISHES PER SCHEDUES.
2. SEE STRUCTURAL FOR ADDITIONAL INFORMATION ON GROUTING AND REINFORCING REQUIREMENTS.
3. CONSTRUCT WALLS PER "WALL TYPES" SCHEDULE. PROVIDE MOVEMENT RELIEF TRACK AT TOP OF WALLS ABUTTING ROOF STRUCTURE.
4. WALLS WITH GYPSUM BOARD FULL HEIGHT (STUDS AND GYP BD) ARE FINISHED (TAPED, SANDED AND PAINTED) FROM FLOOR TO 6" ABOVE FINISHED CEILING AND TAPED ONLY TO THE DECK LID.
5. WALLS CONSTRUCTED TO THE DECK LID WITHOUT FINISHED CEILINGS ARE FINISHED (TAPED, SANDED, PRIMED AND PAINTED) FROM FLOOR TO DECK LID.
6. INSTALL FIRESTOPPING SEALANTS AT PERIMETER AND OPENINGS IN RATED WALLS.
7. PROVIDE BULLNOSE BLOCK AT OUTSIDE CORNERS, JAMBS (WITHOUT FRAMES MATCHING THE THICKNESS OF THE WALL) AND DOUBLE BULLNOSE AT WALL ENDS.
8. FURRING AND GYPSUM BOARD ON EXTERIOR WALLS SHALL EXTEND FROM FLOOR TO FLOOR OR ROOF DECK ABOVE WITH 1 ½" RIGID INSULATION IN THE FURRING SPACE. WALL TO BE FINISHED (TAPED, SANDED, PRIMED AND PAINTED) FROM FLOOR TO 6" ABOVE CEILING LINE.
9. SEAL FULL PERIMETERS OF FRAMES BOTH SIDES. USE DETENTION SEALANT AT HOLDING AREAS.
10. INSTALL TAMPER RESISTANT FASTENERS IN ALL DETENTION AREAS. THIS INCLUDES EXPOSED MECHANICAL AND ELECTRICAL DEVICES.
11. VERIFY SIZE OF EQUIPMENT FOR INTERIOR INSTALLATION. COORDINATE DELIVERY AND CONSTRUCTION TO ALLOW FOR DELIVERY PRIOR TO COMPLETING CONSTRUCTION IF REQUIRED DUE TO SIZE OF EQUIPMENT.
12. COORDINATE MECHANICAL AND ELECTRICAL TRADES FOR LOCATION OF ACCESS PANELS. COORDINATE TRADES TO GROUP ITEMS NEEDING ACCESS TO MINIMIZE NUMBER OF PANELS.
13. ALL SHOP PRIMED EQUIPMENT, FURNISHINGS AND FABRICATIONS SHALL BE FIELD PAINTED, DO NOT PAINT STAINLESS STEEL, BRONZE, BRASS, PLATED OR PREFINISHED EQUIPMENT.
14. INSTALL INTERNAL BLOCKING FOR ATTACHMENT OF WALL MOUNTED EQUIPMENT (TACK BOARDS, TOILET ACCESSORIES, MARKER BOARDS, DISPLAY CASE, WALL CABINETS, TV MOUNTS, BUMPER RAIL, ETC.).

General Notes	05
Note:	

Sheet List Table

Sheet Number	Sheet Title
General	
G001	Cover Sheet
G002	Basement Floor Plan - Code Review
G003	First Floor Plan - Code Review
G004	Second Floor Plan - Code Review
Architectural	
A101	Basement Demolition Plan
A102	First Floor Demolition Plan
A103	Second Floor Demolition Plan
A104	Basement Floor Plan
A105	First Floor Plan
A106	Second Floor Plan
A107	Roof Plan
A111	Toilet Room Plans and Plan Details
A201	Elevations and Sections
A401	Court and Millwork
A411	Millwork Sections
A412	Millwork Details
A413	Door and Frame Elevations - Details
A501	Wall Sections
A502	Wall Sections
A503	Wall Sections
A504	Wall Sections
Interiors	
I101	Floor Finishes Plan - Basement
I102	Floor Finishes Plan - First Floor
I103	Floor Finishes Plan - Second Floor
I104	Finish Details
I201	Ceiling Plan - Basement
I202	Ceiling Plan - First Floor
I203	Ceiling Plan - Second Floor
Structural	
S001	General Structural Notes
S101	Foundation and Infill Floor Framing Plan
S102	Second Floor Framing Plan
S103	Roof Framing Plan
S201	Foundation Details
S301	Framing Details
S302	Framing Details
Plumbing	
P000	Plumbing - Foundation
P100	Plumbing - Basement
P101	Plumbing - First Floor
P102	Plumbing - Second Floor
P150	Plumbing - Details
Mechanical	
M100	HVAC Piping - Basement
M101	HVAC Piping - First Floor
M102	HVAC Piping - Second Floor
M150	HVAC Piping - Details
M200	HVAC Ductwork - Basement
M201	HVAC Ductwork - First Floor
M202	HVAC Ductwork - Second Floor
M250	HVAC Ductwork - Details
Mech and Elec	
ME100	M-E Demolition - Basement
ME101	M-E Demolition - First Floor
ME102	M-E Demolition - Second Floor
ME203	M-E Roof Plan
ME301	M-E Schedules
Electrical	
E100	Electric Power - Basement
E101	Electric Power - First Floor
E102	Electric Power - Second Floor
E150	Electric Power - Details
E200	Electric Lighting - Basement
E201	Electric Lighting - First Floor
E202	Electric Lighting - Second Floor
E250	Electric Lighting - Schedules and Details
Special Systems	
SS000	Special Systems - General
SS100	Special Systems - Basement
SS101	Special Systems - First Floor
SS102	Special Systems - Second Floor
SS150	Special Systems - Details

Sheet Index	03
Note:	

Owner
Chippewa County
319 Court Street
Sault Ste. Marie, MI 49783

Design Builder
Gundlach Champion, Inc.
180 Trades Mine Rd.
Iron Mountain, MI 49801
V: (906) 779-2303
F: (906) 779-8947

Architect
Landmark Design Group, P.C.
3900 Linden Ave SE, Suite C
Grand Rapids, MI 49548
V: (616) 956-0606
office@landmark.us.com

Structural Engineer
J.D.H. Engineering, Inc.
3000 Ivanrest, Suite B
Grandville, Michigan 49418
V: (616) 531-6020
F: (616) 531-8637

Mechanical/Electrical Engineer
Morgan M. Landon P.E. LLC
2054 Brandon Drive NW
Grand Rapids, MI 49504
V: (616) 608-3372
F: (616) 608-3372

Addresses	02
Note:	

NOTE:

DRAWINGS AND SPECIFICATIONS ARE ALL INCLUSIVE. BIDDERS ARE REQUIRED TO REVIEW ALL DRAWINGS AND SPECIFICATIONS FOR COMPLIANCE WITH THE COMPLETE PROJECT.

Consultant:

Chippewa County
City/County Building Renovation
325 Court Street
Sault Ste. Marie, MI 49783

Project Title:

Landmark Design Group, P.C.
3900 Linden Ave. S.E. Suite C, Grand Rapids, MI 49548-3406
v: (616) 956-0606

date:	issued for:
04-09-2012	Bids and Permits

Seal:

Project Number:

Landmark Project Number: 10-007

© 2010 Landmark Design Group P.C.

G001

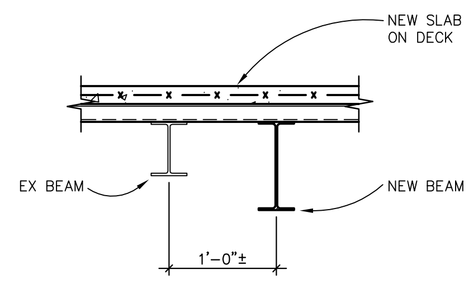

1 S302 FRAMING DETAIL
NOT TO SCALE

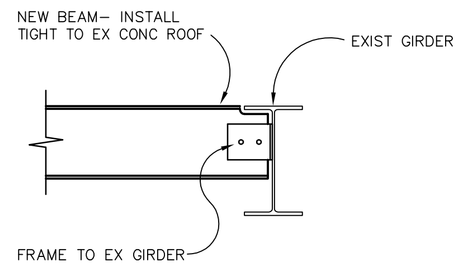

2 S302 FRAMING DETAIL
NOT TO SCALE

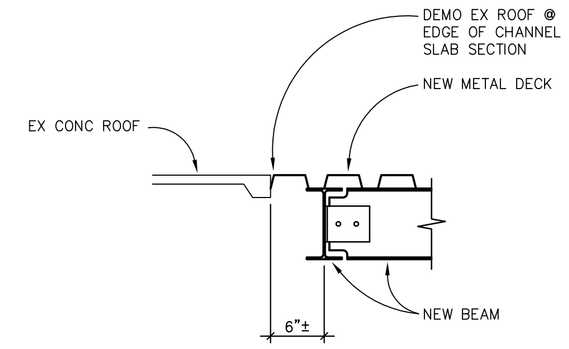

3 S302 FRAMING DETAIL
NOT TO SCALE

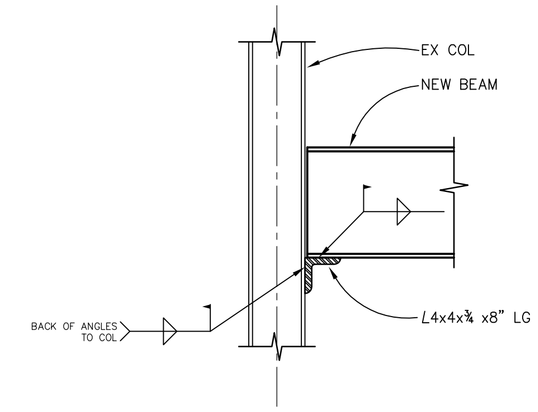

4 S302 FRAMING DETAIL
NOT TO SCALE

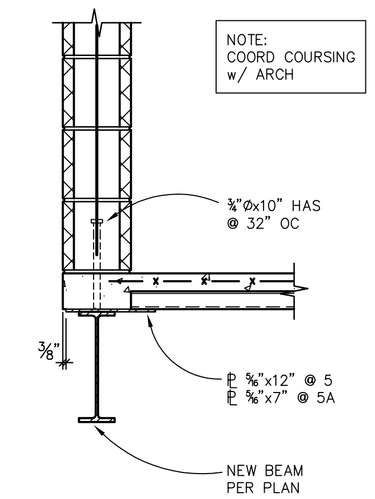

5 S302 5A S302 FRAMING DETAIL
NOT TO SCALE

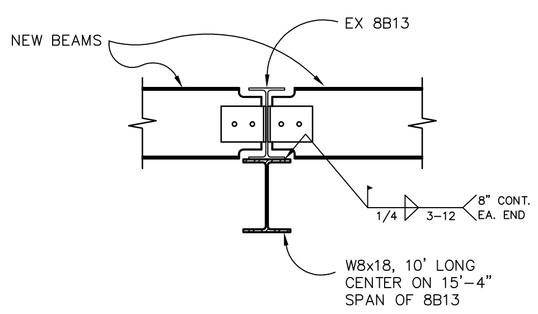

6 S302 FRAMING DETAIL
NOT TO SCALE

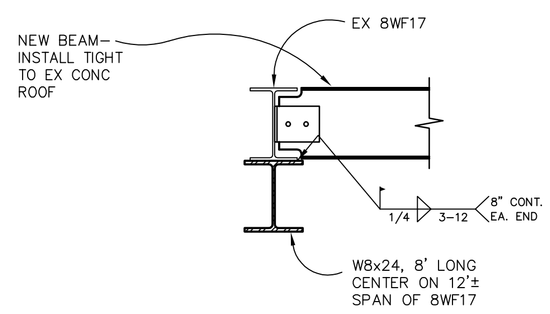

7 S302 FRAMING DETAIL
NOT TO SCALE

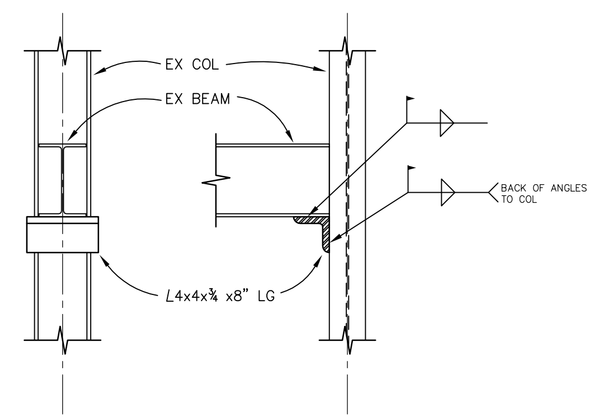

8 S302 FRAMING DETAIL
NOT TO SCALE

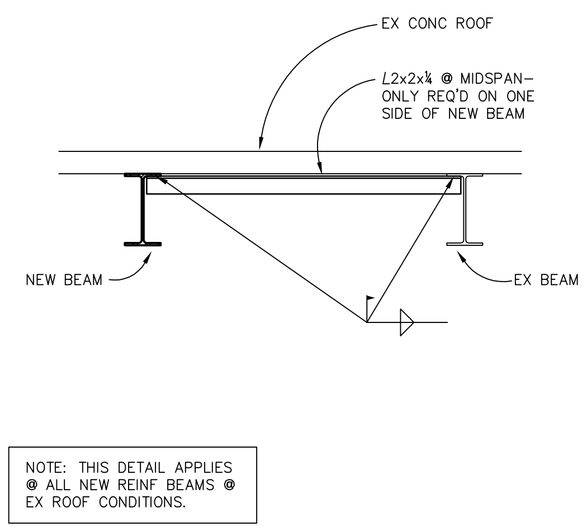

9 S302 FRAMING DETAIL
NOT TO SCALE

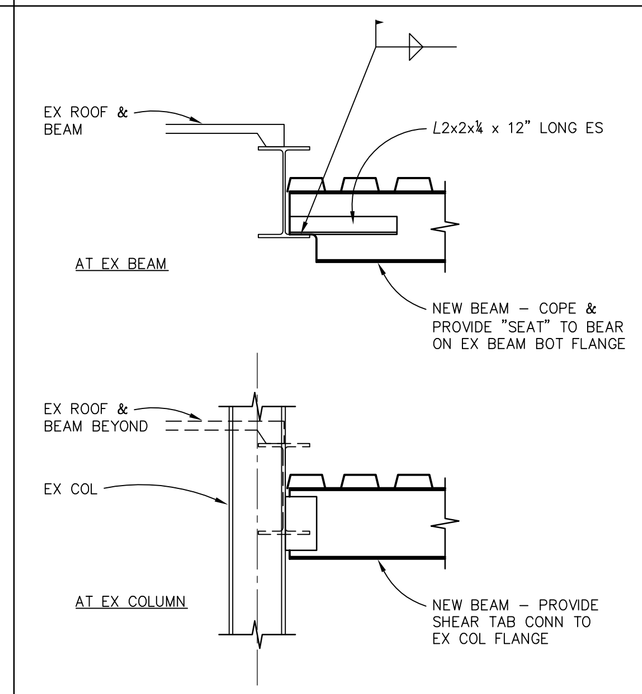

10 S302 FRAMING DETAIL
NOT TO SCALE

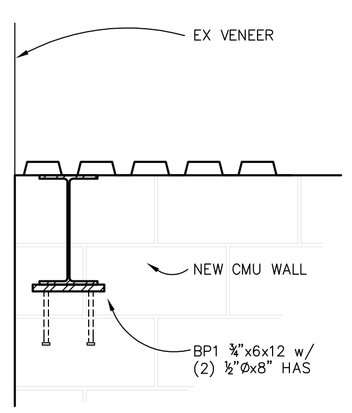

11 S302 FRAMING DETAIL
NOT TO SCALE

12 S302 NOT USED
NOT TO SCALE

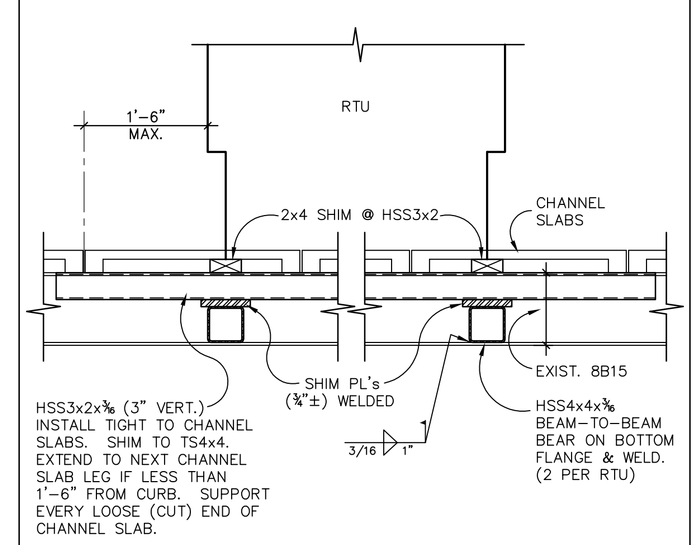

13 S302 FRAMING DETAIL
NOT TO SCALE

JDH Structural Engineering
2011-02-007
3000 Ivanrest Avenue SW , Suite B
Grandville, Michigan 49418
P 616.531.6020 , F 616.531.8637

Consultant:

Chippewa County
City/County Building Renovation
325 Court Street
Sault Ste. Marie, MI 49783

Project Title:

Landmark Design Group, P.C.
3900 Linden Ave. S.E. Suite C, Grand Rapids, MI 49548-3406
v: (616) 956-0606

date:	issued for:
04-09-2012	Bids and Permits

Seal:

Project Number:

Landmark Project Number:
10-007

© 2010 Landmark Design Group P.C.

S302

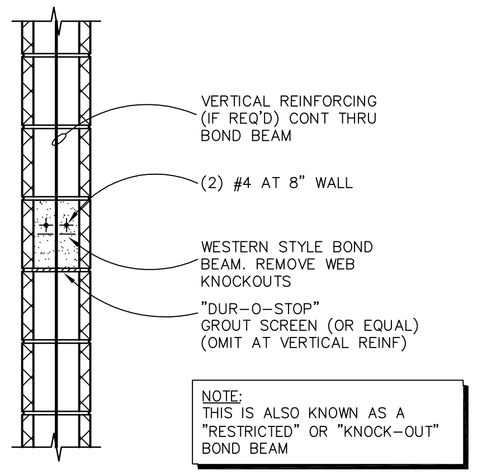

1 S301 TYPICAL BOND BEAM
NOT TO SCALE

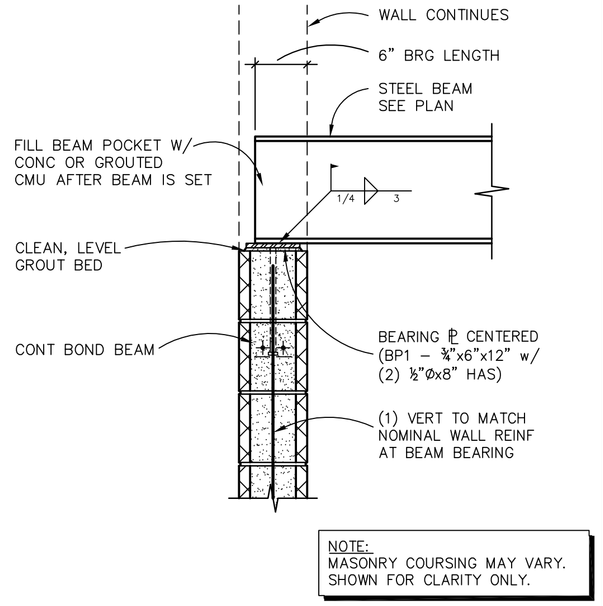

2 S301 TYPICAL BEAM BEARING
NOT TO SCALE

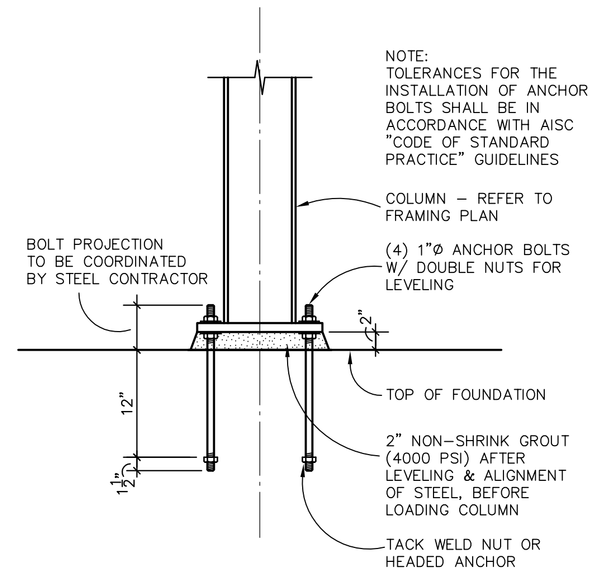

3 S301 TYPICAL COLUMN SETTING DETAIL
NOT TO SCALE

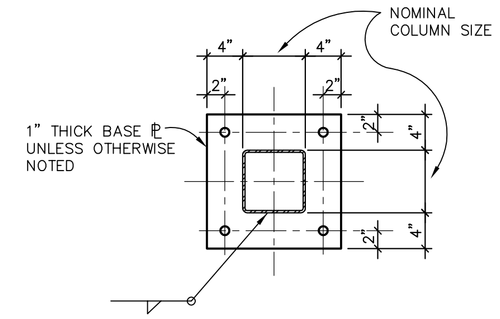

4 S301 TYPICAL BASE PLATE DETAIL
NOT TO SCALE

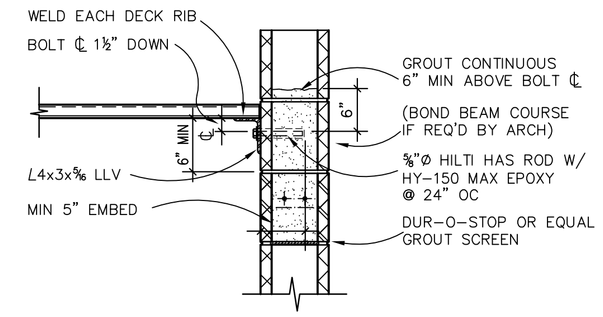

5 S301 TYPICAL DECK SUPPORT ANGLE (DA)
NOT TO SCALE

6 S301 NOT USED
NOT TO SCALE

7 S301 NOT USED
NOT TO SCALE

8 S301 NOT USED
NOT TO SCALE

9 S301 NOT USED
NOT TO SCALE

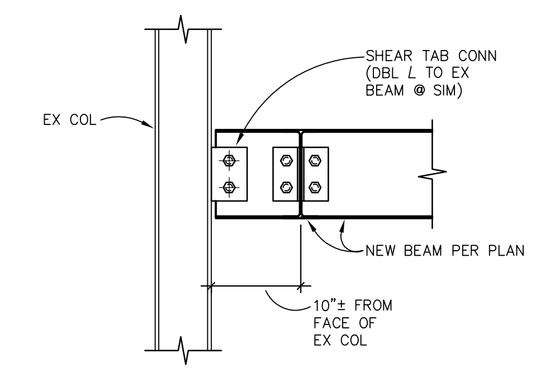

10 S301 FRAMING DETAIL
NOT TO SCALE

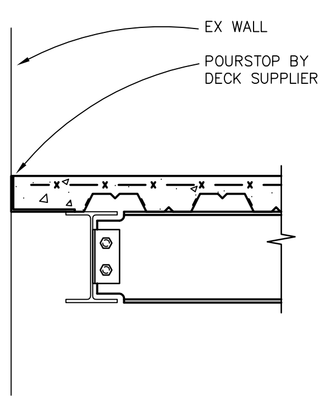

11 S301 FRAMING DETAIL
NOT TO SCALE

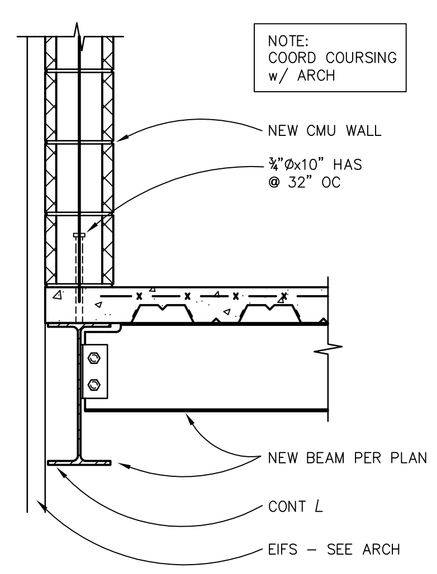

12 S301 FRAMING DETAIL
NOT TO SCALE

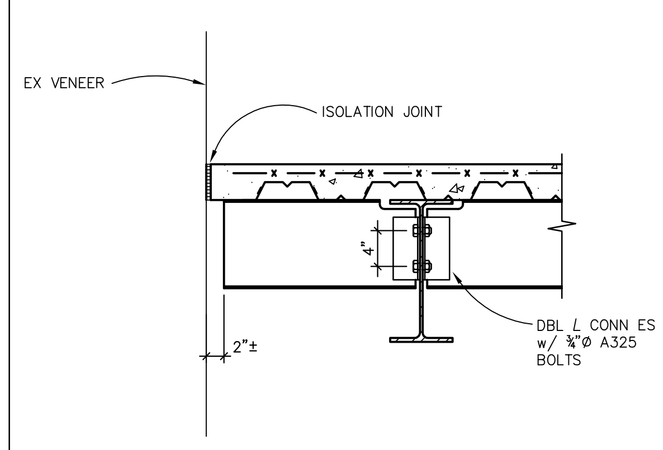

13 S301 FRAMING DETAIL
NOT TO SCALE

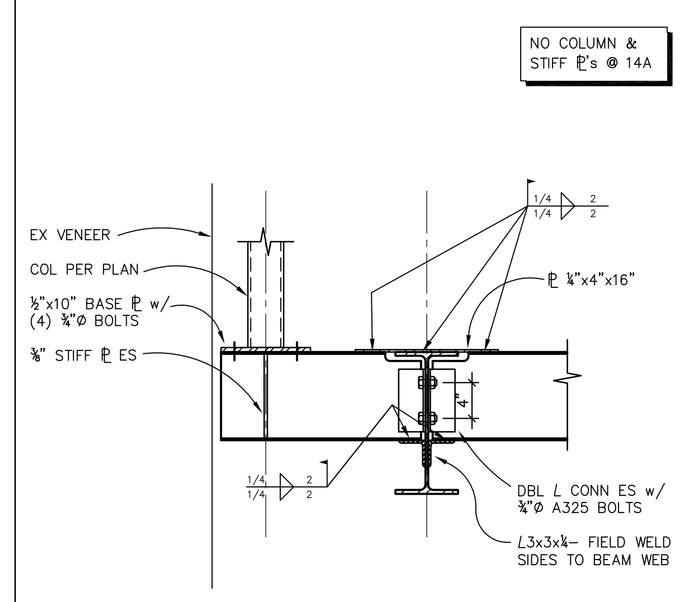

14 S301 14A S301 FRAMING DETAIL
NOT TO SCALE

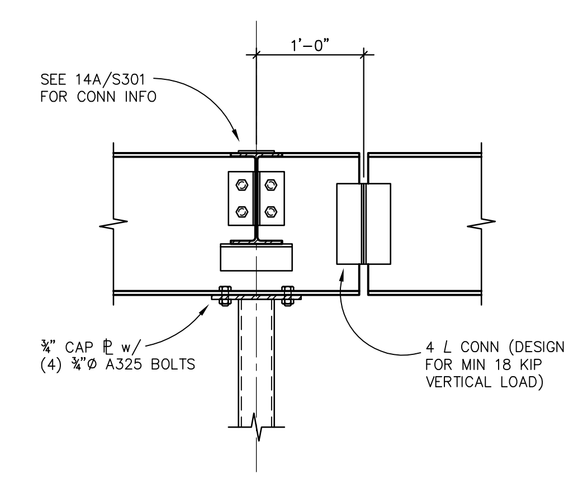

15 S301 FRAMING DETAIL
NOT TO SCALE

JDH Structural Engineering
2011-02-007
3000 Ivanrest Avenue SW , Suite B
Grandville, Michigan 49418
P 616.531.6020 , F 616.531.8637

Consultant:

Chippewa County
City/County Building Renovation
325 Court Street
Sault Ste. Marie, MI 49783

Project Title:

Landmark Design Group, P.C.
3900 Linden Ave. S.E. Suite C, Grand Rapids, MI 49548-3406
v: (616) 956-0606

Issued for:	date:
Bids and Permits	04-09-2012

Seal:

Project Number:

Landmark Project Number:
10-007

© 2010 Landmark Design Group P.C.

S301

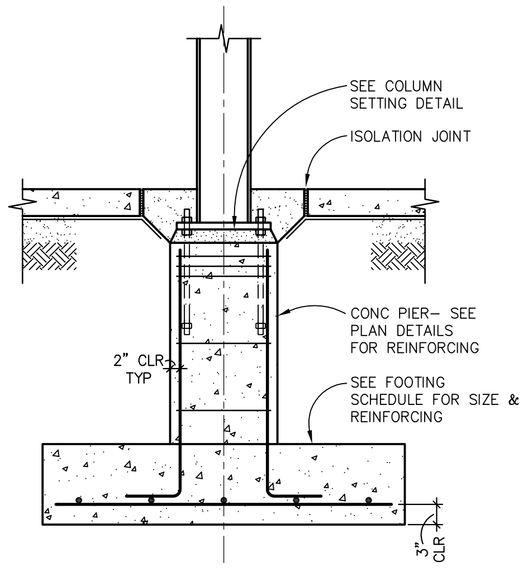

1 S201 TYPICAL EXTERIOR COLUMN PIER
NOT TO SCALE

2 S201 NOT USED
NOT TO SCALE

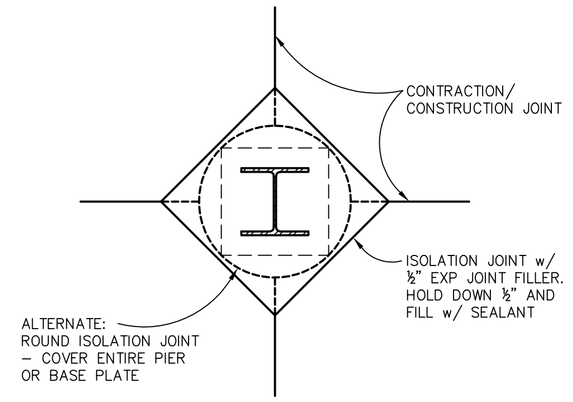

3 S201 TYPICAL COLUMN ISOLATION JOINT
NOT TO SCALE

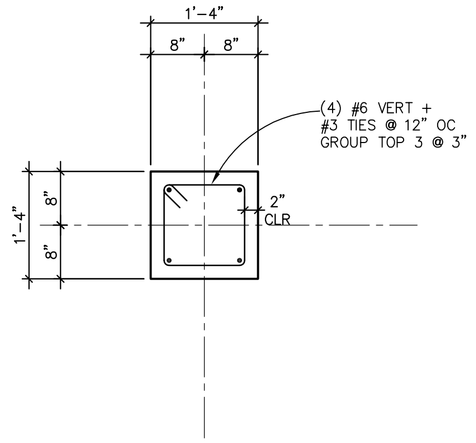

4 S201 PIER DETAIL – P1
NOT TO SCALE

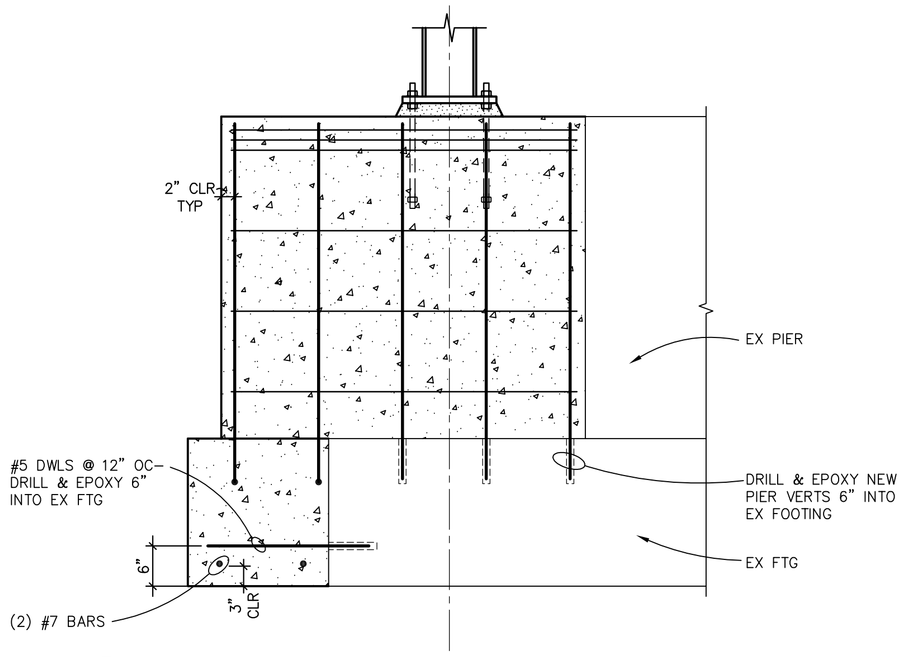

5 S201 FOOTING DETAIL
NOT TO SCALE

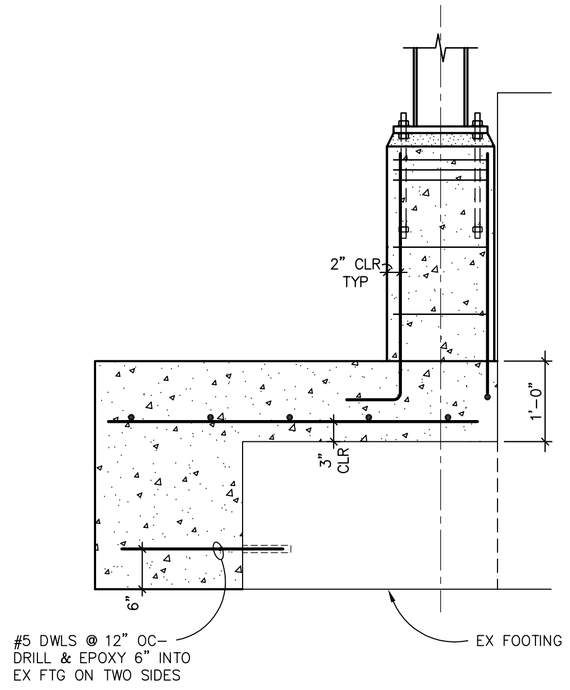

6 S201 FOOTING DETAIL
NOT TO SCALE

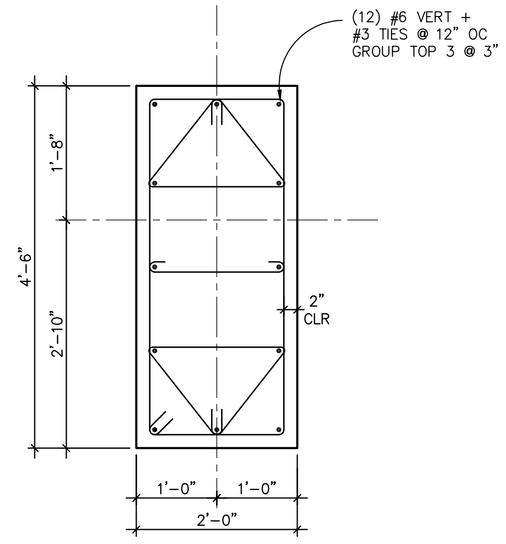

7 S201 PIER DETAIL – P2
NOT TO SCALE

VERTICAL BARS AND HORIZONTAL BOTTOM BARS– UNCOATED

BAR SIZE	DEVELOPMENT LENGTH (l_D)		LAP SPLICE LENGTH	
	CASE 1	CASE 2	CASE 1	CASE 2
#3	15"	22"	19"	28"
#4	19"	29"	25"	37"
#5	24"	36"	31"	47"
#6	29"	43"	37"	56"
#7	42"	63"	54"	81"
#8	48"	72"	62"	93"
#9	54"	81"	70"	105"
#10	61"	91"	79"	118"
#11	67"	101"	87"	131"

HORIZONTAL TOP BARS– UNCOATED

BAR SIZE	DEVELOPMENT LENGTH (l_D)		LAP SPLICE LENGTH	
	CASE 1	CASE 2	CASE 1	CASE 2
#3	19"	28"	25"	37"
#4	25"	37"	33"	49"
#5	31"	47"	41"	61"
#6	37"	56"	49"	73"
#7	54"	81"	71"	106"
#8	62"	93"	81"	121"
#9	70"	105"	91"	136"
#10	79"	118"	102"	153"
#11	87"	131"	114"	170"

NOTES:
1. HORIZONTAL BOTTOM BARS ARE HORIZONTAL BARS SO PLACED THAT 12" OR LESS OF FRESH CONCRETE IS CAST IN THE MEMBER BELOW THE DEVELOPMENT LENGTH OR SPLICE.
2. HORIZONTAL TOP BARS ARE HORIZONTAL BARS SO PLACED THAT MORE THAN 12" OF FRESH CONCRETE IS CAST IN THE MEMBER BELOW THE DEVELOPMENT LENGTH OR SPLICE.
3. CASE 1: CLEAR SPACING OF BARS BEING DEVELOPED OR SPLICED NOT LESS THAN d_b, CLEAR COVER NOT LESS THAN d_b, AND STIRRUPS OR TIES THROUGHOUT l_d NOT LESS THAN THE CODE MINIMUM OR CLEAR SPACING OF BARS BEING DEVELOPED OR SPLICED NOT LESS THAN $2d_b$ AND CLEAR COVER NOT LESS THAN d_b.
4. CASE 2: OTHER CASES.
5. MULTIPLY VALUES SHOWN BY 1.3 FOR LIGHTWEIGHT CONCRETE.

REINFORCEMENT DEVELOPMENT AND LAP SPLICE LENGTHS
NOT TO SCALE

FOOTING SCHEDULE

MARK	FOOTING SIZE	REINFORCING EW
F3.0	3'–0"x3'–0"x16"	(4) #4
F3.5	3'–6"x3'–6"x16"	(5) #4
F4.0	4'–0"x4'–0"x16"	(5) #4
F5.0	5'–0"x5'–0"x12"	(5) #5

JDH Structural Engineering
2011-02-007
3000 Ivanrest Avenue SW , Suite B
Grandville, Michigan 49418
P 616.531.6020 , F 616.531.8637

Consultant:

Chippewa County
City/County Building Renovation
325 Court Street
Sault Ste. Marie, MI 49783

Project Title:

Landmark Design Group, P.C.
3900 Linden Ave. S.E. Suite C, Grand Rapids, MI 49548-3406
v: (616) 955-0606

issued for:	date:
Bids and Permits	04-09-2012

Seal:

Project Number:

Landmark Project Number: 10-007

© 2010 Landmark Design Group P.C.

S201

ROOF FRAMING PLAN NOTES

1. Refer to arch for roof deck bearing elevation(s). Structure shall slope uniformly between points of unequal elevation.
2. Beams are equally spaced between grids or columns unless dimensioned otherwise.
3. Roof deck:
   a. UNO, roof deck shall be 1½" wide rib painted metal roof deck, 20 gauge, 3 span continuous (or equivalent).
   b. UNO, weld to supports shall be ⅝" puddle welds in a 36/4 pattern for 36" wide sheets and a 24/4 pattern for 24" wide sheets. Alternate: Fasten with powder activated fasteners at the same spacing (Hilti ENP2).
   c. UNO, sidelap fasteners shall be #10 Buildex Traxx screws (or equivalent) between supports, spaced at 36" on center for spans over 5'-0" in length. No fasteners required for spans less than 5'-0".
   d. UNO, at bearing ends of deck, weld deck edges to supports at each deck rib with ⅝" puddle weld.
   e. UNO, at deck edges where deck runs parallel, provide (2) ⅝" puddle welds at each joist or beam. Where a continuous steel support has been provided, weld to supporting member with ⅝" puddle welds at 12" OC.
   f. Lap ends of roof deck sheets 4" (min) over beams or joists.
5. Roof top mechanical equipment:
   a. Refer to Mechanical drawings for exact size, qty and location of mechanical equipment.
   b. Mechanical equipment weight shall be as indicated on plan and/or in mechanical equipment schedules. Any deviation or discrepancy in equipment weight, location or quantity shall be reported to the architect and structural engineer.
   c. Provide support framing under all mechanical unit curbs and around all roof penetrations.
8. DA indicates deck support angle. See "Typical Deck Support Angle" detail.
9. Refer to bearing plate schedule and notes for required bearing plates not specifically called out on the framing plan.
10. ⟷ indicates deck span direction.
11. UNO, CMU walls to be reinforced w/ #5's @ 40" oc.
12. Mech duct openings in existing conc slabs (poured or precast plank) must not be overcut to any extent.
13. Field locate opening so that the flanges of the concrete channel slab are not cut (ie – opening should be fully in the "web" of the channel)

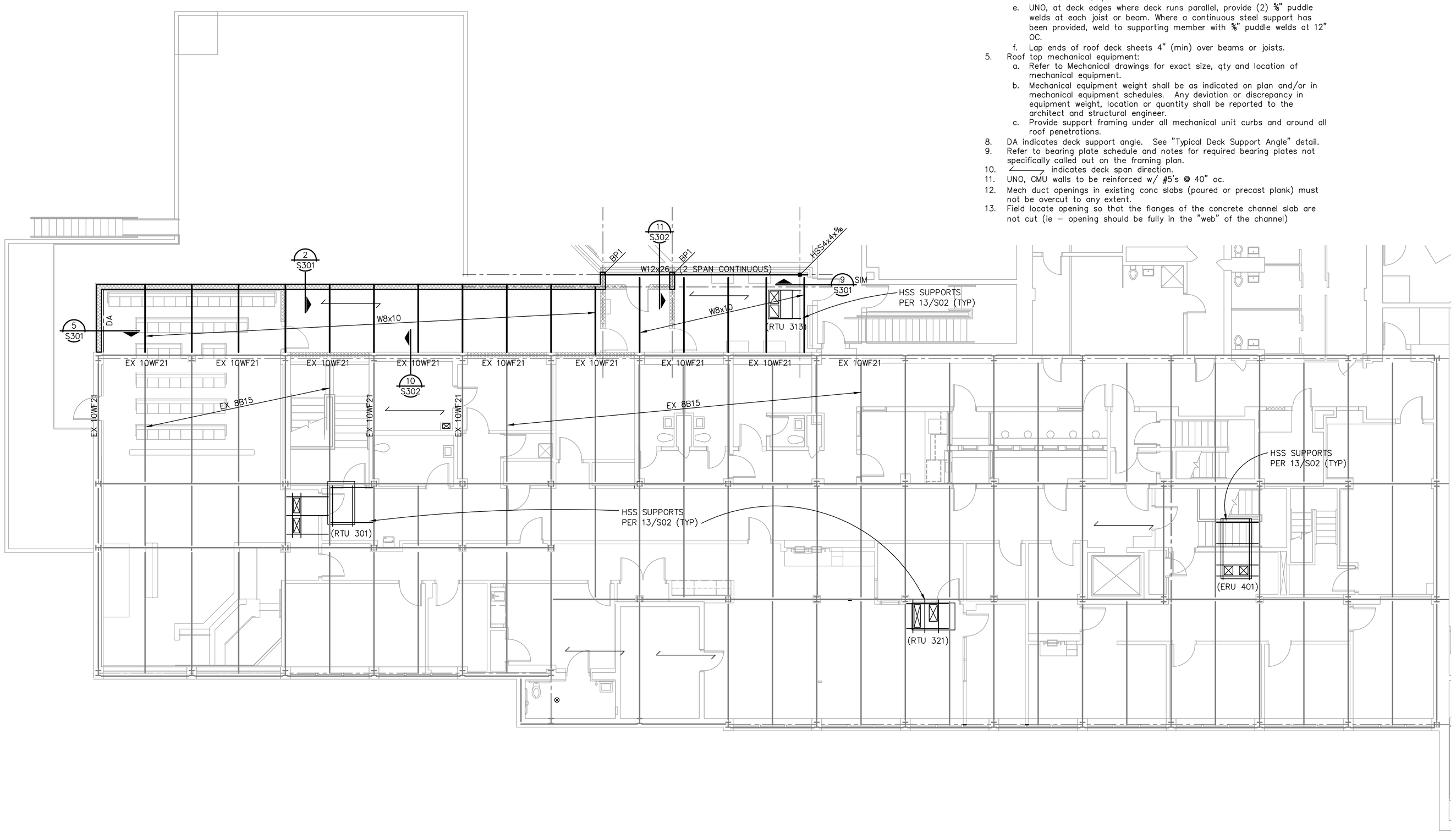

NORTH

ROOF FRAMING PLAN

1/8" = 1'-0"

EXISTING BUILDING:

E1. OPENINGS CUT THROUGH EXISTING CONCRETE CONSTRUCTION SHALL BE CORED OR BAR-CUT, AVOIDING ANY OVER CUTTING BEYOND THE CORNERS OF THE OPENINGS.
E2. OPENINGS IN EXISTING CONCRETE WALLS SHALL BE AT LEAST 12" AWAY FROM BEAM BEARING LOCATIONS.
E3. OPENINGS IN EXISTING FLOORS SHOULD BE FIELD LOCATED TO AVOID ALL EXISTING STEEL FRAMING (JOISTS, BEAMS, ETC)
E4. LOCATE E.F.'s BETWEEN FLANGES OF CHANNEL SLABS. DO NOT CUT VERTICAL LEGS OF CHANNELS. CLEAN-CUT TOP SLAB PORTION. BEAR E.F. FRAME FULLY ON FULL WIDTH OF CHANNEL SLAB.
E5. PROVIDE SUPPORT FRAMES FOR EACH RTU TO SUPPORT ALL FREE (CUT) EDGES OF CHANNEL SLABS. VERIFY SAFE AND ADEQUATE SUPPORT FOR SLABS. EXTEND SUPPORT TO FULLY CARRY RTU. REFER TO DETAIL 13/S302.
E6. ALL EXISTING STRUCTURAL INFORMATION, INCLUDING SIZES AND DIMENSIONS, SHALL BE FIELD VERIFIED. NOTIFY A/E IF ACTUAL CONDITIONS DIFFER FROM THE CONTRACT DOCUMENTS.

JDH Structural Engineering
2011-02-007
3000 Ivanrest Avenue SW , Suite B
Grandville, Michigan 49418
P 616.531.6020 , F 616.531.8637

Consultant:

Chippewa County
City/County Building Renovation
325 Court Street
Sault Ste. Marie, MI 49783

Project Title:

Landmark Design Group, P.C.
3900 Linden Ave. S.E. Suite C, Grand Rapids, MI 49548-3406
v: (616) 956-0606

date:	issued for:
04-09-2012	Bids and Permits

Seal:

Project Number:

Landmark Project Number:

10-007

© 2010 Landmark Design Group P.C.

S103

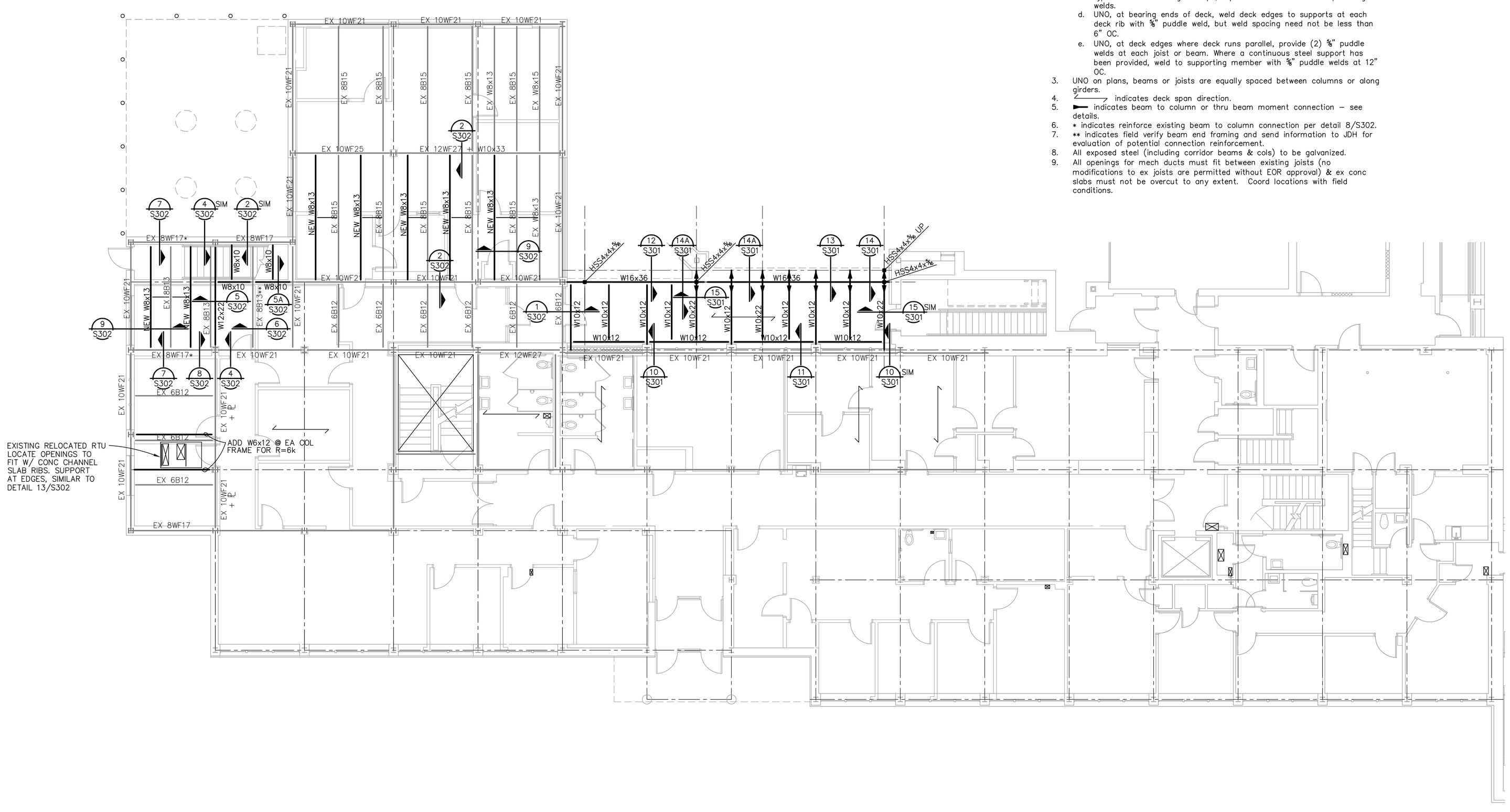

SECOND FLOOR FRAMING PLAN

1/8" = 1'-0"

NORTH

FLOOR FRAMING PLAN NOTES

1. UNO on plans, floor slab: 4" (total) normal weight concrete (2" concrete over top of deck). Reinforce slab with 6x6-W2.1xW2.1 WWF. Locate WWF in top 1/3 of slab where deck is composite and centered in concrete thickness above the top of metal deck where non-composite metal deck is used. Refer to arch for floor elevation(s).
2. Floor deck:
   a. UNO, floor shall be 2" composite, 22 gauge, galvanized metal deck, 3 span continuous (or equivalent).
   b. UNO, weld to supports shall be ⅝" puddle welds, 12" max OC.
   c. UNO, sidelap fasteners shall be #10 Buildex Traxx screws (or equivalent) between supports, spaced at 36" on center for spans over 5'-0" in length. No fasteners required for spans less than 5'-0". For all deck types with interlocking sidelaps, replace screws with button punching or welds.
   d. UNO, at bearing ends of deck, weld deck edges to supports at each deck rib with ⅝" puddle weld, but weld spacing need not be less than 6" OC.
   e. UNO, at deck edges where deck runs parallel, provide (2) ⅝" puddle welds at each joist or beam. Where a continuous steel support has been provided, weld to supporting member with ⅝" puddle welds at 12" OC.
3. UNO on plans, beams or joists are equally spaced between columns or along girders.
4. ⟷ indicates deck span direction.
5. ▬ indicates beam to column or thru beam moment connection – see details.
6. * indicates reinforce existing beam to column connection per detail 8/S302.
7. ** indicates field verify beam end framing and send information to JDH for evaluation of potential connection reinforcement.
8. All exposed steel (including corridor beams & cols) to be galvanized.
9. All openings for mech ducts must fit between existing joists (no modifications to ex joists are permitted without EOR approval) & ex conc slabs must not be overcut to any extent. Coord locations with field conditions.

EXISTING BUILDING:

E1. OPENINGS CUT THROUGH EXISTING CONCRETE CONSTRUCTION SHALL BE CORED OR BAR-CUT, AVOIDING ANY OVER CUTTING BEYOND THE CORNERS OF THE OPENINGS.
E2. OPENINGS IN EXISTING CONCRETE WALLS SHALL BE AT LEAST 12" AWAY FROM BEAM BEARING LOCATIONS.
E3. OPENINGS IN EXISTING FLOORS SHOULD BE FIELD LOCATED TO AVOID ALL EXISTING STEEL FRAMING (JOISTS, BEAMS, ETC)
E4. LOCATE E.F.'s BETWEEN FLANGES OF CHANNEL SLABS. DO NOT CUT VERTICAL LEGS OF CHANNELS. CLEAN-CUT TOP SLAB PORTION. BEAR E.F. FRAME FULLY ON FULL WIDTH OF CHANNEL SLAB.
E5. PROVIDE SUPPORT FRAMES FOR EACH RTU TO SUPPORT ALL FREE (CUT) EDGES OF CHANNEL SLABS. VERIFY SAFE AND ADEQUATE SUPPORT FOR SLABS. EXTEND SUPPORT TO FULLY CARRY RTU. REFER TO DETAIL 13/S302.
E6. ALL EXISTING STRUCTURAL INFORMATION, INCLUDING SIZES AND DIMENSIONS, SHALL BE FIELD VERIFIED. NOTIFY A/E IF ACTUAL CONDITIONS DIFFER FROM THE CONTRACT DOCUMENTS.

JDH Structural Engineering
2011-02-007
3000 Ivanrest Avenue SW , Suite B
Grandville, Michigan 49418
P 616.531.6020 , F 616.531.8637

Consultant:

Chippewa County
City/County Building Renovation
325 Court Street
Sault Ste. Marie, MI 49783

Project Title:

Landmark Design Group, P.C.
3900 Linden Ave. S.E. Suite C, Grand Rapids, MI 49548-3406
v: (616) 956-0606

date:	Issued for:
04-09-2012	Bids and Permits

Seal:

Project Number:

Landmark Project Number: 10-007

© 2010 Landmark Design Group P.C.

S102

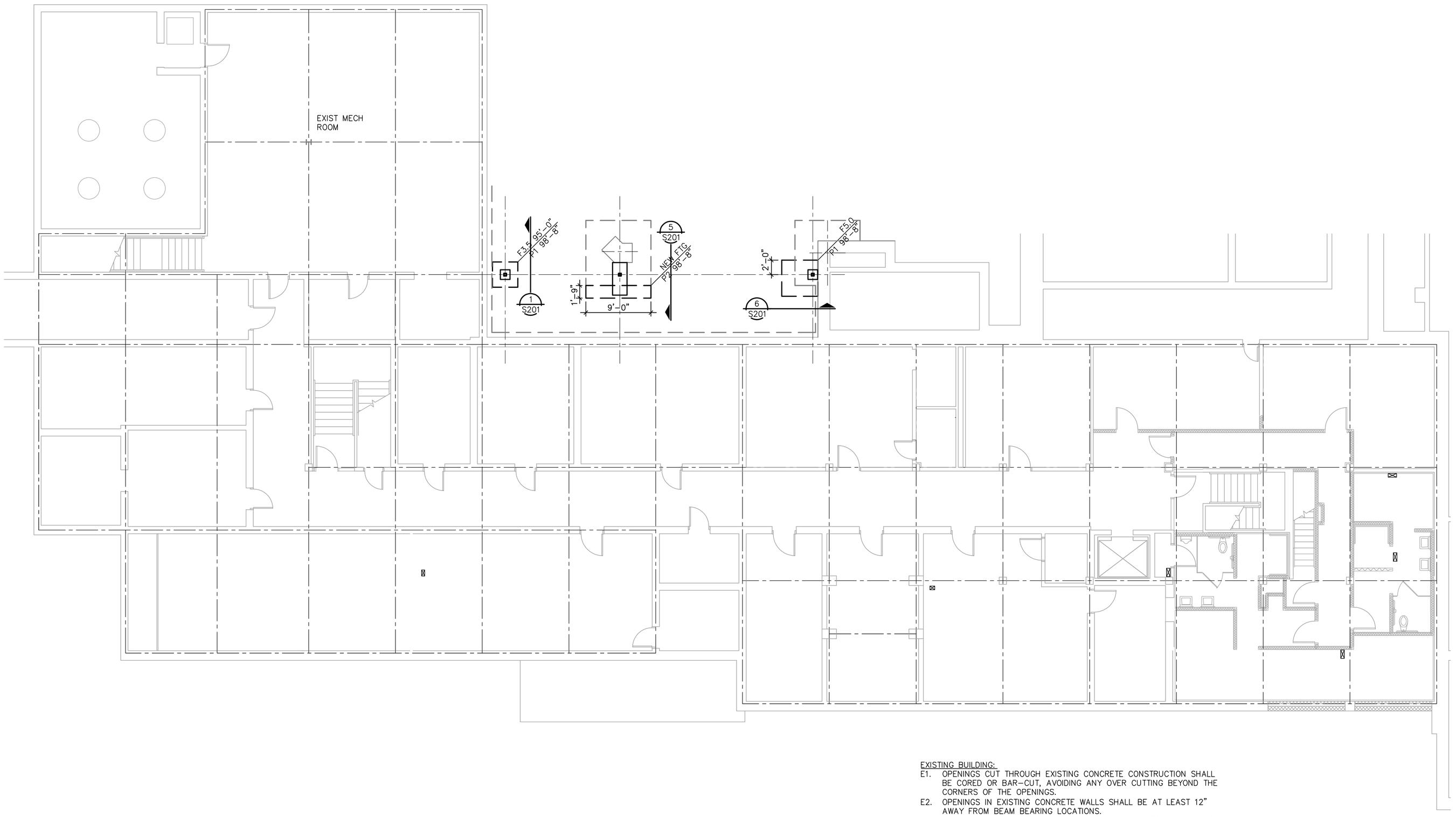

EXISTING BUILDING:

E1. OPENINGS CUT THROUGH EXISTING CONCRETE CONSTRUCTION SHALL BE CORED OR BAR-CUT, AVOIDING ANY OVER CUTTING BEYOND THE CORNERS OF THE OPENINGS.

E2. OPENINGS IN EXISTING CONCRETE WALLS SHALL BE AT LEAST 12" AWAY FROM BEAM BEARING LOCATIONS.

E3. OPENINGS IN EXISTING FLOORS SHOULD BE FIELD LOCATED TO AVOID ALL EXISTING STEEL FRAMING (JOISTS, BEAMS, ETC)

E4. LOCATE E.F.'s BETWEEN FLANGES OF CHANNEL SLABS. DO NOT CUT VERTICAL LEGS OF CHANNELS. CLEAN-CUT TOP SLAB PORTION. BEAR E.F. FRAME FULLY ON FULL WIDTH OF CHANNEL SLAB.

E5. PROVIDE SUPPORT FRAMES FOR EACH RTU TO SUPPORT ALL FREE (CUT) EDGES OF CHANNEL SLABS. VERIFY SAFE AND ADEQUATE SUPPORT FOR SLABS. EXTEND SUPPORT TO FULLY CARRY RTU. REFER TO DETAIL 13/S302.

E6. ALL EXISTING STRUCTURAL INFORMATION, INCLUDING SIZES AND DIMENSIONS, SHALL BE FIELD VERIFIED. NOTIFY A/E IF ACTUAL CONDITIONS DIFFER FROM THE CONTRACT DOCUMENTS.

NORTH

FOUNDATION PLAN

1/8" = 1'-0"

JDH Structural Engineering
2011-02-007
3000 Ivanrest Avenue SW , Suite B
Grandville, Michigan 49418
P 616.531.6020 , F 616.531.8637

Consultant:

Chippewa County
City/County Building Renovation
325 Court Street
Sault Ste. Marie, MI 49783

Project Title:

Landmark Design Group, P.C.
3900 Linden Ave. S.E. Suite C, Grand Rapids, MI 49548-3406
v: (616) 956-0606

date:	issued for:
04-09-2012	Bids and Permits

Seal:

Project Number:

Landmark Project Number:

10-007

© 2010 Landmark Design Group P.C.

S101

CONCRETE MASONRY NOTES

1. Concrete masonry units shall conform to ASTM C90, below grade units shall be medium or normal weight.
2. Mortar shall conform to ASTM C270, and shall be made with Type I portland cement/lime or mortar cement. Mortar shall be Type S.
3. Grout shall conform to ASTM C476, with a minimum compressive strength of 2000 psi.
4. Reinforcing bars shall conform to ASTM A615, Grade 60, unless noted.
5. Provide layout shop drawings indicating lap splices, rebar spacing, bond beams, grout lifts, etc.
6. Horizontal joint reinforcing (continuous wire reinforcing) shall be hot–dipped galvanized ladder type fabricated units with a single pair of 9 gage side rods and 9 gage cross rods at 16" oc fabricated from cold drawn steel wire complying with ASTM A82.
7. Horizontal joint reinforcing shall be spaced at 16" oc in all masonry walls and shall be lapped 8", unless noted otherwise on the drawings.
8. No chases, risers, conduits or toothing of masonry shall occur in masonry walls within 18" of centerline of beam bearing.
9. When a foundation dowel does not line up with a vertical block core it shall not be sloped more than 1 horizontal in 6 vertical. Dowels may be grouted into a cell adjacent to the vertical wall reinforcing.
10. Reinforcing shall be secured in place before grouting starts.
11. Vertical bars shall be held in position at top and bottom of grout lifts, and at intervals not exceeding 200 diameters of the reinforcing bar.
12. Vertical cells that will be grouted shall have a vertical alignment to maintain a continuous unobstructed cell area not less than 3" x 4".
13. If high lift grouting is selected, cleanouts shall be provided at the base of each reinforced cell and at intervals as prescribed by ACI 530.1 (Section 3.2F).
14. Consolidate grout lifts greater than 12" by mechanical means and reconsolidate by mechanical means after initial water loss and settlement. Lifts less than 12" may be consolidated by puddling or by mechanical means.
15. All bolts, anchors, etc. inserted into the walls shall be grouted solidly into position.
16. Provide "Dur–O–Stop" grout screens (or equal) to terminate grout pours over open cells below, such as at bond beams.
17. Coordinate bond beam locations with Architectural & Structural drawings.
18. The masonry has been engineered, and shall be inspected per Table 1704.5.1 nonessential facility of the Michigan Building Code 2009 (IBC 2009). Periodic inspection shall be performed daily with a minimum of one inspection for every 1,500 square feet or portion thereof.
19. Masonry has been designed and shall be built in conformance to ACI 530 (Building Code Requirements for Masonry Structures) and ACI 530.1 (Specifications for Masonry Structures).
20. Contractor shall design and provide all temporary bracing required for strength and stability of the masonry throughout construction. At a minimum, comply with OSHA and local requirements for temporary bracing of walls.

STRUCTURAL ABBREVIATION INDEX

AB	Anchor Bolt/Column Anchor Rod	ID	Inside Diameter
A/E	Architect/Engineer	IF	Inside Face
AESS	Architecturally Exposed Structural Steel	INT	Interior
AFF	Above Finished Floor	JB	Joist Bearing Elevation
ALT	Alternate	L	Lintel
AP	Anchor Plate	LAT	Lateral
ARCH	Architectural	LD	Load
B.O.	Bottom of	LF	Linear Foot
BB	Bond Beam	LG	Long
BFF	Below Finished Floor	LLH	Long Leg Horizontal
BL	Brick Ledge	LLV	Long Leg Vertical
BM	Beam	LOC'N	Location
BP	Bearing Plate	LP	Low Point
BRG	Bearing	LT	Light
BT	Bent	MAX	Maximum
℄	Centerline	MECH	Mechanical
CANT	Cantilever	MCJ	Masonry Control Joint
C/C	Center–to–Center	MIN	Minimum
CBP	Column Base Plate	NS	Near Side
CJP	Complete Joint Penetration Weld	NTS	Not To Scale
CJ	Construction Joint	O/O	Out–to–Out
CJ	Contraction Joint	OC	On–Center
CJ	Control Joint	OD	Outside Diameter
CLR	Clear	OF	Outside Face
CMU	Concrete Masonry Unit	OFD	Overflow Drain
COL	Column	OH	Opposite Hand
CONC	Concrete	P	Pier
CONN	Connection, Connect	PEMB	Pre–Engineered Metal Building
CONT	Continuous	PERP	Perpendicular
COORD	Coordinate	ℙ	Plate
DBE	Deck Bearing Elevation	PT	Pressure Treated
DA	Deck Angle	R, RAD	Radius
DB	Deck Bar	RD	Roof Drain
DIA, Ø	Diameter	Reference, Refer to	
DP	Deck Plate	REINF	Reinforce
DWG	Drawing(s)	REQ'D	Required
EA	Each	RMW	Reinforced Masonry Wall
EF	Each Face	RTU	Roof Top Unit
EL	Elevation	RXN	Reaction
EQ	Equal	SC	Slip Critical
ES	Each Side	SF	Step Footing
EW	Each Way	SIM	Similar
EX	Existing	SOG	Slab On Grade
EXP	Expansion	SPCS	Spaces
EXT	Exterior	SS	Stainless Steel
FD	Floor Drain	STL	Steel
FF	Finished Floor	T&B	Top and Bottom
FFE	Finished Floor Elevation	TCX	Top Chord Extension
FDN	Foundation	T.O.	Top of
FP	Foundation Pier	TOB	Top of Beam
FS	Far Side	TOF	Top of Footing
FTG, F	Footing	TOL	Top of Ledge
FV	Field Verify	TOM	Top of Masonry
GA	Gauge	TOS	Top of Steel
GALV	Galvanized	TOW	Top of Wall
GB	Grade Beam	TYP	Typical
GS	Grout Solid	UNO	Unless Noted Otherwise
GT	Girder Truss	VERT	Vertical
HD	Hold Down Anchor	w/	With
HORZ	Horizontal	w/o	Without
HP	High Point	WF	Wall Footing
HS	Headed Stud	WP	Working Point
HT	Height	WWF	Welded Wire Fabric

GENERAL STRUCTURAL NOTES

1. All work shall be performed in accordance with the contract documents. In case of a conflict within the contract documents, the more stringent condition shall govern, unless directed otherwise by the engineer of record. Prior to implementation, any discrepancies shall be reported to the architect for clarification.
2. In the event that certain details of construction are not indicated or noted in the drawings, details for similar conditions that are indicated or noted shall be utilized, subject to the structural engineer's approval.
3. Openings and penetrations through structural elements, and items embedded in structural elements that are not indicated in the structural drawings shall be reviewed by the structural engineer prior to fabrication, erection and/or construction.
4. Materials or equipment shall not be placed on unfinished floors or roofs in excess of 20 psf nor on finished floors in excess of the design live loads which are indicated in the structural drawings. Impact loading shall be avoided.
5. The structure has been designed for the in–service loads only. The methods, procedures and sequences of construction are the responsibility of the contractor. Contractor shall take all necessary precautions to maintain and ensure the integrity of the structure at all stages of construction. Contractor shall immediately notify the structural engineer of any condition which, in his opinion, might endanger the stability of the structure or cause distress in the structure.
6. All existing conditions and all related dimensions indicated in the contract documents shall be field verified prior to fabrication, erection and/or construction. Any condition that differs from that indicated in the contract documents shall be submitted to the architect for review prior to fabrication, erection and/or construction.
7. Provide special inspection in accordance with chapter 17 of the Michigan Building Code and with project specifications. In addition, the following categories of work shall require special inspection:
   - All post installed expansion or adhesive anchors.
   - Embeds.
   - All shop and field welding.
   - All bolted connections.
8. Post installed anchors shall be the specific product indicated. Where product substitutions are desired, they shall be submitted to engineer for review & approval a minimum of 2 weeks prior to planned installation. Adhesive anchors shall be installed using products that are approved by the supplier for all temperature considerations. Installation shall be in accordance with suppliers published installation instructions.

STEEL NOTES

1. Structural steel shall be finished as follows:
   a. Non–fireproofed interior steel shall be shop painted with min. 1.5 mil dry film thickness of a rust inhibiting primer.
   b. Unless noted otherwise, exterior exposed steel, including veneer relief angles, shall be galvanized and prepared for paint.
   c. Refer to lintel schedule for finish requirements of lintels.
2. K–series joists shall be welded to supporting members with minimum 1/8" x 1–1/2" fillet welds each side. LH–series shall be welded with 1/4" x 2" fillet welds each side and joist girders shall be welded with 1/4" x 2" fillet welds each side. K–series joists at columns shall be bolted with (2) 1/2"ø bolts. LH–series and joist girders shall be bolted with (2) 3/4"ø bolts.
3. Erector is to provide temporary bracing sufficient to hold frame in position until all construction necessary for building stability is complete.
4. Beam and lintel bearing on concrete and masonry wall shall be 8" unless otherwise shown. Provide beam bearing plates and wall anchors as required.
5. Camber beams upward the designated amount indicated on the structural drawings. Beams without a specified camber shall be oriented such that any incidental camber is upward.
6. Bolted connections not specified to be slip critical shall be tightened snug tight (all metal surfaces in contact). Slip critical joints shall be prepared with a Class A faying surface, and oversized holes in slip critical joints may be used at the fabricator's option.
7. Refer to specs. and Arch. drawings for all fireproofing requirements and UL assembly Nos. Beams and columns do not necessarily conform to minimum size requirements of the UL assembly. Adjust thickness of fireproofing as required based on (W/D) ratio as outlined in the latest edition of the "Fire Resistance Directory" by Underwriters" Laboratories, Inc. All beams and assemblies shall be considered unrestrained.
8. Steel fabricator shall increase radiused HSS member thickness as required to limit distortions due to fabrication processes. Thicknesses noted in contract documents represent minimum thickness for strength and serviceability.
9. Joist/deck supplier shall design, construct, and detail joist and deck per Factory Mutual guidelines or per information provided in contract documents, whichever is more restrictive. This includes, but is not limited to, deck attachment, joist uplift, and bridging requirements.
10. Unless otherwise shown on plans, provide lintels for masonry walls as follows:
    For 6" Walls
    (2)L3½x2½x⅜, spans to 6'–0"
    For each 4" of wall thickness:
    (1)L3½x3½x¼, SPANS TO 4'–0"
    (1)L4x3½x⅜, SPANS TO 6'–0"
    (1)L5x3½x⅜, SPANS TO 8'–0"

GENERAL FOUNDATION AND CONCRETE NOTES

1. Design soil bearing pressure is based on the geotechnical engineer's report by STS Consultants, Ltd., entitled "Subsurface Exploration and Geotechnical Engineering Evaluation (#24452)", dated February 1999.
2. Fill material shall be thoroughly compacted prior to placement of concrete. Fill under all slabs on grade shall be as recommended in the geotechnical report. If there is no geotechnical report, a minimum of 6" of well draining granular material shall be placed under all slabs on grade (UNO elsewhere in the construction documents).
3. Unless otherwise noted, a 15 mil, ASTM E 1745 Class A vapor barrier, with a permeability rate of 0.01 perms or lower, shall be placed under all slabs on grade after under floor work and compaction is complete. Seal all laps and penetrations. Turn up vapor barrier against wall at all slab edges.
4. All slabs on grade shall have contraction or construction joints at a maximum spacing of 24 times the slab thickness (spacing need not be less than 10'–0") each way, except as noted on the drawings. Maintain an aspect ratio of not more than 1.5. Coordinate joint locations with joints in flooring materials, such as tile, and with changes in floor finish material. Refer to details and specifications for additional information regarding slab joints.
5. Provide diagonal reinforcing (across each corner) of openings in foundation walls and slabs as follows: (1)–#4 x 44" for each 4" of concrete thickness.
6. Coordinate finish of all foundation work, including slabs on grade, with architectural and flooring supplier's requirements.
7. Lap all reinforcing as indicated in "Reinforcement Development and Lap Splice Lengths" detail. Provide corner bars for all horizontal reinforcing. Provide dowels from footing equal in size and number to vertical wall or pier reinforcing (UNO).
8. Cover for reinforcing shall be in accordance with ACI–318.
9. All exposed edges of concrete piers, beams, and walls shall be chamfered ¾" x 45 degrees.
10. Provide beam pockets in foundation walls where needed. Fill pockets with concrete after beams are set.
11. Grade beams and walls that retain earth on both sides shall be backfilled on both sides simultaneously.
12. Do not backfill earth retaining walls until concrete has reached 75% of its required 28 day strength, and all bracing elements are in place (lower and upper floors).
13. Coordinate placement of column anchor rods with foundation reinforcing. All column anchor rods shall be installed using templates and setting drawings. No tilted or misplaced bolts will be accepted. Notify Architect/Engineer for approval of any corrective action. Tolerances for the installation of the anchor bolts shall be in accordance with AISC "Code of Standard Practice" guidelines.
14. Welded wire fabric shall conform to ASTM A185. Wire fabric reinforcement must lap one full mesh plus 2" at side and end laps, but not less than 6", and shall be wire tied together.
15. Anchors for embedded plates shall be as shown on the drawings. Headed studs shall conform to ASTM A108 with 60,000psi minimum tensile strength. Reinforcing bars to be welded to plates shall be ASTM A615 Grade 40 or ASTM A706 Grade 60.
16. Refer to "General Structural Notes" for information regarding special inspections and installation of post installed anchors.

CONCRETE MIX GUIDELINES

Footings and Foundations	
f'c	3500 psi (Min)
Slump	4 inch ± 1 inch
Large Aggregate	1 inch
4" Slabs–on–grade – Interior	
Water/Cement Ratio	0.45 (this must be held: Note 3)
Slump	3 inch ± 1 inch
Large Aggregate	1 inch
f'c	3500 psi (Minimum)
Fibrous Reinforcing	1–1/2 lb/yd
Elevated Slabs	
f'c	3500 psi (Min)
Slump	3" ± 1"
Large Aggregate	5/8 inch
Fibrous Reinforcing	1–1/2 lb/yd
Exterior Concrete	
f'c	4000 psi
Cementitious Material (Min)	564 lbs/yd
Slump	3 inch ± 1 inch
Large Aggregate	1 inch (Crushed Limestone)
Air	6% +or– 1%

1. In footings and foundation concrete 25% flyash or 30% ground blast furnace slag is acceptable. A minimum of 30% ground blast furnace slag is recommended for interior slabs.
2. Aggregates shall be clean uniformly graded from coarse to fine.
3. Water–reducing admixtures may be used to maintain water/cement ratio AND workability– note that this may affect finishing procedures.
4. Coordinate admixtures and curing measures to be compatible with flooring materials and adhesives.

ENGINEERING DATA

Design soil bearing pressure	2500 psf
Design stresses	
Concrete	
Footings and Foundations	f'c = 3500 psi
Elevated slabs	f'c = 3500 psi
Grade slabs	f'c = 3500 psi
Exterior concrete (6% air)	f'c = 4000 psi
Reinforcing steel	Fy = 60000 psi
Steel	
W shapes	Fy = 50000 psi
Tube shapes (A500)	Fy = 46000 psi
All other shapes	Fy = 36000 psi
Structural bolts	ASTM A325
Anchor bolts/Column anchor rods	ASTM F 1554 – Grade 36
Welding electrode	E70XX
Masonry	
CMU	f'm = 1500 psi
Structural design requirements	
Floor live load (LL reductions used where permitted by code)	
Office	80 psf
Corridors above 1st floor	80 psf
Storage	250 psf
Roof live load	20 psf
Occupancy Category	III
Roof snow load	
Ground snow load (Pg)	70 psf
Flat roof snow load (Pf)	50 psf + Drift
Snow exposure (Ce)	0.9
Snow load importance factor (I)	1.1
Thermal factor (Ct)	1.0
Wind Load	
Basic wind speed (3 sec)	90 mph
Wind importance factor (I)	1.0/1.15
Wind exposure	B
Internal pressure coeff (GCpi)	0.18
Components & cladding (varies)	
Wall stud design pressure	25 psf
Specific Design Loads	
Mech Floor dead loads	
Slab & deck	35
Structure	5
M/E/P & Misc	10
	50 psf Total
Corridor Floor dead loads	
Slab & deck	40
Structure	5
Misc	5
	50 psf Total
Ex Roof dead loads	40 psf Total
New Roof dead loads	
Roofing (Adhered)	2
Insulation	4
Metal deck	3
Structure	5
Ceiling	3
M/E/P	3
Misc	15
	35 psf Total
Design codes	
General building code	Michigan Building Code 2009
Concrete	ACI 318
Steel	AISC 360 – ASD
Masonry	ACI 530/ASCE 5
Wood	NDS

JDH Structural Engineering
2011-02-007
3000 Ivanrest Avenue SW , Suite B
Grandville, Michigan 49418
P 616.531.6020 , F 616.531.8637

Consultant:

Chippewa County
City/County Building Renovation
325 Court Street
Sault Ste. Marie, MI 49783

Project Title:

Landmark Design Group, P.C.
3900 Linden Ave. S.E. Suite C, Grand Rapids, MI 49548-3406
v: (616) 956-0606

date:	issued for:
04-09-2012	Bids and Permits

Seal:

Project Number:

Landmark Project Number: 10-007

© 2010 Landmark Design Group P.C.

S001

GENERAL NOTES

1. REFER TO SPECIFICATIONS FOR MATERIALS AND EQUIPMENT REQUIREMENTS.
2. COORDINATE WORK WITH ALL OTHER TRADES BEFORE INSTALLATION TO ELIMINATE CONFLICTS.
3. THE CONTRACTOR SHALL TAKE STEPS TO DETERMINE ACTUAL LOCATION OF UNDER FLOOR PIPING BEFORE CUTTING EXISTING FLOORS TO INSTALL NEW WORK.

KEYED NOTES

1. CUT AND PATCH EXISTING FLOOR TO ALLOW INSTALLATION OF NEW UNDERFLOOR WORK.
2. ⅜" PLASTIC DOWN FROM TRAP PRIMER, THEN TO FLOOR DRAIN.

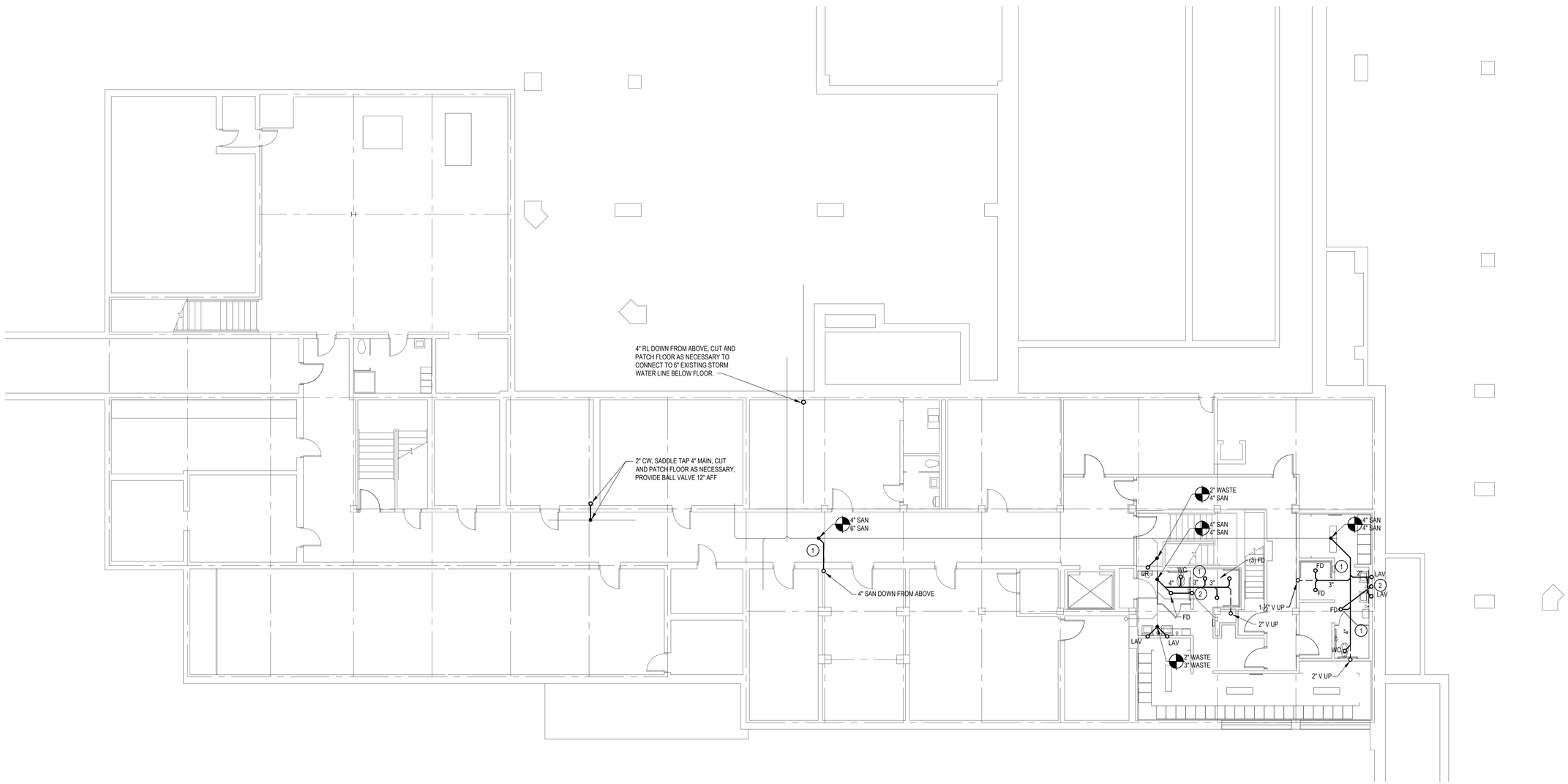

CALLED NORTH

PLUMBING FOUNDATION FLOOR PLAN

1/8" = 1' - 0"

MORGAN M. LANDON, PE, LLC
2054 Brandon Drive NW
Grand Rapids, Michigan 49504
616-608-3372 fax 616-608-3372
morgan@mlandon.com

Consultant:

Chippewa County
City / County Building Renovation
325 Court Street
Sault Saint Marie, Michigan 49783

Project Title:

Landmark Design Group, P.C.
3900 Linden Ave. S.E. Suite C, Grand Rapids, MI 49548-3406
v: (616) 956-0606

date:	issued for:
04-09-2012	Bids and Permits

Seal:

Project Number:

Landmark Project Number:

10-007

© 2012 Landmark Design Group P.C.

P000

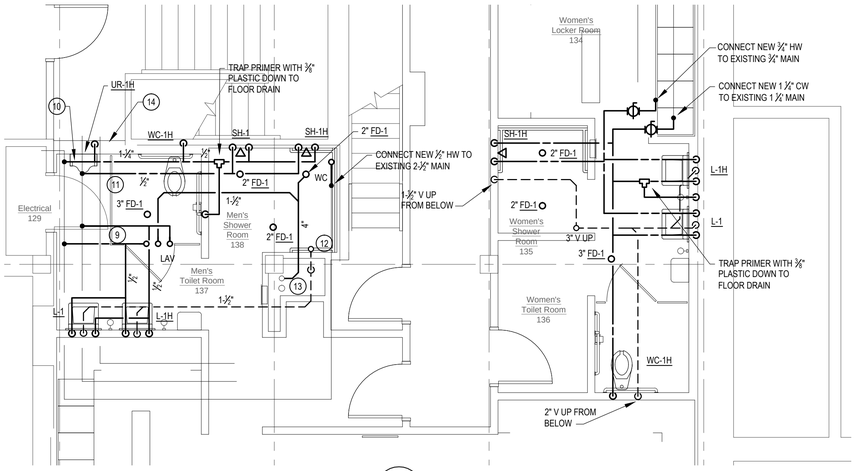

2 P100

Enlarged Plan of Toilet Rooms

1/4" = 1' - 0"

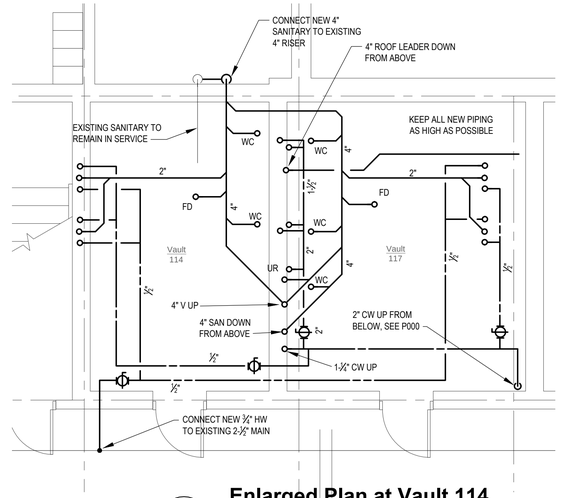

1 P100

Enlarged Plan at Vault 114 and Vault 117

1/4" = 1' - 0"

GENERAL NOTES

1. REFER TO SPECIFICATIONS FOR MATERIALS AND EQUIPMENT REQUIREMENTS.
2. COORDINATE WORK WITH ALL OTHER TRADES BEFORE INSTALLATION TO ELIMINATE CONFLICTS.
3. VERTICAL SPACE IS EXTREMELY LIMITED, COORDINATE ROUTES SHOWN ON PLAN WITH EXISTING PIPING TO REMAIN, AS WELL AS OTHER NEW FEATURES SUCH AS LIGHTING, BEFORE INSTALLATION.
4. KEEP ALL NEW PIPING AS HIGH AS POSSIBLE, INCLUDE ADDITIONAL OFFSETS AS MAY BE NECESSARY TO ACCOMPLISH THIS GOAL.

KEYED NOTES

1. VENT RISER TO REMAIN, SEE P101.
2. NOT USED.
3. NOT USED.
4. NEW 4" ROOF LEADER DOWN FROM ABOVE, SEE P101.
5. ELEVATOR SUMP TO REMAIN IN SERVICE.
6. CONNECT NEW 1-¼" CW TO EXISTING 2" CW RISER AT THIS LOCATION.
7. CLOSELY COORDINATE LOCATION OF NEW PIPING WITH EXISTING PIPING TO REMAIN.
8. NOT USED.
9. CONNECT NEW ½" H&CW TO EXISTING 2-½" CW AND 1-¼" HW MAINS, PROVIDE BALL VALVE AT EACH CONNECTION.
10. CONNECT NEW 1-½" CW TO EXISTING 2-½" MAIN, PROVIDE BALL VALVE AT CONNECTION.
11. CONNECT NEW ½" HW TO EXISTING 1-½" MAIN, PROVIDE BALL VALVE AT CONNECTION.
12. 2" VENT UP FROM BELOW, OFFSET AS HIGH AS POSSIBLE AND CONTINUE TO RISE.
13. 4" SANITARY TO CONNECT TO EXISTING 4" SANITARY RISER TO REMAIN IN SERVICE.
14. OFFSET 1 ½" VENT RISER FROM URINAL IN WALL TO THIS LOCATION, CONTINUE TO RISE THROUGH WALL ABOVE.

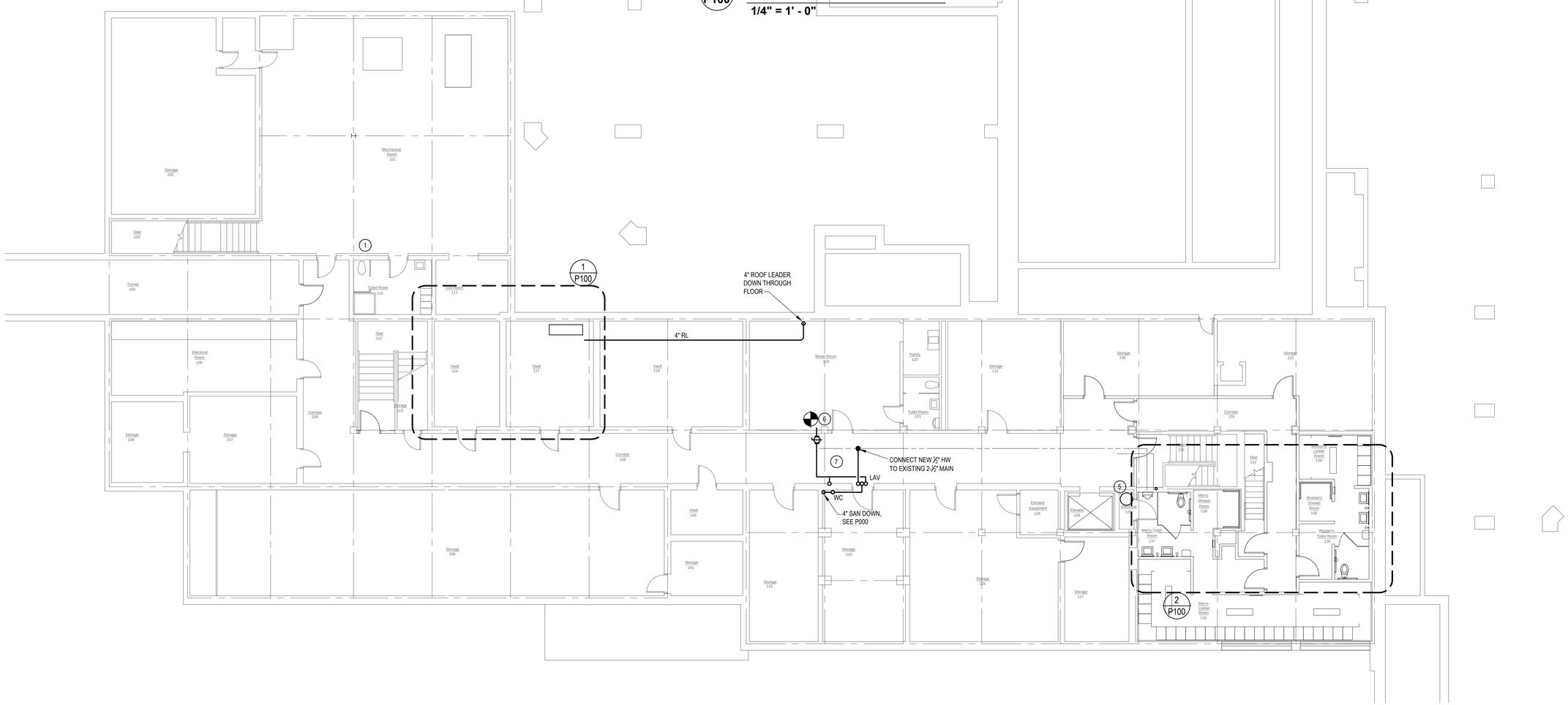

PLUMBING BASEMENT FLOOR PLAN

1/8" = 1' - 0"

CALLED NORTH

MORGAN M. LANDON, PE, LLC
2054 Brandon Drive NW
Grand Rapids, Michigan 49504
616-608-3372 fax 616-608-3372
morgan@mlandon.com

Consultant:

Chippewa County
City / County Building Renovation
325 Court Street
Sault Saint Marie, Michigan 49783

Project Title:

Landmark Design Group, P.C.
3900 Linden Ave. S.E. Suite C, Grand Rapids, MI 49548-3406
v: (616) 956-0606

date:	issued for:
04-09-2012	Bids and Permits

Seal:

Project Number:

Landmark Project Number:

10-007

© 2012 Landmark Design Group P.C.

P100

GENERAL NOTES

1. REFER TO SPECIFICATIONS FOR MATERIALS AND EQUIPMENT REQUIREMENTS.
2. COORDINATE WORK WITH ALL OTHER TRADES BEFORE INSTALLATION TO ELIMINATE CONFLICTS.
3. CEILING SPACE IS EXTREMELY LIMITED. CLOSE COORDINATION AMONGST THE TRADES WILL BE REQUIRED.

KEYED NOTES

1. NOT USED.
2. NOT USED.
3. NOT USED.
4. REMOVE EXISTING EWC AND REPLACE WITH NEW, CONNECT TO EXISTING PIPING TO REMAIN IN SERVICE.
5. CONNECT NEW FIXTURES TO EXISTING PIPING AS NOTED ON ME101, ADJUST CONNECTION LOCATIONS AS MAY BE REQUIRED TO MEET CURRENT ADA CODES.

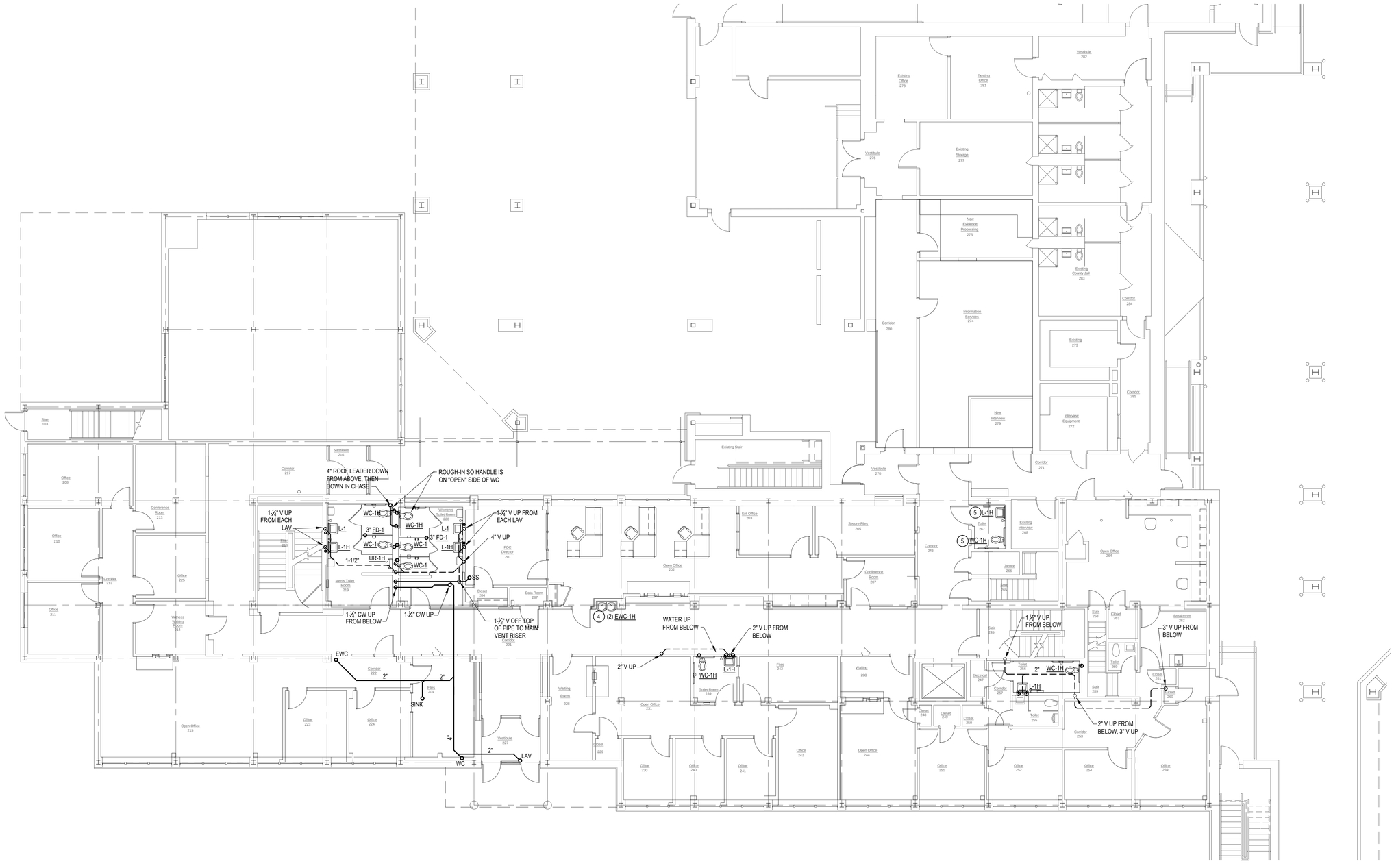

CALLED NORTH

PLUMBING FIRST FLOOR PLAN

1/8" = 1' - 0"

MORGAN M. LANDON, PE, LLC
2054 Brandon Drive NW
Grand Rapids, Michigan 49504
616-608-3372 fax 616-608-3372
morgan@mlandon.com

Consultant:

Chippewa County
City / County Building Renovation
325 Court Street
Sault Saint Marie, Michigan 49783

Project Title:

Landmark Design Group, P.C.
3900 Linden Ave. S.E. Suite C, Grand Rapids, MI 49548-3406
v: (616) 956-0606

date:	issued for:
04-09-2012	Bids and Permits

Seal:

Project Number:

Landmark Project Number: 10-007

© 2012 Landmark Design Group P.C.

P101

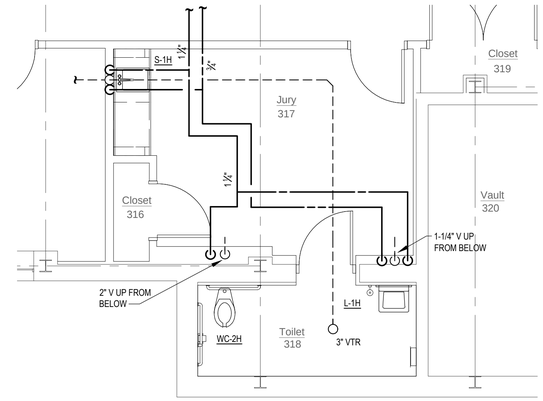

1
P102

Enlarged Plan at Toilet 318

1/4" - 1' - 0"

GENERAL NOTES

1. REFER TO SPECIFICATIONS FOR MATERIALS AND EQUIPMENT REQUIREMENTS.
2. COORDINATE WORK WITH ALL OTHER TRADES BEFORE INSTALLATION TO ELIMINATE CONFLICTS.

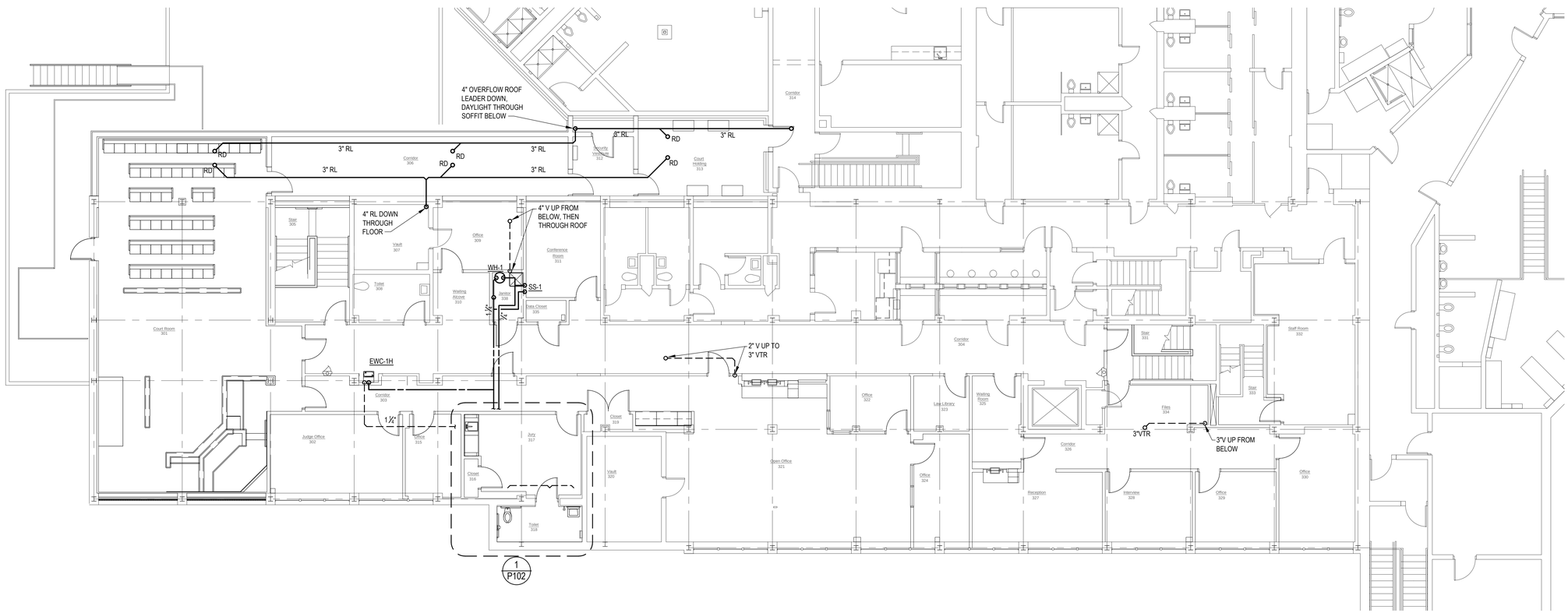

1
P102

PLUMBING SECOND FLOOR PLAN

1/8" = 1' - 0"

CALLED NORTH

MORGAN M. LANDON, PE, LLC
2054 Brandon Drive NW
Grand Rapids, Michigan 49504
616-608-3372 fax 616-608-3372
morgan@mlandon.com

Consultant:

Chippewa County
City / County Building Renovation
325 Court Street
Sault Saint Marie, Michigan 49783

Project Title:

Landmark Design Group, P.C.
3900 Linden Ave., S.E. Suite C, Grand Rapids, MI 49548-3406
v: (616) 956-0606

date:	issued for:
04-09-2012	Bids and Permits

Seal:

Project Number:

Landmark Project Number:

10-007

© 2012 Landmark Design Group P.C.

P102

GENERAL NOTES

1. ALL SYSTEMS AND INSTALLATION SHALL CONFORM TO ALL APPLICABLE CODE REQUIREMENTS.
2. ALL DRAWINGS ARE DIAGRAMMATIC IN NATURE, AND ARE NOT INTENDED TO SHOW EVERY JOINT, FITTING, OR OFFSET THAT MAY BE REQUIRED TO PROPERLY COMPLETE THE SYSTEM. THE CONTRACTOR SHALL COORDINATE THE INSTALLATION WITH ALL TRADES, AND PROVIDE ALL FITTINGS, OFFSETS, AND RE-ROUTING AS MAY BE REQUIRED.
3. THE COMPLETED INSTALLATION SHALL RESULT IN PROPERLY OPERATING SYSTEMS.
4. THE CONTRACTOR SHALL OBTAIN AND PAY FOR ALL REQUIRED PERMITS AND INSPECTIONS AS A PART OF HIS BASE BID FOR THE PROJECT.
5. UNLESS OTHERWISE NOTED, ALL HORIZONTAL PORTIONS OF SYSTEMS SHOWN ARE INTENDED TO BE CONCEALED ABOVE CEILINGS. VERTICAL PORTIONS ARE INTENDED TO BE CONCEALED INSIDE WALLS OR CHASES.
6. ALL FLOOR PENETRATIONS SHALL BE SEALED TO PROVIDE THE REQUIRED FIRE RATING FOR THE FLOOR ASSEMBLY.
7. PROVIDE ROUGH-IN AND CONNECTION TO ALL FIXTURES AND EQUIPMENT.
8. PENETRATIONS THROUGH FIRE AND/OR SMOKE BARRIERS SHALL BE SEALED TO MAINTAIN THE RATING OF THE BARRIER.

PLUMBING SYMBOLS

SYMBOL	DESCRIPTION	SYMBOL	DESCRIPTION
	SOIL OR WASTE PIPE	RD	ROOF DRAIN
	VENT PIPE(V)		PRESSURE GAGE
	COLD WATER (CW)		THERMOMETER
	HOT WATER (HW)	M	WATER METER
	HOT WATER RETURN (HWR)		PRESSURE REDUCING VALVE
T	TEMPERED HOT WATER LINE (THW)		GAS COCK
G	NATURAL GAS PIPE	VTR	VENT THROUGH ROOF
ST	STORM DRAIN PIPE	LAV	LAVATORY
FD	FLOOR DRAIN	WC	WATER CLOSET
CO	CLEAN-OUT(FLOOR)	UR	URINAL
WCO	CLEAN-OUT(WALL)	EWC	ELECTRIC WATER COOLER
WH	WATER HEATER	SH	SHOWER
	BALL VALVE		SWING CHECK VALVE
	GATE VALVE		BALANCE VALVE
	UNION		
NEW EXIST	CONNECT TO EXISTING AT THIS LOCATION		

PLUMBING FIXTURE CONNECTIONS

FIXTURE	W	V	HW	CW	REMARKS
WC	4"	2"	--	1"	--
UR	1-½"	1-¼"	--	¾"	--
LAV	1-¼"	1-¼"	½"	½"	--
SINK	1-½"	1-¼"	½"	½"	--
EWC	1-¼"	1-¼"	--	½"	--
SS	3"	1-½"	½"	½"	--
SCU	4"	2"	½"	1-¼"	--

ROUGH-IN TO EACH FIXTURE SHALL BE AS INDICATED ABOVE UNLESS SPECIFICALLY NOTED TO THE CONTRARY.

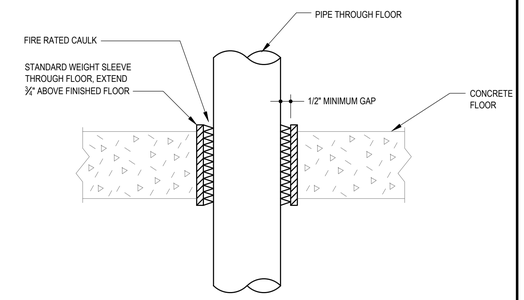

4 P150 **PIPE SLEEVE THROUGH FLOOR**
NO SCALE

ABBREVIATIONS

AC	AIR CONDITIONING	FA	FREE AREA	NIC	NOT IN CONTRACT
AD	ACCESS DOOR	FC	FAN COIL UNIT	OA	OUTSIDE AIR
AFF	ABOVE FINISHED FLOOR	FD	FIRE DAMPER	OAI	OUTSIDE AIR INTAKE
AHU	AIR HANDLING UNIT	FLR	FLOOR	OAT	OUTSIDE AIR TEMPERATURE
AL	ACOUSTICAL LINING	FOB	FLAT ON BOTTOM	OC	ON CENTER
AP	ACCESS PANEL	FOT	FLAT ON TOP	OD	OUTSIDE DIAMETER
EBB	ELECTRIC BASEBOARD RADIATION	FP	FIRE PUMP	PC	PLUMBING CONTRACTOR
B	BOILER	FPM	FEET PER MINUTE	PRV	PRESSURE REDUCING VALVE
BDD	BACK DRAFT DAMPER	FT	FINNED TUBE	PTAC	PACKAGED TERMINAL AIR CONDITIONER
BFC	BELOW FINISHED CEILING	G	GAS	RA	RETURN AIR
BOB	BOTTOM OF BEAM	GC	GENERAL CONTRACTOR	RHC	REHEAT COIL
BOD	BOTTOM OF DUCT	GPH	GALLONS PER HOUR	RF	RETURN FAN
BOP	BOTTOM OF PIPE	GPM	GALLONS PER MINUTE	RL	ROOF LEADER
CFM	CUBIC FEET PER MINUTE	HP	HEAT PUMP	SA	SUPPLY AIR
CO	CLEAN OUT	HW	HOT WATER	SD	SMOKE DAMPER
CW	COLD WATER	HWR	HOT WATER RETURN	SEF	SMOKE EXHAUST FAN
CU	CONDENSING UNIT	HX	HEAT EXCHANGER	SF	SUPPLY FAN
CUH	CABINET UNIT HEATER	HZ	HERTZ	SP	STATIC PRESSURE
DB	DRY BULB	ID	INSIDE DIAMETER	TG	TRANSFER GRILLE
DS	DUCT SILENCER	LAT	LEAVING AIR TEMPERATURE	TYP	TYPICAL
EAT	ENTERING AIR TEMPERATURE	LWT	LEAVING WATER TEMPERATURE	UH	UNIT HEATER
EC	ELECTRICAL CONTRACTOR	LD	LINEAR DIFFUSER	UON	UNLESS OTHERWISE NOTED
ECS	EVAPORATIVE COOLER SUPPLY	LF	LINEAR FEET	VAV	VARIABLE AIR VOLUME UNIT
ECR	EVAPORATIVE COOLER RETURN	MC	MECHANICAL CONTRACTOR	VD	VOLUME DAMPER
EF	EXHAUST FAN	MTD	MOUNTED	VTR	VENT THRU ROOF
EJ	EXPANSION JOINT	MOD	MOTOR OPERATED DAMPER	WB	WET BULB
ESP	EXTERNAL STATIC PRESSURE	MUA	MAKE-UP AIR UNIT	WMS	WIRE MESH SCREEN
ET	EXPANSION TANK	NC	NORMALLY CLOSED		
EWT	ENTERING WATER TEMPERATURE	NO	NORMALLY OPEN		
EWC	ELECTRIC WATER COOLER				

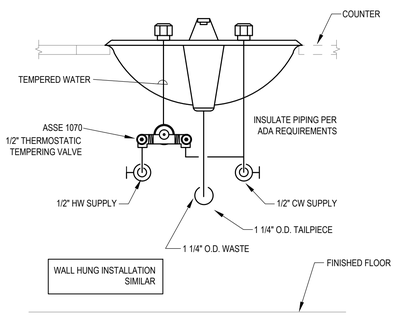

3 P150 **LAVATORY TEMPERING VALVE INSTALLATION**
NO SCALE

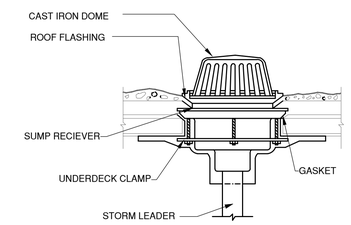

2 P150 **ROOF DRAIN**
NO SCALE

EQUIPMENT ABBREVIATIONS

AB	AIR BLENDER	ERC	ENERGY RECLAIM COIL	PRV	PRESSURE REDUCING VALVE
AC	AIR CONDITIONING UNIT	ET	EXPANSION TANK	PS	PRESSURE SWITCH
AFM	TERMINAL AIR FILTER MODULE	EUH	ELECTRIC UNIT HEATER	R	REFRIGERATION
AHU	AIR HANDLING UNIT	F	FILTER	RAF	RETURN AIR FAN
AM	AIR MEASURING DEVICE	FC	FAN COIL UNIT	RAH	RADIANT HEATER
AWS	AUTO WATER STRAINER	FM	FLOW METER	RD	RUPTURE DISC
B	BOILER	FT	FLASH TANK	RF	RELIEF AIR FAN
BFS	BOILER FEED SET	H	HUMIDIFIER	RH	REHEAT COIL
CC	COOLING COIL	HC	HEATING COIL	RV	RELIEF VALVE
CF	CHEMICAL FEED UNIT	HE	HEAT EXCHANGER	RCF	RECIRCULATION AIR FAN
CT	COOLING TOWER	HP	HEAT PUMP	SF	SUPPLY FAN
CTF	COOLING TOWER FILTER	HRU	HEAT RECOVERY UNIT	SRV	SAFETY RELIEF VALVE
CU	CONDENSING UNIT	HWC	HOT WATER CONVERTOR	ST	STORAGE TANK
CUH	CABINET UNIT HEATER	IRH	INFARED HEATER	STP	SOUND TRAP
CV	AUTOMATIC CONTROL VALVE	LFM	LAMINAR FLOW MODULE	TU	TERMINAL AIR UNIT
D	AUTOMATIC DAMPER	MB	MIXING BOX	TAF	TERMINAL AIR FILTER
DCR	DRY COOLER	OAI	OUTSIDE AIR INTAKE	TF	TRANSFER FAN
DC	DUST COLLECTOR	P	PUMP	UH	UNIT HEATER
EBR	ELECTRIC BASEBOARD RADIATION	PH	PREHEAT COIL	WF	WATER FILTER
EDH	ELECTRIC DUCT HEATER	PHE	PENTHOUSE	WS	WATER SOFTENER
EF	EXHAUST FAN				

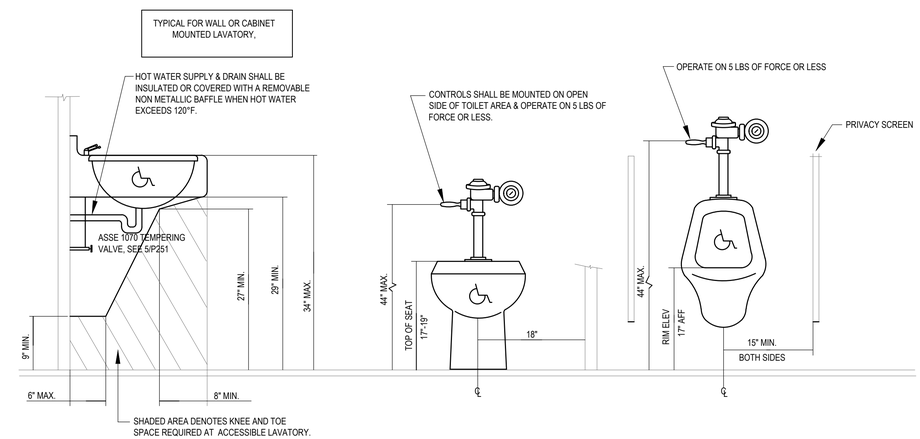

1 P150 **BARRIER FREE PLUMBING FIXTURE INSTALLATION**
NO SCALE

MORGAN M. LANDON, PE, LLC
2054 Brandon Drive NW
Grand Rapids, Michigan 49504
616-608-3372 fax 616-608-3372
morgan@mlandon.com
Consultant:

Chippewa County
City / County Building Renovation
325 Court Street
Sault Saint Marie, Michigan 49783
Project Title:

Landmark Design Group, P.C.
3900 Linden Ave. S.E. Suite C, Grand Rapids, MI 49548-3406
v: (616) 956-0606

date:	issued for:
04-09-2012	Bids and Permits

Seal:

Project Number:

Landmark Project Number:
10-007

© 2012 Landmark Design Group P.C.

P150

HOT WATER FINNED TUBE RADIATION SCHEDULE 1,2,3

UNIT NO.	LENGTH, FT.		CAPACITY MBH	GPM	REMARKS
	FIN TUBE	ENCLOSURE (APPROX)			
FT-223	6	10	6	0.6	W/W
FT-224	6	10	6	0.6	W/W
FT-228	3.5	7	3.5	0.4	W/W
FT-230	4	8	4	0.4	W/W
FT-240	4	8	4	0.4	W/W
FT-241	4	8	4	0.4	W/W
FT-301A	4	7	4	0.4	W/E
FT-301B	3	5	3	0.3	W/E
FT301C	6	--	6	0.6	--
FT-315	4	8	4	0.4	W/W
FT-318	4	6	4	0.4	W/E
FT-324	4	8	4	0.4	W/W

ALL BASED ON VULCAN DURA VANE DV4. NOMINAL 12" HIGH CABINET, NOMINAL 1000 BTU/LF OUTPUT. MOUNT BOTTOM OF COVER JUST ABOVE BASE.

ALL PROVIDE ACCESS PANEL, OR EASILY REMOVABLE SECTIONS OF COVER AS NECESSARY FOR PROPER ACCESS TO VALVES.

ALL BASED ON 180 EWT, 160 LWT.

1. UN-INSULATED RETURN WITHIN COVER.

W/W = WALL TO WALL

IC = INSIDE CORNER

OC = OUTSIDE CORNER

W/E = WALL TO END

E/E = END TO END

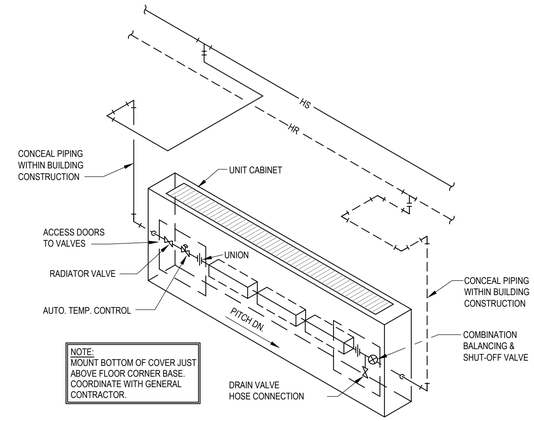

1 M100

TYPICAL FIN TUBE RADIATION PIPING (FOR NEW ITEMS)

NO SCALE

GENERAL NOTES

1. REFER TO SPECIFICATIONS FOR MATERIALS AND EQUIPMENT REQUIREMENTS.
2. COORDINATE WORK WITH ALL OTHER TRADES BEFORE INSTALLATION TO ELIMINATE CONFLICTS.

KEYED NOTES

1. REFRIGERANT PIPING UP THROUGH FLOOR, SEE M101.
2. EXISTING DELTA CONTROL PANELS TO REMAIN IN SERVICE. EXPAND CONTROLS TO SERVICE NEW SYSTEMS AND EQUIPMENT.
3. AC UNIT AND RELATED CONDENSING UNIT TO REMAIN IN SERVICE.

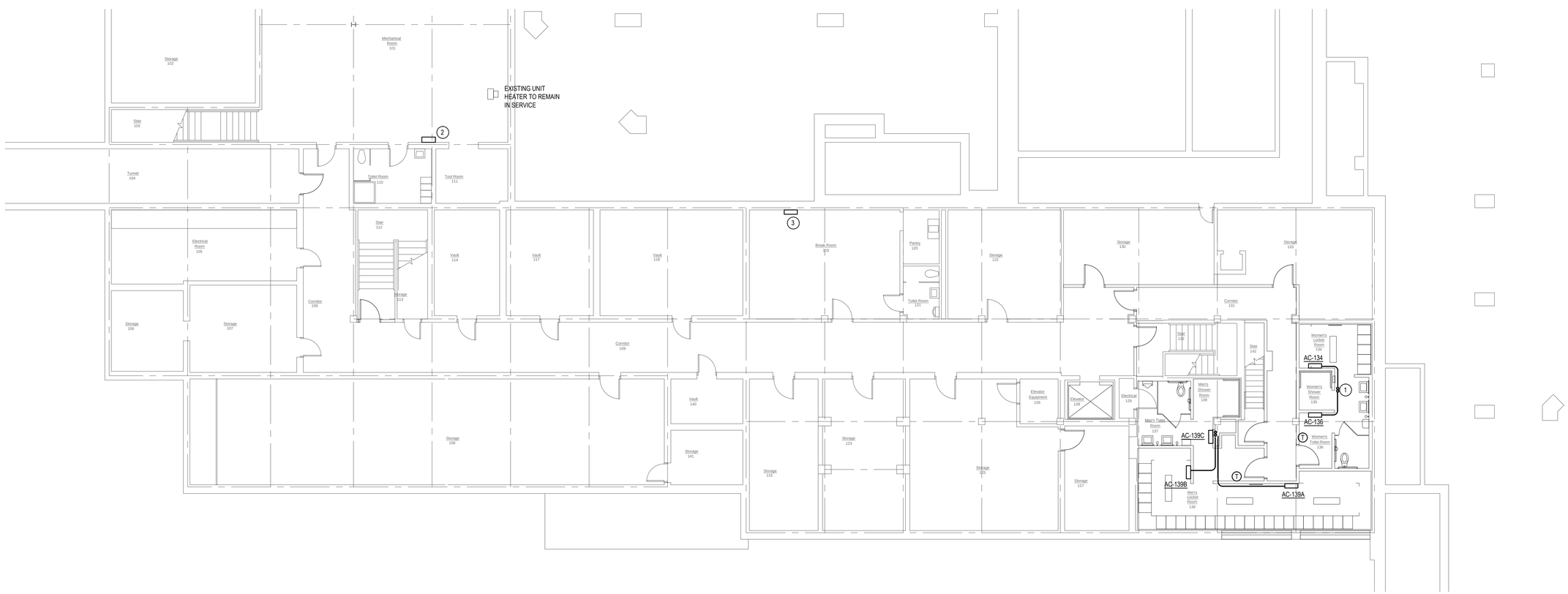

CALLED NORTH

HVAC PIPING BASEMENT FLOOR PLAN

1/8" = 1' - 0"

MORGAN M. LANDON, PE, LLC
2054 Brandon Drive NW
Grand Rapids, Michigan 49504
616-608-3372 fax 616-608-3372
morgan@mlandon.com

Consultant:

Chippewa County
City / County Building Renovation
325 Court Street
Sault Saint Marie, Michigan 49783

Project Title:

Landmark Design Group, P.C.
3900 Linden Ave. S.E. Suite C, Grand Rapids, MI 49548-3406
v: (616) 956-0606

date:	issued for:
04-09-2012	Bids and Permits

Seal:

Project Number:

Landmark Project Number:

10-007

© 2012 Landmark Design Group P.C.

M100

GENERAL NOTES

1. REFER TO SPECIFICATIONS FOR MATERIALS AND EQUIPMENT REQUIREMENTS.
2. COORDINATE WORK WITH ALL OTHER TRADES BEFORE INSTALLATION TO ELIMINATE CONFLICTS.
3. RUN-OUTS ARE ½" HS & HR UNLESS OTHERWISE NOTED.
4. CONVECTORS AND THERMOSTATS ALONG NORTH AND WEST WALLS ARE INTENDED TO REMAIN IN SERVICE. INTEGRATE CONTROL OF NEW COIL VALVES TO PROVIDE PROPER CONTROL OF RELATED SPACE TEMPERATURE.
5. REFER TO M100 FOR LOCATION OF REFRIGERANT RISERS FROM BELOW. WHETHER SHOWN SPECIFICALLY OR NOT, CONTINUE THESE RISERS UP, CONCEALED IN WALLS OR CHASES, TO THE ROOF MOUNTED CONDENSING UNITS SHOWN ON ME201.

◯ KEYED NOTES

1. REFRIGERANT LINES UP FROM BELOW FLOOR TO ABOVE CEILING.
2. REFRIGERANT LINES UP THROUGH FLOOR ABOVE.
3. CUT AND PATCH EXISTING WALL AS NECESSARY TO ALLOW INSTALLATION OF NEW REFRIGERANT PIPING RISERS IN EXISTING CHASE.
4. WHERE NEW WALL "LANDS" ON EXISTING CONVECTOR, REMOVE CONVECTOR COVER AND REPLACE FINNED TUBE WITH ½" PIPE, OR CONNECT TO NEW FINNED TUBE.
5. NOT USED.
6. MINI-SPLIT SYSTEM EXTERIOR UNIT, MOUNT AS HIGH AS POSSIBLE TO KEEP OUT OF TRAFFIC.
7. RUN NEW REFRIGERANT LINES AS HIGH AS POSSIBLE, COORDINATE EXACT LOCATION WITH OVERHEAD DOOR.
8. CABINET UNIT HEATER TO REMAIN IN SERVICE, REMOVE COVER AND COMPLETELY CLEAN INTERIOR, FINNED TUBE, ETC., REPLACE COVER.
9. CONVECTOR TO REMAIN IN SERVICE, REMOVE COVER AND COMPLETELY CLEAN INTERIOR, FINNED TUBE, ETC., REPLACE COVER.
10. RELOCATED ELECTRIC FINNED TUBE, WIRE TO OPERATE IN SEQUENCE WITH RELATED VAV BOX.

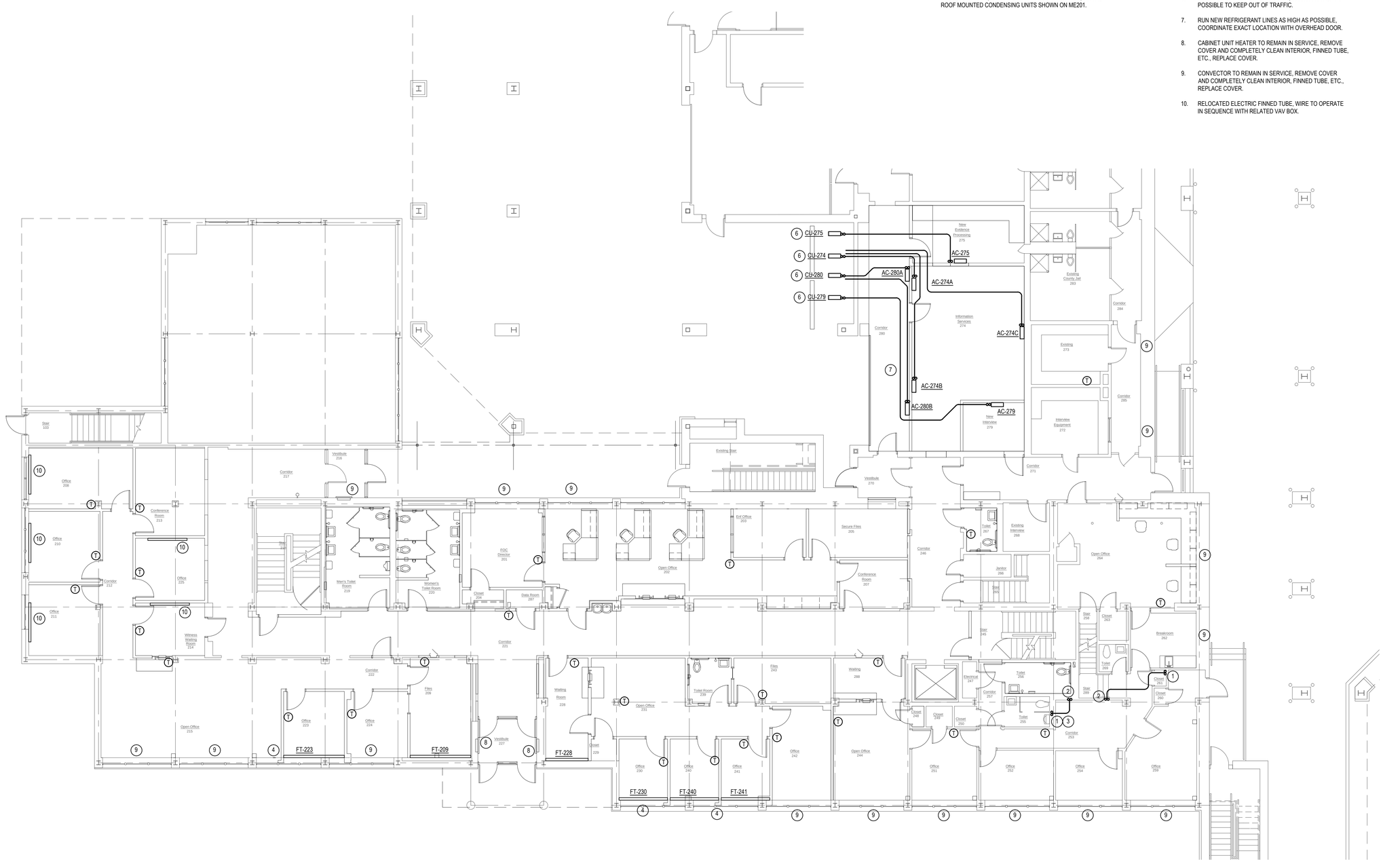

CALLED NORTH

HVAC PIPING FIRST FLOOR PLAN

1/8" = 1' - 0"

MORGAN M. LANDON, PE, LLC
2054 Brandon Drive NW
Grand Rapids, Michigan 49504
616-608-3372 fax 616-608-3372
morgan@mlandon.com

Consultant:

Chippewa County
City / County Building Renovation
325 Court Street
Sault Saint Marie, Michigan 49783

Project Title:

Landmark Design Group, P.C.
3900 Linden Ave. S.E. Suite C, Grand Rapids, MI 49548-3406
v: (616) 956-0606

date:	issued for:
04-09-2012	Bids and Permits

Seal:

Project Number:

Landmark Project Number: 10-007

© 2012 Landmark Design Group P.C.

M101

GENERAL NOTES

1. REFER TO SPECIFICATIONS FOR MATERIALS AND EQUIPMENT REQUIREMENTS.
2. COORDINATE WORK WITH ALL OTHER TRADES BEFORE INSTALLATION TO ELIMINATE CONFLICTS.
3. RUN-OUTS TO BE ½" UNLESS NOTED OTHER WISE.
4. CONVECTORS AND THERMOSTATS ALONG NORTH AND WEST WALLS ARE INTENDED TO REMAIN IN SERVICE. INTEGRATE CONTROL OF NEW COIL VALVES TO PROVIDE PROPER CONTROL OF RELATED SPACE TEMPERATURE.
5. REFER TO M101 FOR LOCATION OF AC UNITS AND REFRIGERANT RISERS FROM BELOW. WHETHER SHOWN SPECIFICALLY OR NOT, CONTINUE THESE RISERS UP, CONCEALED IN WALLS OR CHASES, TO THE ROOF MOUNTED CONDENSING UNITS SHOWN ON ME201.

◯ KEYED NOTES

1. REFRIGERANT LINES UP FROM BELOW TO ABOVE CEILING.
2. REFRIGERANT LINES UP THROUGH ROOF, SEE ME203.
3. WHERE NEW WALL "LANDS" ON EXISTING CONVECTOR, REMOVE CONVECTOR COVER AND REPLACE FINNED TUBE WITH ½" PIPE, OR CONNECT TO NEW FINNED TUBE.
4. CONVECTOR TO REMAIN IN SERVICE, REMOVE COVER AND COMPLETELY CLEAN INTERIOR, FINNED TUBE, ETC., REPLACE COVER.
5. PIPE ROUTE SHOWN FOR CONVENIENCE, KEEP PIPING OUT OF DATA CLOSET.
6. BARE FINNED TUBE UNDER RAISED PLATFORM, COORDINATE INSTALLATION WITH GENERAL TRADES, KEEP ALL PIPING CONCEALED.
7. REMOVE EXISTING CONVECTOR AND CONNECT NEW FINNED TUBE TO EXISTING PIPING, ALL NEW PIPING TO BE CONCEALED IN WALL CONSTRUCTION OR NEW FINNED TUBE COVER, BOTH PIECES OF FINNED TUBE TO BE CONTROLLED BY ONE VALVE.

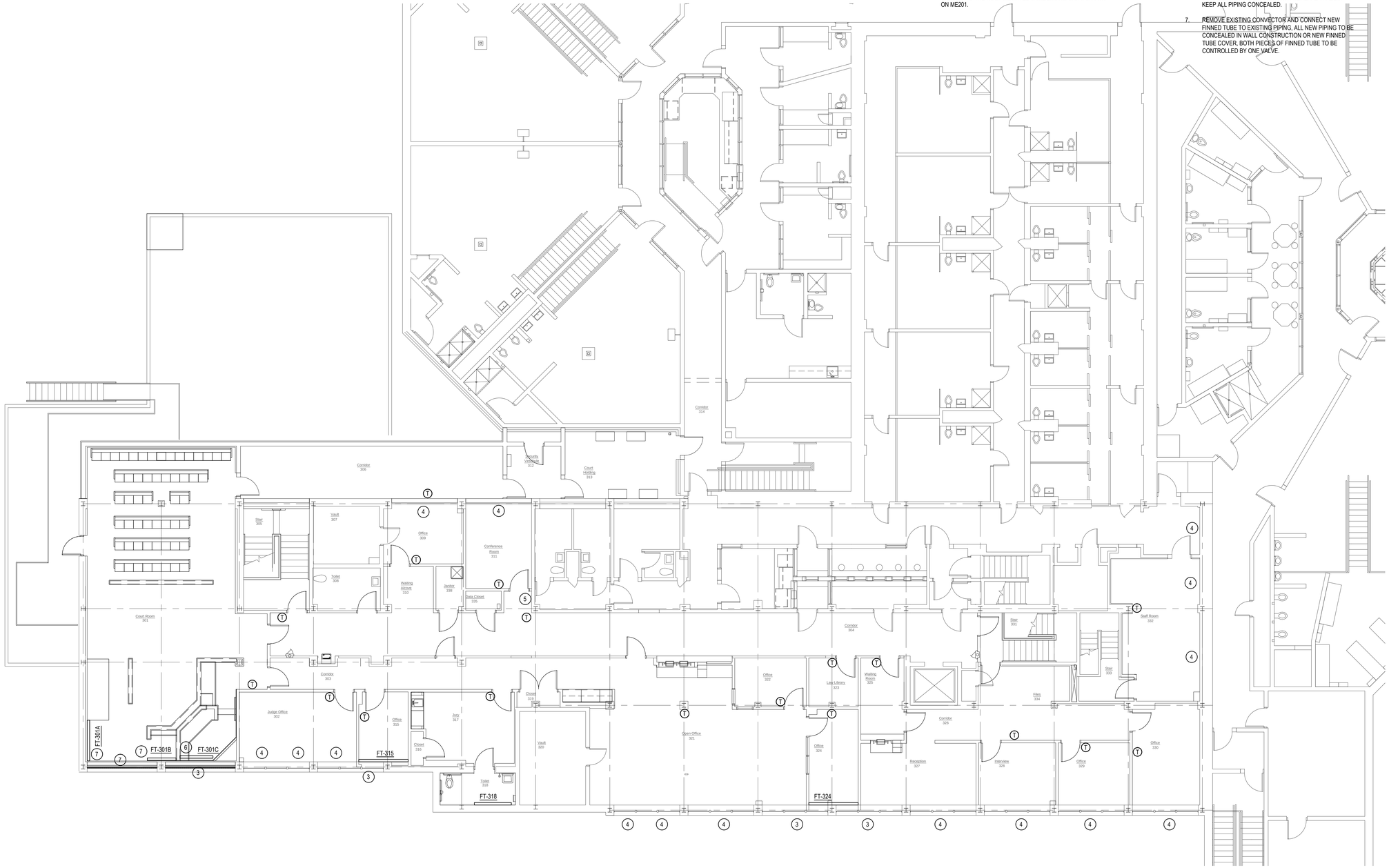

HVAC PIPING SECOND FLOOR PLAN

1/8" = 1' - 0"

CALLED NORTH

MORGAN M. LANDON, PE, LLC
2054 Brandon Drive NW
Grand Rapids, Michigan 49504
616-608-3372 fax 616-608-3372
morgan@mlandon.com

Consultant:

Chippewa County
City / County Building Renovation
325 Court Street
Sault Saint Marie, Michigan 49783

Project Title:

Landmark Design Group, P.C.
3900 Linden Ave. S.E. Suite C, Grand Rapids, MI 49548-3406
v: (616) 956-0606

date:	issued for:
04-09-2012	Bids and Permits

Seal:

Project Number:

Landmark Project Number: 10-007

© 2012 Landmark Design Group P.C.

M102

GENERAL NOTES

1. REFER TO SPECIFICATIONS FOR MATERIALS AND EQUIPMENT REQUIREMENTS.
2. COORDINATE WORK WITH ALL OTHER TRADES BEFORE INSTALLATION TO ELIMINATE CONFLICTS.

KEYED NOTES

1. 8x6 EXHAUST DUCT OPEN TO ELEVATOR EQUIPMENT ROOM.
2. 14x8 ALUMINUM EXHAUST RISER UP THROUGH FLOOR, SEE M201.
3. 10x5 OUTSIDE AIR DOWN THROUGH FLOOR ABOVE.
4. NOT USED.
5. NOT USED.
6. NOT USED.
7. 12x8 EXHAUST UP THROUGH FLOOR ABOVE, SEE M201.
8. 10X4 DUCT, RISER, AND EXHAUST GRILLES TO REMAIN.

CALLED NORTH

HVAC DUCTWORK BASEMENT FLOOR PLAN

1/8" = 1' - 0"

MORGAN M. LANDON, PE, LLC
2054 Brandon Drive NW
Grand Rapids, Michigan 49504
616-608-3372 fax 616-608-3372
morgan@mlandon.com

Consultant:

Chippewa County
City / County Building Renovation
325 Court Street
Sault Saint Marie, Michigan 49783

Project Title:

Landmark Design Group, P.C.
3900 Linden Ave. S.E. Suite C, Grand Rapids, MI 49548-3406
v: (616) 956-0606

date:	issued for:
04-09-2012	Bids and Permits

Seal:

Project Number:

Landmark Project Number:

10-007

© 2012 Landmark Design Group P.C.

M200

GENERAL NOTES

1. REFER TO SPECIFICATIONS FOR MATERIALS AND EQUIPMENT REQUIREMENTS.
2. COORDINATE WORK WITH ALL OTHER TRADES BEFORE INSTALLATION TO ELIMINATE CONFLICTS.

◯ KEYED NOTES

1. 12x6 EXHAUST DUCT TO REMAIN IN SERVICE.
2. CONNECT NEW 6x4 EXHAUST TO EXISTING AND EXTEND TO NEW RISER UP THROUGH FLOOR.
3. 8x6 EXHAUST DUCT UP FROM ELEVATOR EQUIPMENT ROOM, CONTINUE UP THROUGH SECOND FLOOR.
4. 14x8 ALUMINUM EXHAUST DUCT UP FROM BELOW, THEN UP THROUGH FLOOR ABOVE, SEE M202.
5. 14X6 OUTSIDE AIR DUCT DOWN THROUGH FLOOR, SEE M200.
6. 18x8 OUTSIDE AIR UP THROUGH FLOOR, SEE M200.
7. 6x4 EXHAUST DUCT AND GRILL TO REMAIN IN SERVICE.
8. 12x8 EXHAUST RISER UP, SEE M202.
9. 10x5 OUTSIDE AIR DOWN FROM ABOVE, OFFSET ABOVE CEILING AND CONTINUE DOWN THROUGH FLOOR TO BASEMENT, SEE M200.
10. ROUTE DUCT THROUGH SPACE BETWEEN END OF BEAM AND WALL, KEEP TIGHT TO BEAM ABOVE.
11. 10x6 OUTSIDE AIR DOWN THROUGH FLOOR ABOVE, THEN DOWN THROUGH FIRST FLOOR, KEEP AS TIGHT TO WALLS AS STRUCTURE WILL ALLOW.
12. 8x6 OUTSIDE AIR DOWN FROM ABOVE, THEN TO CORRIDOR SUPPLY AIR DIFFUSER.
13. CONNECT NEW 6x4 DUCT TO EXISTING AND RUN TO THE NEW RISER.
14. NEW 12x3 ½ UP IN WALL FROM BELOW, THEN CONNECT TO EXISTING 10x4 UP TO REMAIN. PROVIDE NEW FLOOR PENETRATION FOR NEW RISER, THEN CONNECT TO EXISTING DUCT IN BASEMENT AT ORIGINAL RISER LOCATION.
15. VENTILATION AIR DUCT AND REFRIGERATION LINES UP TO ROOF THROUGH CHASE ABOVE.
16. EXISTING AIR HANDLER AND DUCTWORK TO REMAIN IN SERVICE.
17. EXTEND RETURN DUCT FULL SIZE OF UNIT INLET.
18. 20x10 SUPPLY DOWN THROUGH SECOND FLOOR, SEE M202.
19. 22x12 RETURN UP THROUGH FLOOR, SEE M202.
20. CAP 8x8 RETURN TO REMAIN IN SERVICE.
21. CONNECT NEW RETURN AIR GRILLE TO EXISTING DUCT TO REMAIN IN SERVICE.
22. NOT USED.
23. NOT USED.
24. PROVIDE NEW 12x6 EXHAUST GRILLE AT TOILET ROOM(100 CFM) AND NEW 8x6 EXHAUST GRILLE (50 CFM) AT JANITOR CLOSET.
25. 16x10 SUPPLY DOWN THROUGH SECOND FLOOR SEE M202.
26. PROVIDE NEW 10x10 EXHAUST GRILLE AT EXISTING EXHAUST DUCT FROM THIS ROOM.
27. EXISTING AC UNIT TO REMAIN IN SERVICE.
28. RELOCATED AC UNIT TO REMAIN IN SERVICE, RELOCATE AND RECONNECT REFRIGERANT AND CONDENSATE PIPING TO MAINTAIN PROPER OPERATION OF UNIT.
29. RELOCATE AND RECONNECT VAV BOX. INTEGRATE CONTROLS WITH RELOCATED ELECTRIC FINNED TUBE.
30. RELOCATE AND RECONNECT BYPASS DAMPER, INTEGRATE WITH CONTROLS TO MAINTAIN PROPER AIR FLOW THROUGH THE ROOF TOP UNIT.

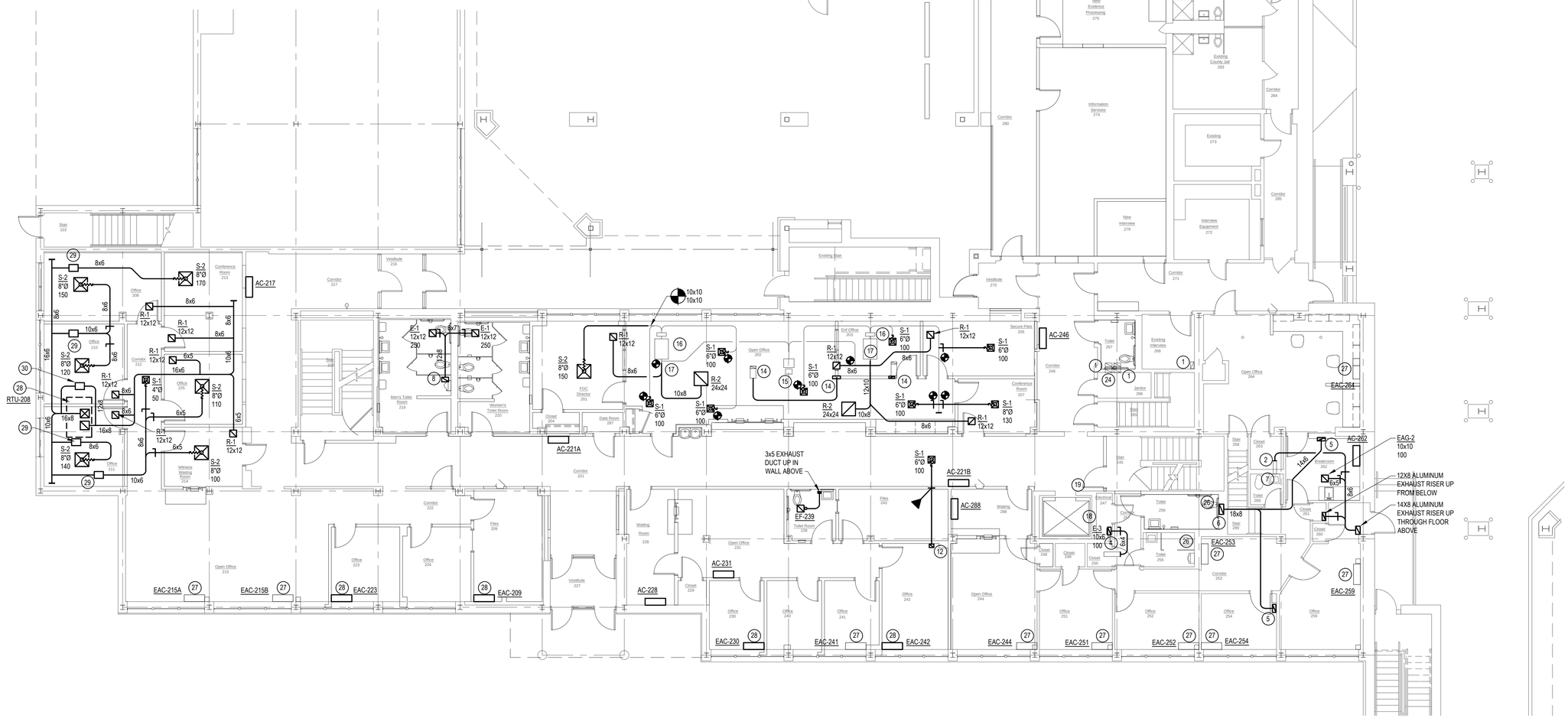

HVAC DUCTWORK FIRST FLOOR PLAN

1/8" = 1' - 0"

Consultant:

MORGAN M. LANDON, PE, LLC
2054 Brandon Drive NW
Grand Rapids, Michigan 49504
616-608-3372 fax 616-608-3372
morgan@mlandon.com

Project Title:

Chippewa County
City / County Building Renovation
325 Court Street
Sault Saint Marie, Michigan 49783

Landmark Design Group, P.C.
3900 Linden Ave. S.E. Suite C, Grand Rapids, MI 49548-3406
v: (616) 956-0606

date:	issued for:
04-09-2012	Bids and Permits

Seal:

Project Number:

Landmark Project Number: 10-007

© 2012 Landmark Design Group P.C.

M201

GENERAL NOTES

1. REFER TO SPECIFICATIONS FOR MATERIALS AND EQUIPMENT REQUIREMENTS.
2. COORDINATE WORK WITH ALL OTHER TRADES BEFORE INSTALLATION TO ELIMINATE CONFLICTS.

◯ KEYED NOTES

1. NOT USED.
2. 8x6 EXHAUST RISER UP FROM ELEVATOR EQUIPMENT ROOM TO ROOF EXHAUST FAN.
3. 14x8 ALUMINUM EXHAUST DUCT UP FROM BELOW, THEN TO ROOF EXHAUST FAN.
4. 18x8 OUTSIDE AIR DOWN FROM ERU-401, THEN DOWN THROUGH FLOOR, SEE M201.
5. 12x8 EXHAUST RISER UP THROUGH FLOOR AND ROOF TO EXHAUST FAN ON ROOF, SEE ME203.
6. 6"Ø EXHAUST UP THROUGH ROOF TO EXHAUST DISCHARGE CAP ON ROOF CURB.
7. 10x5 OUTSIDE AIR DOWN (AVOID WALL BELOW) AND CONTINUE DOWN THROUGH FLOOR.
8. 24x10 SUPPLY AND RETURN UP THROUGH ROOF TO RTU-303, SEE ME203.
9. DUCT SIZE SHOWN IS CLEAR INSIDE, PROVIDE 1 INCH THICK SOUND ATTENUATING LINING.
10. 10x6 OUTSIDE AIR DUCT DOWN THROUGH SECOND FLOOR, SEE M201.
11. 8x6 OUTSIDE AIR DUCT DOWN FROM ABOVE ROOF, AND DOWN THROUGH FLOOR, SEE M201.
12. 12x6 EXHAUST RISER UP TO ROOF EXHAUST FAN TO REMAIN IN SERVICE.
13. 20x18 SUPPLY DOWN FROM ABOVE, SPLIT TO 20x10 AND 20x8 TO SERVE FIRST FLOOR, SEE M201.
14. 20x10 RETURN UP FROM BELOW, CONTINUE THROUGH ROOF, SEE ME203.K
15. MOUNT THIS HEATING COIL IN COMMON DUCT RISER, NOT AS SHOWN HERE DIAGRAMATICALLY.
16. COORDINATE EXACT LOCATION OF FLOOR GRILLES WITH GENERAL TRADES FRAMING.
17. MAINTAIN EXISTING EXHAUST FROM EXISTING TOILET.
18. 12x8 UP THROUGH CEILING AND ROOF CURB, SEE ME203.
19. EXISTING AC UNIT TO REMAIN IN SERVICE.
20. RELOCATED AC UNIT TO REMAIN IN SERVICE, RELOCATE AND RECONNECT REFRIGERANT AND CONDENSATE PIPING TO MAINTAIN PROPER OPERATION OF UNIT.

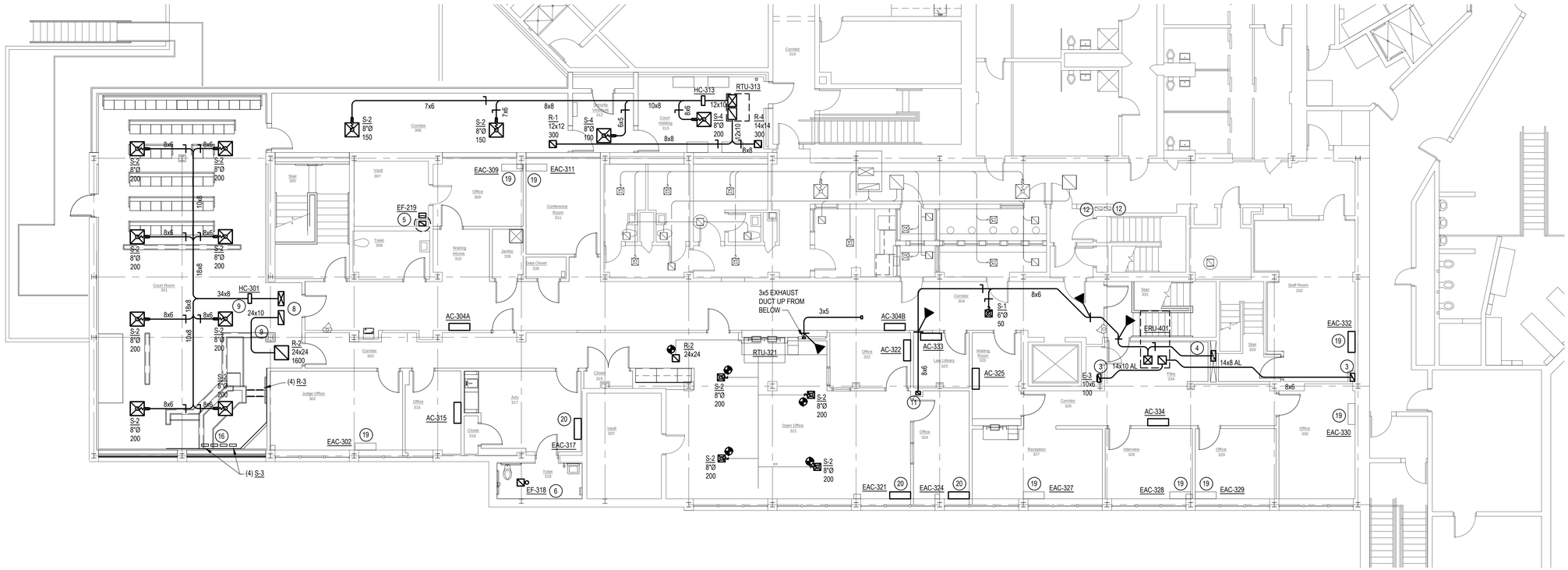

CALLED NORTH

HVAC DUCTWORK SECOND FLOOR PLAN

1/8" = 1' - 0"

MORGAN M. LANDON, PE, LLC
2054 Brandon Drive NW
Grand Rapids, Michigan 49504
616-608-3372 fax 616-608-3372
morgan@mlandon.com

Consultant:

Chippewa County
City / County Building Renovation
325 Court Street
Sault Saint Marie, Michigan 49783

Project Title:

Landmark Design Group, P.C.
3900 Linden Ave. S.E. Suite C, Grand Rapids, MI 49548-3406
v: (616) 956-0606

issued for:	
Bids and Permits	
date:	
04-09-2012	

Seal:

Project Number:

Landmark Project Number:

10-007

© 2012 Landmark Design Group P.C.

M202

AIR INLETS AND OUTLETS

S = SUPPLY R = RETURN E = EXHAUST

TAG NO.	MODEL	DESCRIPTION	REMARKS
S-1	1300A, 12x12	STEEL, LOUVER FACE, BAKED ENAMEL, OFF-WHITE, SURFACE	1,2
S-2	1300A, 24x24	STEEL, LOUVER FACE, BAKED ENAMEL, OFF-WHITE, LAY-IN	1,2
S-3	200-4-12-SA	ALUMINUM FLOOR GRILLE	1
S-4	SG-500, 24x24	STEEL, 4-WAY, WITH SECURITY FACE PLATE	1,6
S-5	T64	STEEL, DOUBLE DEFLECTION	1,2
R-1	CR510C	ALUMINUM, GRID CORE, CLEAR ANODIZED, SURFACE	1,2,3
R-2	CR510U	ALUMINUM, GRID CORE, CLEAR ANODIZED, LAY-IN	1,2,3
R-3	200-2 1/4-12-SA	ALUMINUM TOE SPACE GRILLE	1
R-4	T70, SG-800L	STEEL RETURN WITH SECURITY FACE PLATE	1,6
R-5	T70D	STEEL, FIXED 35 DEG	1,4
E-1	CR510C	ALUMINUM, GRID CORE, CLEAR ANODIZED, SURFACE	1,2,3
E-2	CR510U	ALUMINUM, GRID CORE, CLEAR ANODIZED, LAY-IN	1,2,3

NOTES:
1. BASED ON TUTTLE & BAILEY.
2. CONCEALED MOUNTING.
3. 1/2"x1/2"x1" ALUMINUM GRID CORE.
4. MOUNT INVERTED.
5. BASED ON ANEMOSTAT.
6. TAMPER RESISTANT FASTENERS

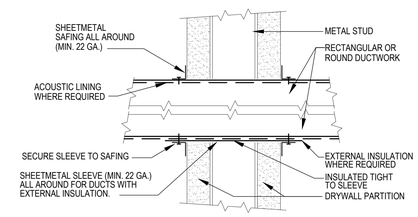

3 M250 **DUCT PENETRATION THROUGH NON-FIRE RATED WALL**
NO SCALE

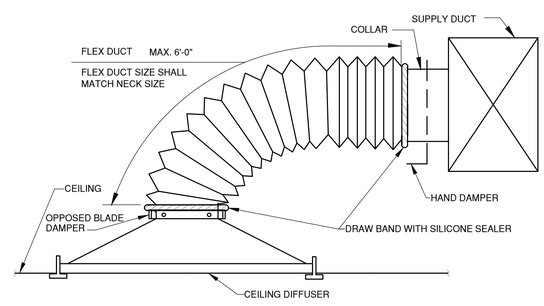

5 M250 **TYPICAL DIFFUSER CONNECTION**
NO SCALE

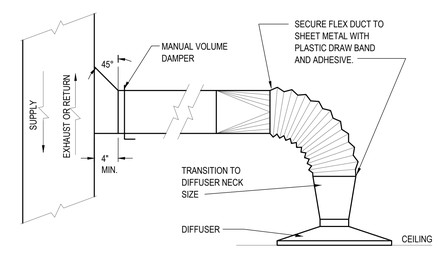

2 M250 **TYPICAL DUCT TAKE-OFF AND DIFFUSER CONNECTION**
NO SCALE

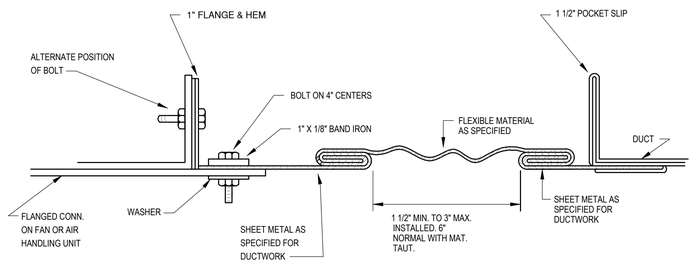

4 M250 **RECTANGULAR FLEXIBLE CONNECTION**
NO SCALE

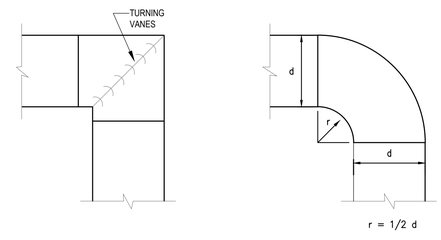

NOTE: RADIUS TURNS WITH AN INSIDE RADIUS OF LESS THAN 1/2 d ARE NOT ACCEPTABLE.

1 M250 **ACCEPTABLE DUCT TURNS**
NO SCALE

Consultant:
MORGAN M. LANDON, PE, LLC
2054 Brandon Drive NW
Grand Rapids, Michigan 49504
616-608-3372 fax 616-608-3372
morgan@mlandon.com

Project Title:
Chippewa County
City / County Building Renovation
325 Court Street
Sault Saint Marie, Michigan 49783

Landmark Design Group, P.C.
3900 Linden Ave. S.E. Suite C, Grand Rapids, MI 49548-3406
v: (616) 956-0606

date:	issued for:
04-09-2012	Bids and Permits

Seal:

Project Number:

Landmark Project Number:
10-007

© 2012 Landmark Design Group P.C.

M250

GENERAL DEMOLITION NOTES

1. THESE NOTES APPLY TO ALL ME100 SERIES DRAWINGS.
2. REFER TO GENERAL TRADES DEMOLITION DRAWINGS, REMOVE OR RELOCATE ALL M & E FEATURES AS NECESSARY (WHETHER SPECIFICALLY SHOWN OR NOT).
3. INFORMATION SHOWN HERE REFLECTS EXISTING RECORDS & RECENT ON-SITE OBSERVATIONS. THE DEMOLITION WORK SHOWN IS INTENDED TO CONVEY THE GENERAL NATURE & SCOPE OF THE WORK REQUIRED. THE CONTRACTOR SHALL PERFORM ALL DEMOLITION WORK NECESSARY TO PROPERLY COMPLETE THE NEW WORK SHOWN ELSEWHERE.
4. THE DEMOLITION DRAWINGS ARE INTENDED TO SHOW THE GENERAL EXTENT OF THE MECHANICAL AND ELECTRICAL WORK REQUIRED FOR THIS PROJECT. IT IS INTENDED THAT ALL MECHANICAL AND ELECTRICAL DEMOLITION THAT IS REQUIRED TO PROVIDE THE COMPLETION OF THE NEW SYSTEMS BE PERFORMED AS A PART OF THE BASE BID FOR THE PROJECT.
5. PROVIDE TEMPORARY MECHANICAL & ELECTRICAL AS NECESSARY TO MAINTAIN PROPER OPERATION OF ALL SYSTEMS.
6. REMOVE ALL EXISTING PIPING, DUCTWORK, WIRING, ETC., THAT IS NOT REQUIRED TO SUPPORT THE PROPER OPERATION OF THE NEW SYSTEMS & EXISTING SYSTEMS TO REMAIN.
7. FIRE PROTECTION, PLUMBING, MECHANICAL, AND ELECTRICAL DEMOLITION MAY BE NOTED ON THESE AND OTHER PLANS.
8. WHERE DUCTS AND PIPING ARE SHOWN TO BE REMOVED, SEAL OPENINGS IN MAINS THAT ARE LEFT TO REMAIN.
9. REFER TO GENERAL TRADES DEMOLITION DRAWINGS, REMOVE OR RELOCATE ALL M & E FEATURES AS NECESSARY (WHETHER SPECIFICALLY SHOWN OR NOT).
10. PATCH AND REPAIR ALL EXISTING SURFACES TO REMAIN THAT MAY BE DAMAGED BY THE PERFORMANCE OF THE DEMOLITION WORK.
11. PROTECT EQUIPMENT PIPING, DUCTWORK, CONDUIT, WIRING, ETC., TO REMAIN IN SERVICE AGAINST ANY DAMAGE.
12. PROTECT PIPING, DUCTWORK, CONDUIT, ETC., FROM ENTRANCE OF FOREIGN MATERIALS.

◯ KEYED NOTES

1. REMOVE PLUMBING FIXTURE.
2. PREPARE PIPING TO REMAIN FOR CONNECTION TO NEW PLUMBING FIXTURE.
3. CAP PIPING TO BE ABANDONED BEHIND FINISHED SURFACES TO REMAIN.
4. EXISTING CONDENSATE PIPING AND RISERS TO REMAIN IN SERVICE, ADJUST RISER LOCATIONS AS MAY BE REQUIRED.
5. 10X4 DUCT, RISER, AND EXHAUST GRILLES TO REMAIN.
6. REMOVE 12x6 EXH DUCT AND GRILLE, LEAVE RISER FOR CONVERSION TO OUTSIDE AIR SUPPLY.
7. REMOVE EXHAUST GRILLE, AND DUCT RISER.
8. REMOVE CATCH BASIN AND COVER, FILL, PATCH FLOOR TO MATCH ADJACENT MATERIALS.
9. REFER TO ARCHITECTURAL PLANS FOR CEILING DEMOLITION SCOPE. REMOVE LIGHTS, WIRING, AND CONDUIT IN THESE AREAS.

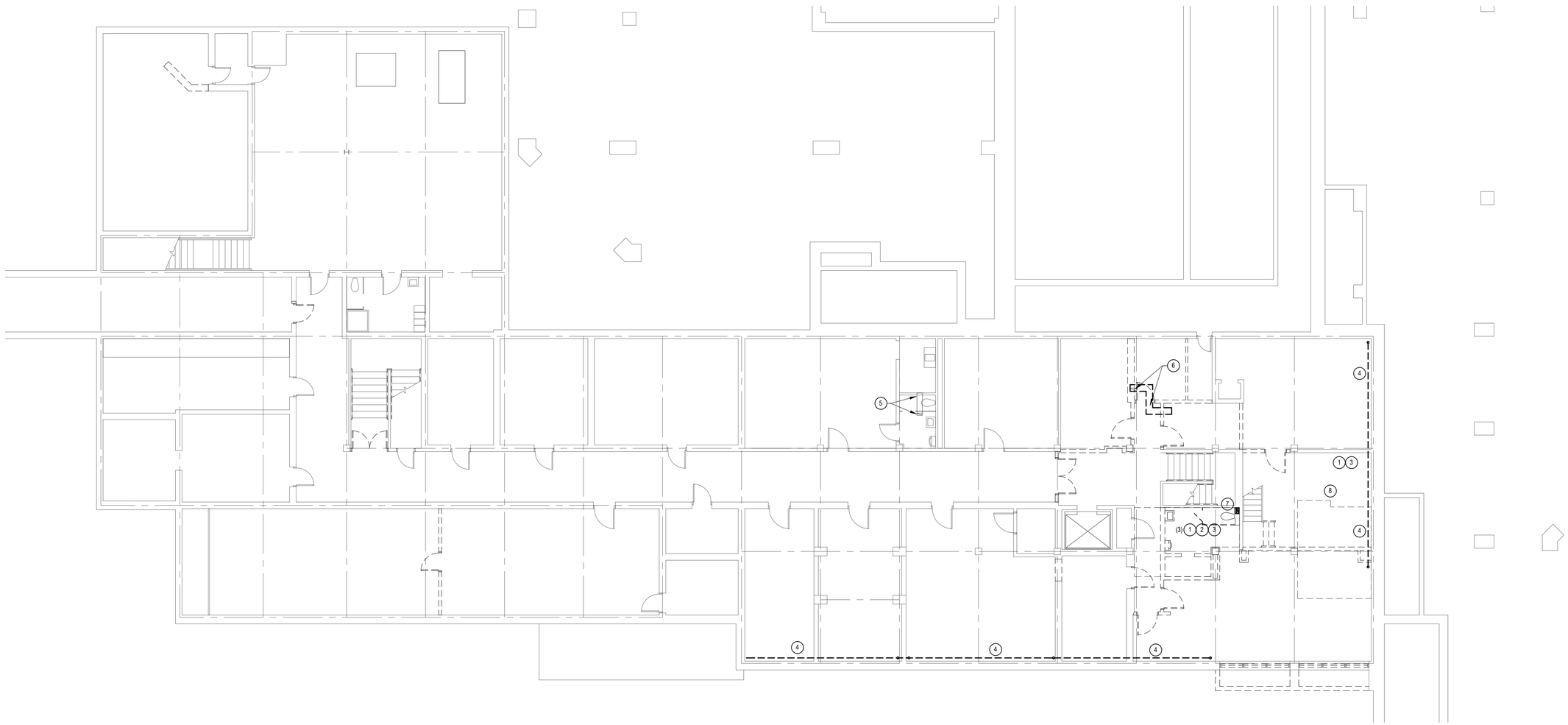

CALLED NORTH

M&E DEMOLITION
BASEMENT FLOOR PLAN
1/8" = 1' - 0"

MORGAN M. LANDON, PE, LLC
2054 Brandon Drive NW
Grand Rapids, Michigan 49504
616-608-3372 fax 616-608-3372
morgan@mlandon.com

Consultant:

Chippewa County
City / County Building Renovation
325 Court Street
Sault Saint Marie, Michigan 49783

Project Title:

Landmark Design Group, P.C.
3900 Linden Ave. S.E. Suite C, Grand Rapids, MI 49548-3406
v: (616) 956-0606

date:	issued for:
04-09-2012	Bids and Permits

Seal:

Project Number:

Landmark Project Number:
10-007

© 2012 Landmark Design Group P.C.

ME100

KEYED NOTES

1. 12x6 EXHAUST DUCT TO REMAIN IN SERVICE.
2. ROOF TOP UNIT TO REMAIN IN SERVICE AT NEW LOCATION. SEE REVISED DUCT LAYOUT. CLEAN UNIT INSIDE AND OUT INCLUDING COIL AND HEAT EXCHANGER, PROVIDE NEW FILTERS. REPORT ANY MAINTENANCE DEFICIENCIES.
3. RELOCATE MINI-SPLIT TO LOCATION SHOWN ON M101. RELOCATE AND RECONNECT PIPING. PATCH WALL AND FLOOR OPENINGS TO MATCH ADJACENT SURFACES.
4. 10X4 DUCT AND DUCT AND RISER UP TO REMAIN IN SERVICE, REMOVE RISER DOWN.
5. 12x6 EXHAUST DUCTS AND GRILLES TO REMAIN IN SERVICE.
6. REMOVE PLUMBING FIXTURE AND TURN OVER TO OWNER..
7. PREPARE PIPING TO REMAIN FOR CONNECTION TO NEW PLUMBING FIXTURE.
8. CAP PIPING TO BE ABANDONED BEHIND FINISHED SURFACES TO REMAIN.
9. REMOVE 6x4 EXHAUST RISER AND PREP FOR CONNECTION TO NEW DUCT AND RISER.
10. REMOVE EXHAUST GRILLE AND DUCT RISER.
11. REMOVE 12x4 EXHAUST RISER, GRILLE, AND PORTION OF EXISTING HORIZONTAL DUCT RUN, AND PREP FOR CONNECTION TO NEW DUCT AND RISER.
12. REMOVE 24x24 GRILLE AND PROVIDE SHEET METAL CLOSURE ON BACK (FLAT BLACK WEATHER PROOF PAINT), FILL OPENING WITH INSULATION AND REPLACE GRILLE.
13. REMOVE DUCT AND DIFFUSERS AS SHOWN, PREP DUCT TO REMAIN FOR NEW CONNECTION.
14. DISCONNECT EXISTING HEATING ELEMENT.
15. RECESSED HEATING UNIT TO REMAIN IN SERVICE.
16. WALL MOUNTED MINI-SPLIT TO REMAIN IN SERVICE AT THIS LOCATION.
17. REMOVE LIGHT FIXTURE AND PREP FOR CONNECTION TO NEW LIGHTING SHOWN ON E201.
18. REMOVE FIRE HOSE CABINET AND RELATED PIPING BACK TO MAIN.
19. REMOVE NEWER ELECTRONIC THERMOSTAT AND REUSE IN NEW CONTROL SYSTEM OR TURN OVER TO OWNER.
20. REMOVE DUCTS, DIFFUSERS, GRILLES, THERMOSTATS, VAV BOXES, ETC., AND PREP FOR INSTALLATION OF NEW WORK. VAV BOXES ARE TO BE RE-USED IN NEW LOCATIONS, SEE NEW DUCT LAYOUT FOR LOCATIONS.
21. REMOVE FLOOR DRAIN, CAP PIPING ACCORDING TO CODE REQUIREMENTS, PATCH FLOOR TO MATCH ADJACENT EXISTING SURFACES.
22. REMOVE UNIT HEATER, CAP PIPING TO REMAIN AS CLOSE AS POSSIBLE TO EXISTING SURFACES TO REMAIN.
23. REMOVE 10x4 RISER UP FROM BELOW, PATCH FLOOR TO MATCH EXISTING.
24. REMOVE ALL PIPING THAT HAS BEEN ABANDONED IN PLACE IN THIS AREA.
25. REMOVE CATCH BASIN COVER, SEAL PIPING LEAVING CATCH BASIN AS REQUIRED BY CODE, FILL CATCH BASIN WITH APPROVED FILL MATERIAL TO MATCH EXISTING FLOOR LEVEL, PREP FOR INSTALLATION OF NEW FLOORING MATERIALS BY OTHERS.
26. REMOVE ELECTRIC FINNED TUBE AND RE-USE IN NEW OFFICE LAYOUT, SEE M101.

GENERAL NOTES

1. REFER TO SPECIFICATIONS FOR MATERIALS AND EQUIPMENT REQUIREMENTS.
2. COORDINATE WORK WITH ALL OTHER TRADES BEFORE INSTALLATION TO ELIMINATE CONFLICTS.
3. REFER TO ARCHITECTURAL PLANS FOR CEILING DEMOLITION SCOPE. REMOVE LIGHTS, WIRING, AND CONDUIT IN THESE AREAS.

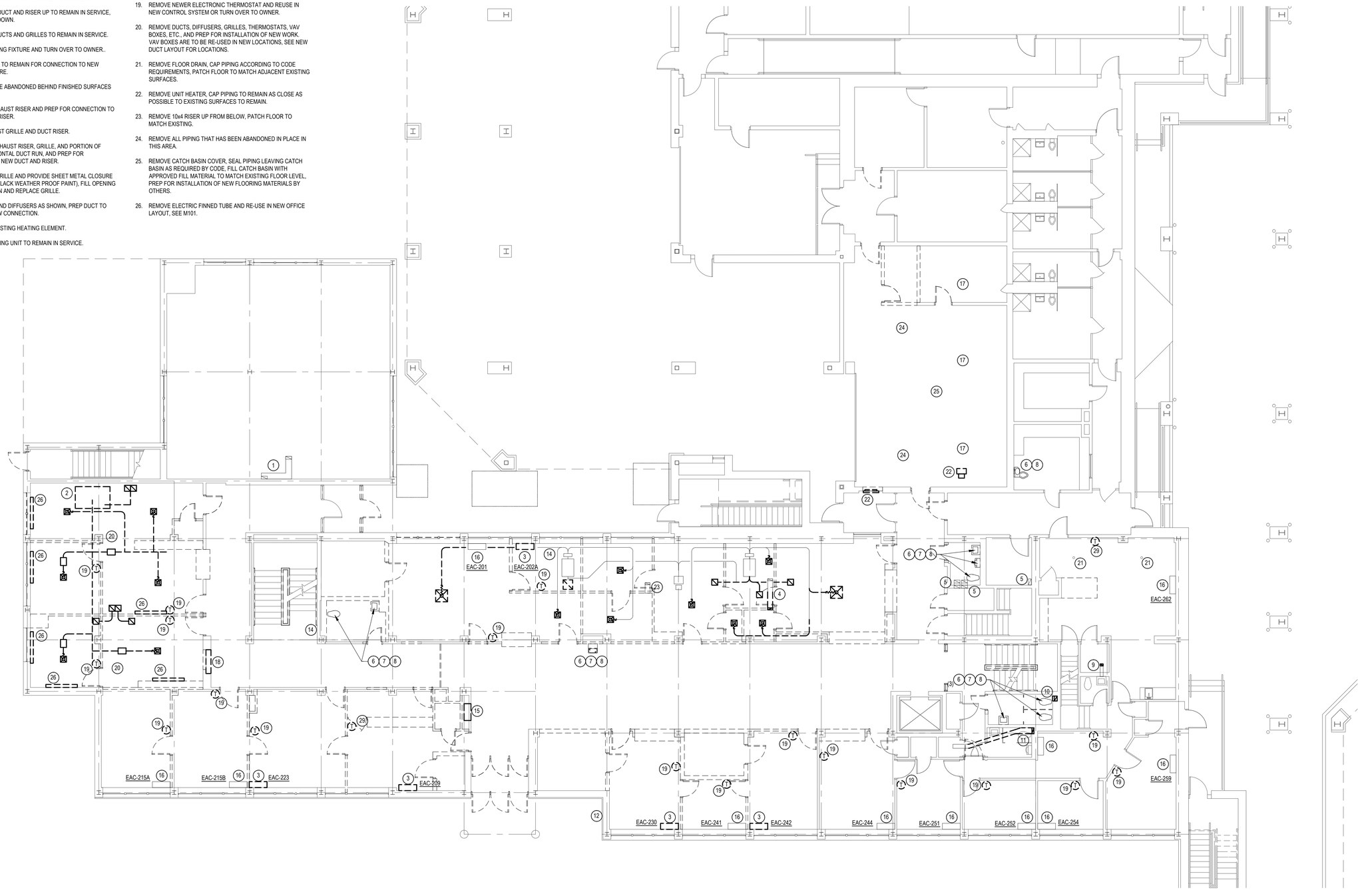

CALLED NORTH

M&E DEMOLITION FIRST FLOOR PLAN

1/8" = 1' - 0"

Consultant:

MORGAN M. LANDON, PE, LLC
2054 Brandon Drive NW
Grand Rapids, Michigan 49504
616-608-3372 fax 616-608-3372
morgan@mlandon.com

Project Title:

Chippewa County
City / County Building Renovation
325 Court Street
Sault Saint Marie, Michigan 49783

Landmark Design Group, P.C.
3900 Linden Ave. S.E. Suite C, Grand Rapids, MI 49548-3406
v: (616) 956-0606

date:	issued for:
04-09-2012	Bids and Permits

Seal:

Project Number:

Landmark Project Number:

10-007

© 2012 Landmark Design Group P.C.

ME101

GENERAL NOTES

1. REFER TO SPECIFICATIONS FOR MATERIALS AND EQUIPMENT REQUIREMENTS.
2. COORDINATE WORK WITH ALL OTHER TRADES BEFORE INSTALLATION TO ELIMINATE CONFLICTS.
3. REFER TO ARCHITECTURAL PLANS FOR CEILING DEMOLITION SCOPE. REMOVE LIGHTS, WIRING, AND CONDUIT IN THESE AREAS.

KEYED NOTES

1. REMOVE 6x4 EXHAUST RISER, PATCH FLOOR OPENING TO MATCH EXISTING MATERIALS.
2. REMOVE EXHAUST DUCT RISER, GRILLE, ETC.
3. REMOVE EXHAUST GRILLE, SEAL OPENING IN DUCT RISER AIR TIGHT.
4. REMOVE 12x6 EXHAUST RISER, PATCH FLOOR OPENING TO MATCH EXISTING MATERIALS.
5. 12x6 EXHAUST RISER UP TO ROOF EXHAUST FAN TO REMAIN IN SERVICE.
6. 8x6 EXHAUST RISER UP TO ROOF EXHAUST FAN TO REMAIN IN SERVICE.
7. 10x4 EXHAUST RISER UP TO ROOF EXHAUST FAN TO REMAIN IN SERVICE.
8. EXHAUST DUCT AND 8x6 RISER UP TO ROOF EXHAUST FAN TO REMAIN IN SERVICE.
9. REMOVE 20x12 AND 16x16 VENTILATION RISERS, PATCH FLOOR PENETRATION TO MATCH EXISTING MATERIALS.
10. REMOVE PLUMBING FIXTURE.
11. PREPARE PIPING TO REMAIN FOR CONNECTION TO NEW PLUMBING FIXTURE.
12. CAP PIPING TO BE ABANDONED BEHIND FINISHED SURFACES TO REMAIN..
13. PLUMBING FIXTURE TO REMAIN IN SERVICE.
14. RELOCATE MINI-SPLIT TO LOCATION SHOWN ON M202. RELOCATE AND RECONNECT PIPING. PATCH WALL AND FLOOR OPENINGS TO MATCH ADJACENT SURFACES.
15. REMOVE DUCTS, DIFFUSERS AND GRILLES FROM THIS AREA. PATCH ROOF DECK AT ROOF TOP UNIT TO MATCH EXISTING MATERIALS.
16. WALL MOUNTED MINI-SPLIT TO REMAIN IN SERVICE AT THIS LOCATION.
17. REMOVE DUCTS, DIFFUSERS, GRILLES, THERMOSTATS, VAV BOXES, ETC., AS SHOWN AND PREP FOR INSTALLATION OF NEW WORK.
18. REMOVE FIRE HOSE CABINET AND RELATED PIPING, CAP ABANDONED PIPING BEYOND FINISHED SURFACES TO REMAIN.
19. REMOVE NEWER ELECTRONIC THERMOSTAT. REUSE IN NEW SYSTEM, OR TURN OVER TO OWNER.

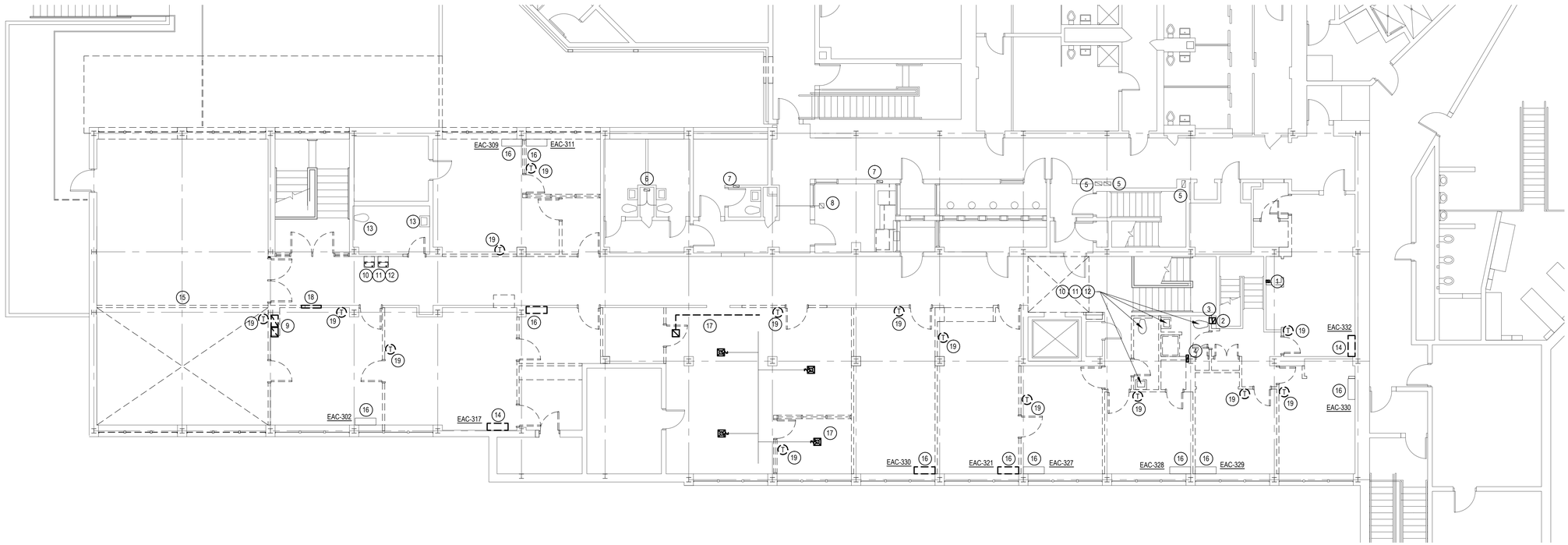

CALLED NORTH

M&E DEMOLITION SECOND FLOOR PLAN

1/8" = 1' - 0"

MORGAN M. LANDON, PE, LLC
2054 Brandon Drive NW
Grand Rapids, Michigan 49504
616-608-3372 fax 616-608-3372
morgan@mlandon.com

Consultant:

Chippewa County
City / County Building Renovation
325 Court Street
Sault Saint Marie, Michigan 49783

Project Title:

Landmark Design Group, P.C.
3900 Linden Ave. S.E. Suite C, Grand Rapids, MI 49548-3406
v: (616) 956-0606

date:	issued for:
04-09-2012	Bids and Permits

Seal:

Project Number:

Landmark Project Number: 10-007

© 2012 Landmark Design Group P.C.

ME102

MISC. EQUIPMENT SCHEDULE

WH-1	12 GALLON ELECTRIC, 1500 WATT, 120 / 1Ø, BRACKET MOUNT ON WALL AS HIGH AS POSSIBLE.
AC-245	NOMINAL 1 TON COOLING HEAT PUMP MINI-SPLIT SYSTEM, NEW, OR REUSE TWO (2) EXISTING NOMINAL ½ TON UNITS THAT ARE SHOWN ON THE DEMOLITION PLAN TO BE TURNED OVER TO THE OWNER.
ERU-401	GREENHECK MODEL ERCH-20M, 1,450 CFM SUPPLY, 1,375 CFM EXH, 1 ½ HP EACH FAN, SINGLE POINT ELEC CONNECTION, 208V / 3Ø, ELECTRIC HEATING COIL TO RAISE SUPPLY AIR TEMP TO 75 DEG F, COOLING COIL, D/X TO MAINTAIN 65 DEG SUPPLY AIR TEMP IN SUMMER, AIR COOLED CONDENSING UNIT TO MATCH ERU REQUIREMENTS, INTERNALLY MOUNTED MOTORIZED DAMPER AND INTAKE HOOD AT OUTSIDE AIR INTAKE, MOUNT MOTORS ON VIBRATION ISOLATORS WITHIN UNIT. PROVIDE MODULATING WHEEL FROST CONTROL, ROTATION SENSOR, MIROPROCESSOR DISCHARGE TEMPERATURE CONTROL, ECONOMIZER CONTROL, REMOTE PANEL (LOCATION TO BE DETERMINED), GFCI RECEPTACLE (REQUIRES SEPARATE 120V CIRCUIT), ROOF CURB, PAINTED EXTERIOR (COLOR TO BE SELECTED), AND FACTORY MOUNTED SENSORS.
EF-318	BROAN MODEL #684, 80 CFM, 120V/1Ø, CEILING MOUNTED, 4"Ø UP THROUGH ROOF CURB TO MATCHING ROOF DISCHARGE CAP; SWITCH FAN WITH LIGHTS IN THE ROOM.
HC-301	15 KW DUCT MOUNTED ELECTRIC HEATER, 208V / 3Ø. SCR MODULATING CONTROL INTEGRATED WITH ROOF TOP UNIT CONTROLS TO MAINTAIN THERMOSTAT SET POINT.
HC-313	6 KW DUCT MOUNTED ELECTRIC HEATER, 208V / 3Ø. SCR MODULATING CONTROL INTEGRATED WITH ROOF TOP UNIT CONTROLS TO MAINTAIN THERMOSTAT SET POINT.
SEE MASTER LIST OF UNITS	UNITS MARKED AS "EAC" ARE EXISTING MINI SPLIT AIR CONDITIONING UNITS TO BE REUSED IN PLACE, OR RELOCATED AS NOTED ON THE PLANS. FOR RELOCATED UNITS MOVE AND RECONNECT REFRIGERANT AND CONDENSATE PIPING AS WELL AS ELECTRICAL POWER AND CONTROL WIRING. UNITS MARKED AS "ECU" ARE EXISTING CONDENSING UNITS TO MATCH THE MINI SPLIT AIR CONDITIONING UNITS. THE EXISTING CONDENSING UNITS ARE TO BE REUSED IN PLACE. UNITS MARKED AS "AC" ARE NEW NOMINAL ¾ TON COOLING CAPACITY HEAT PUMP MINI SPLIT, WALL MOUNTED AIR CONDTIONING UNITS. COORDINATE FINAL LOCATION BEFORE ROUGH-IN. PROVIDE REFRIGERANT PIPING, CONCEALED IN NEW WALL CONSTRUCTION, AS REQUIRED BY UNIT MANUFACTURER. RUN NEW CONDENSATE PIPING DOWN IN WALL CONSTRUCTION TO CEILING SPACE OF FLOOR BELOW, AND THEN TO SAFE WASTE, OR JANITOR'S CLOSET. RUN POWER FROM NEW ELECTRICAL PANELS. UNITS MARKED AS "CU" ARE NEW HEAT PUMP TYPE CONDENSING UNITS TO MATCH THE NEW MINI SPLIT WALL MOUNTED AIR CONDITIONERS NOTED ABOVE. MOUNT ON ROOF ON 4x4 TREATED LUMBER, SIMILAR TO EXISTING UNITS. MAKE ROOF PENETRATIONS FOR PIPING AND POWER THROUGH PATE PIPE CURBS, OR EQUAL. EACH UNIT SUPPORTS ONE, OR MORE AIR CONDITIONERS, CAPACITY AS REQUIRED TO SUPPORT THE PROPER OPERATION OF ALL CONNECTED AIR CONDITIONERS.

AIR CONDITIONING UNIT MASTER LIST

AC-134A
AC-136
AC-137
AC-139A
AC-139B
EAC-209
EAC-215A
EAC-215B
AC-217
AC-221A
AC-221B
EAC-223
AC-228
EAC-230
AC-231
EAC-241
EAC-242
EAC-244
AC-246
EAC-251
EAC-252
EAC-253
EAC-254
EAC-259
EAC-262
EAC-256
AC-274A
AC-274B
AC-274C
ACZ75
AC-279
AC-280A
AC-280B

EAC-302
AC-303
AC-304A
AC-304B
EAC-309
EAC-311
AC-315
EAC-317
EAC-321
AC-322
AC-323
AC-325
EAC-327
EAC-328
EAC-329
EAC-330
EAC-332

CU-134 SERVES AC-134, 136
CU-137 SERVES AC-137, 139A, 139B

ECU-202 SERVES EAHU 202
ECU-203 SERVES EAH-203
ECU-209 SERVES EAC-209
ECU-215 SERVES EAC-215A
CU-217 SERVES AC-217
CU-221A SERVES AC-221A
CU-221B SERVES AC-221B, 288
CU-228 SERVES AC-228, 231
ECU-230 SERVES EAC-230
ECU-241 SERVES EAC-241, 242
ECU-244 SERVES EAC-244, 324
CU-246 SERVES AC-246
ECU-251 SERVES EAC-251, 327
ECU-252 SERVES EAC-252, 328
ECU-253 SERVES EAC-253, 259
ECU-254 SERVES EAC-254, 329
CU-262 SERVES AC-262
ECU-264 SERVES EAC-264, 332
CU-274 SERVES AC-274A, 274B, 274C
CU-275 SERVES AC-275
CU-279 SERVES AC-279
CU-280 SERVES AC-280A, 280B

ECU-302 SERVES EAC-302
CU-303 SERVES CU-303, 304A, 315
CU-304B SERVES AC-304BM 322, 323, 325
ECU-309 SERVES EAC-309
ECU-311 SERVES EAC-311
ECU-317 SERVES EAC-317
ECU-321 SERVES EAC-321
ECU-330 SERVES EAC-330

ROOFTOP AIR CONDITIONING UNITS

TAG	MODEL	SUPPLY AIR (CFM)	OA AIR (CFM)	E.S.P. (IN. W.G.)	NOMINAL TONS	NOMINAL HEATING (MBH)	UNIT				DISCONNECT				CONTROLS		REMARKS
							VOLTS	PHASE	MCA	MOCP	SIZE	FUSE	BY	NEMA TYPE	TYPE	BY	
RTU-301	TSC048A3	1,600	320	0.80	4	0	208	3	25.3	35	--	--	WU	--	SA	WU	1,2,3
RTU-313	4TCC3018S	600	100	0.50	1½	0	208	1	10.1	15	--	--	EC	3R	SA	WU	1,2,3

NOTES:
1. BASED ON TRANE, SEE SPECIFICATIONS.
2. 2 INCH FILTER RACK.
3. 100% ECONOMIZER.
4. DUAL COMPRESSOR UNIT.
5. ALTERNATE BID EQUIPMENT.
6. PROVIDE BOLT-ON ERU, 100% O.A.
7. PROVIDE RETURN AIR SMOKE DETECTOR.

ABBREVIATIONS:
WU WITH UNIT
BMS BUILDING MANAGEMENT SYSTEM
EC ELECTRICAL CONTRACTOR
MC MECHANICAL CONTRACTOR
SA STAND ALONE

FANS

FAN NO.	SERVICE	MODEL	CFM	S.P. IN.	WHEEL		RPM	DRIVE	MOTOR			DISCONNECT				STARTER			CONTROLS		REMARKS
					TYPE	DIA. IN.			NOM. HP	PHASE VOLT.	AMPS	SIZE	FUSE	BY	NEMA TYPE	SIZE	BY	NEMA TYPE	TYPE	BY	
EF-207	TOILET EXH	GB-071	200	⅜"	C	7	1260	B	¼	120/1	--	--	--	WU	--	--	WU	--	BMS	MC	1,2
EF-219	TOILET EXH	GB-081	500	⅜"	C	8	1040	B	¼	120/1	--	--	--	WU	--	--	WU	--	BMS	MC	1,2

NOTES:
1. BASED ON GREENHECK.
2. PROVIDE 12 INCH HIGH CURB (FROM FINISHED ROOF, MOTORIZED BACKDRAFT DAMPER, BIRDSCREEN, AND DISCONNECT
3. CONTROL FROM TIME OF DAY SCHEDULE.
4. RUN WITH LIGHTS
5. WIRE TO RUN WITH LIGHTS IN EITHER ROOM.
6. RUN CONTINUOUS.
7. CONTROL FROM REVERSE ACTING THERMOSTAT.
8. WIRE TO RUN FROM CO DETECTION SYSTEM (CO SYSTEM BY MC)

ABBREVIATIONS:
P PROPELLER
C CENTRIFUGAL FAN
WS WALL SWITCH
TC TEMPERATURE CONTROL SYSTEM
EC ELECTRICAL CONTRACTOR
MC MECHANICAL CONTRACTOR
WU WITH UNIT
TT TWIST TIMER

GENERAL NOTES

1. REFER TO SPECIFICATIONS FOR MATERIALS AND EQUIPMENT REQUIREMENTS.
2. COORDINATE WORK WITH ALL OTHER TRADES BEFORE INSTALLATION TO ELIMINATE CONFLICTS.
3. BEFORE DISCONNECTING ANY EXISTING EQUIPMENT, CONFIRM ACTUAL FUNCTION ON-SITE. IF IT APPEARS THAT AN ITEM CALLED TO BE REMOVED SHOULD REMAIN IN SERVICE, DO NOT REMOVE ITEM WITHOUT FURTHER WRITTEN AUTHORIZATION.

◯ KEYED NOTES

1. NOT USED.
2. REMOVE EXHAUST FAN, FILL CURB WITH INSULATION, SEAL TOP OF CURB WEATHER TIGHT.
3. EXHAUST FAN TO REMAIN IN SERVICE.
4. REMOVE VENTILATOR, FILL CURB WITH INSULATION, SEAL TOP OF CURB WEATHER TIGHT.
5. ROOF TOP UNIT TO BE RELOCATED AND REMAIN IN SERVICE, BECOMES RTU-208.
6. PLUMBING VENT THROUGH ROOF TO REMAIN IN SERVICE. EXTEND IN CODE APPROVED MANNER TO A MINIMUM OF 10'0" FROM ALL OUTSIDE AIR INTAKES.
7. REMOVE EXHAUST FAN, CURB, WIRING, ETC., PATCH ROOF OPENING TO MATCH EXISTING MATERIALS, PATCH ROOFING TO MAINTAIN WARRANTY.
8. ROOF CURB AND DISCHARGE CAP FROM EF-318.
9. TRANSITION SUPPLY AND RETURN FROM UNIT TO 24x10 DOWN THROUGH ROOF CURB.
10. WRAP ALL EXTERIOR SHEET METAL DUCT WITH 4 INCHES OF RIGID STROFOAM AND FLEX CLAD 400 DUCT SEALING SYSTEM.
11. EXISTING ROOF TOP UNIT TO REMAIN IN SERVICE.
12. EXISTING CONDENSING UNIT TO REMAIN IN SERVICE. CONFIRM CONNECTION TO EXISTING AC UNITS AND RENUMBER AS NECESSARY.
13. REMOVE ROOF TOP UNIT AND TURN OVER TO THE OWNER. PATCH ROOF DECK AND ROOFING TO MAINTAIN ROOFING WARRANTY.
14. FEED FROM NEW PANEL 3S2, SEE E102, E150.
15. NEMA 3R FUSED DISCONNECT (25A) TO SERVE CU-401.
16. FEED FROM NEW PANEL 3S1, SEE E102, E150.

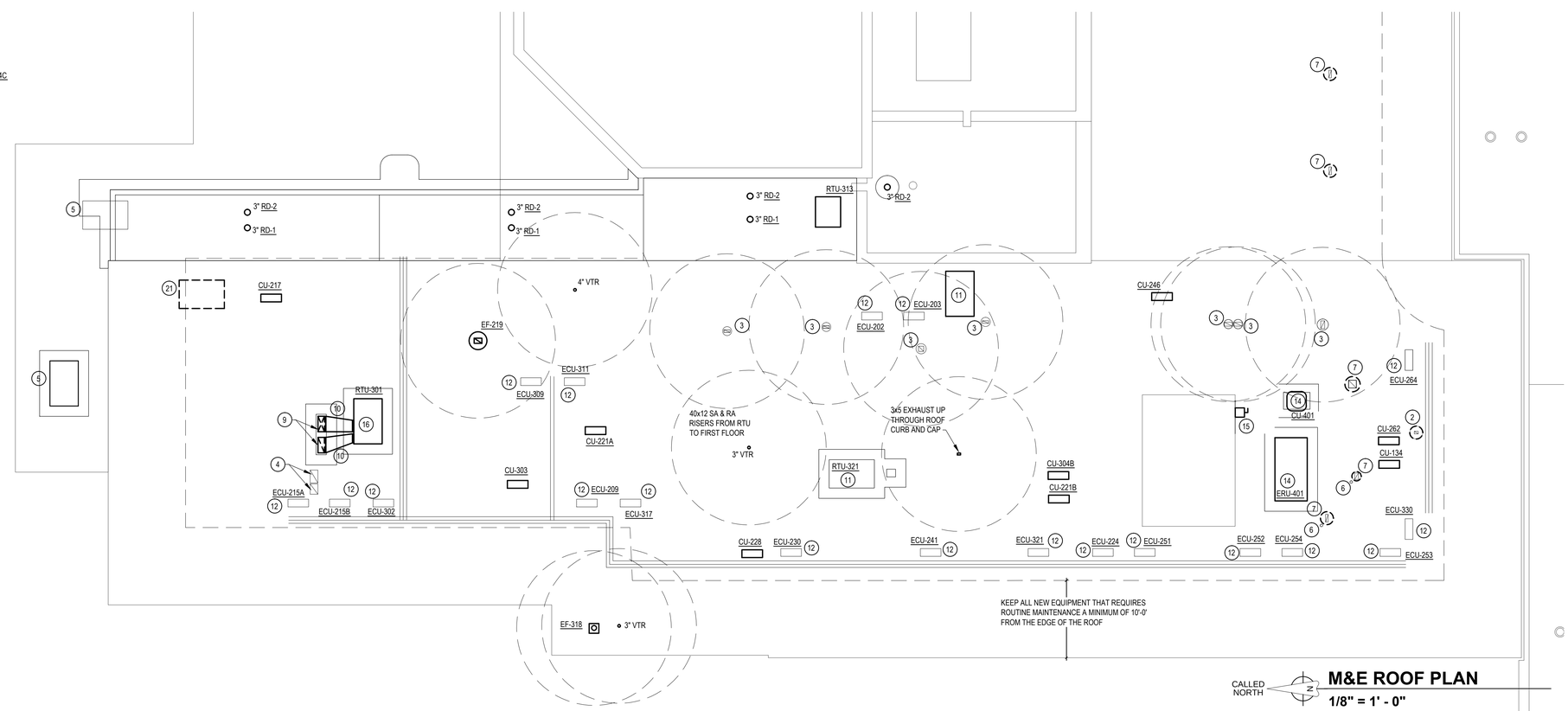

M&E ROOF PLAN
1/8" = 1' - 0"

MORGAN M. LANDON, PE, LLC
2054 Brandon Drive NW
Grand Rapids, Michigan 49504
616-608-3372 fax 616-608-3372
morgan@mlandon.com
Consultant:

Chippewa County
City / County Building Renovation
325 Court Street
Sault Saint Marie, Michigan 49783
Project Title:

Landmark Design Group, P.C.
3900 Linden Ave. S.E. Suite C, Grand Rapids, MI 49548-3406
v: (616) 956-0606

issued for: Bids and Permits
date: 04-09-2012
Seal:
Project Number:
Landmark Project Number: 10-007

© 2012 Landmark Design Group P.C.

ME203

GENERAL NOTES

1. REFER TO SPECIFICATIONS FOR MATERIALS AND EQUIPMENT REQUIREMENTS.
2. COORDINATE WORK WITH ALL OTHER TRADES BEFORE INSTALLATION TO ELIMINATE CONFLICTS.
3. EXISTING RECEPTACLES WHICH ARE NOT SHOWN ARE GENERALLY TO REMAIN IN SERVICE AS IS.
4. NEW RECEPTACLES ARE TO BE CONNECTED TO EXISTING CIRCUITS, NO MORE THAT FIVE RECEPTACLES PER CIRCUIT.
5. PROVIDE NEW BREAKERS IN EXISTING PANEL AS NECESSARY TO SUPPORT REVISED CIRCUITING (IN ADDITION TO NEW BREAKERS IN NEW PANELS).
6. PROVIDE NEW TYPED PANELBOARD SCHEDULE IDENTIFYING SERVICE OF EACH CIRCUIT AS REQUIRED BY CODE.

NOTE:
"D" INDICATES A DEDICATED CIRCUIT FOR THE RECEPTACLE OR EQUIPMENT. NO OTHER LOADS ON THIS CIRCUIT.

◯ KEYED NOTES

1. XLERATOR MODEL XL-SB HAND DRYER, BRUSHED STAINLESS CASING, 120V/1Ø, SENSOR OPERATION.
2. PROVIDE NEW CIRCUIT BREAKER IN EXISTING PANEL TO SERVE NEW RECEPTACLE OR EQUIPMENT.

CALLED NORTH

ELECTRICAL POWER BASEMENT FLOOR PLAN

1/8" = 1' - 0"

MORGAN M. LANDON, PE, LLC
2054 Brandon Drive NW
Grand Rapids, Michigan 49504
616-608-3372 fax 616-608-3372
morgan@mlandon.com

Consultant:

Chippewa County
City / County Building Renovation
325 Court Street
Sault Saint Marie, Michigan 49783

Project Title:

Landmark Design Group, P.C.
3900 Linden Ave. S.E. Suite C, Grand Rapids, MI 49548-3406
v: (616) 956-0606

date:	issued for:
04-09-2012	Bids and Permits

Seal:

Project Number:

Landmark Project Number:
10-007

© 2012 Landmark Design Group P.C.

E100

GENERAL NOTES

1. REFER TO SPECIFICATIONS FOR MATERIALS AND EQUIPMENT REQUIREMENTS.
2. COORDINATE WORK WITH ALL OTHER TRADES BEFORE INSTALLATION TO ELIMINATE CONFLICTS.
3. WHERE RECEPTACLES ARE SHOWN ON EXISTING EXTERIOR WALLS, COORDINATE EXACT LOCATIONS WITH EXISTING CONVECTOR COVERS.
4. IT IS INTENDED THAT RECEPTACLES AND CONDUIT BE CONCEALED AS MUCH AS POSSIBLE, WHERE SHOWN ON EXISTING CONCRETE WALLS WITH NO NEW FIRRING, SURFACE MOUNTED METAL WIREMOLD 2400 SERIES, OR EQUAL, IS ACCEPTABLE. CAREFULLY PLAN ROUTING OF SURFACE FEATURES TO MINIMIZE EXTENT.
5. REFER TO MECHANICAL PLANS AND EXISTING CONDITIONS, COORDINATE BEST RECEPTACLE LOCATIONS ON EXTERIOR WALLS WITH EXISTING AND NEW HEATING EQUIPMENT.
6. DATA RECEPTACLE AND WIRE BY THIS CONTRACTOR TO DATA CLOSET, TERMINATION BY OWNER AT OWNERS EQUIPMENT BY OWNER. IDENTIFY EACH CABLE FOR OWNER'S CONVENIENCE.
7. EXISTING RECEPTACLES WHICH ARE NOT SHOWN ARE GENERALLY TO REMAIN IN SERVICE AS IS.
8. NEW RECEPTACLES ARE TO BE CONNECTED TO EXISTING AND NEW CIRCUITS, NO MORE THAT FIVE RECEPTACLES PER CIRCUIT. "D" INDICATES DEDICATED 20A CIRCUIT FOR THE INDICATED CONNECTION.
9. PROVIDE NEW BREAKERS IN NEW PANELS AS NECESSARY TO SUPPORT REVISED CIRCUITING (IN ADDITION TO NEW BREAKERS IN NEW PANELS).
10. PROVIDE NEW TYPED PANELBOARD SCHEDULE IDENTIFYING SERVICE OF EACH CIRCUIT AS REQUIRED BY CODE.

NOTE:
"D" INDICATES A DEDICATED CIRCUIT FOR THE RECEPTACLE OR EQUIPMENT. NO OTHER LOADS ON THIS CIRCUIT.

KEYED NOTES

1. NEW PANEL TO REPLACE EXISTING, RECONNECT EXISTING WIRING TO NEW CIRCUIT BREAKERS.
2. POKE THROUGH FLOOR BOX, (4) POWER RECEPTACLES, (4) DATA.
3. PROVIDE (2) 2" C FROM BASEMENT TO ABOVE CEILING FOR POWER AND COMMUNICATIONS WIRING.
4. RECEPTACLE AND DATA FOR CEILING PROJECTOR.
5. COORDINATE RECEPTACLE LOCATION WITH MIRROR AND OTHER WALL MOUNTED FEATURES.
6. BOX AND CONDUIT FOR OWNER PROVIDED INTERVIEW OBSERVATION AND RECORDING SYSTEM. COORDINATE EXACT LOCATIONS WITH OWNER BEFORE INSTALLATION.
7. COORDINATE RECEPTACLE LOCATIONS WITH FURNITURE AND MILLWORK.
8. WIREMOLD SERIES 4000, DUAL CHANNEL, SURFACE MOUNTED, STEEL RACEWAY. DUPLEX POWEER RECEPTACLES ON 24" CENTERS, (3) RECEPTACLES ON EACH CIRCUIT. CIRCUIT FROM NEW PANEL 3F2 IN ROOM 247. DATA RECEPTACLE WITH (4) CONNECTIONS EACH ON 24 INCH CENTERS.
9. SEE NOTE 8, PROVIDE 20A, 1P BREAKER TO PROVIDE POWER TO OWNER'S FUME HOOD.
10. CONCEAL RECEPTACLE FOR EWC WITHIN THE BODY OF THE FIXTURE.
11. COORDINATE EXACT POWER REQUIREMENTS WITH COUNTY IT DEPARTMENT BEFORE INSTALLING RECEPTACLES.
12. XLERATOR MODEL XL-SB HAND DRYER, BRUSHED STAINLESS CASING, 120V/1Ø, SENSOR OPERATION.
13. RUN SURFACE MOUNTED STEEL WIREMOLD RACEWAY ON EXISTING MASONRY WALLS TO SERVE NEW RECEPTACLES AND OUTLETS, COLOR TO BE SELECTED.
14. BOX AND CONDUIT FOR OWNER'S INTERVIEW RECORDING SYSTEM. FINALIZE EXACT LOCATION WITH OWNER BEFORE ROUGH-IN.

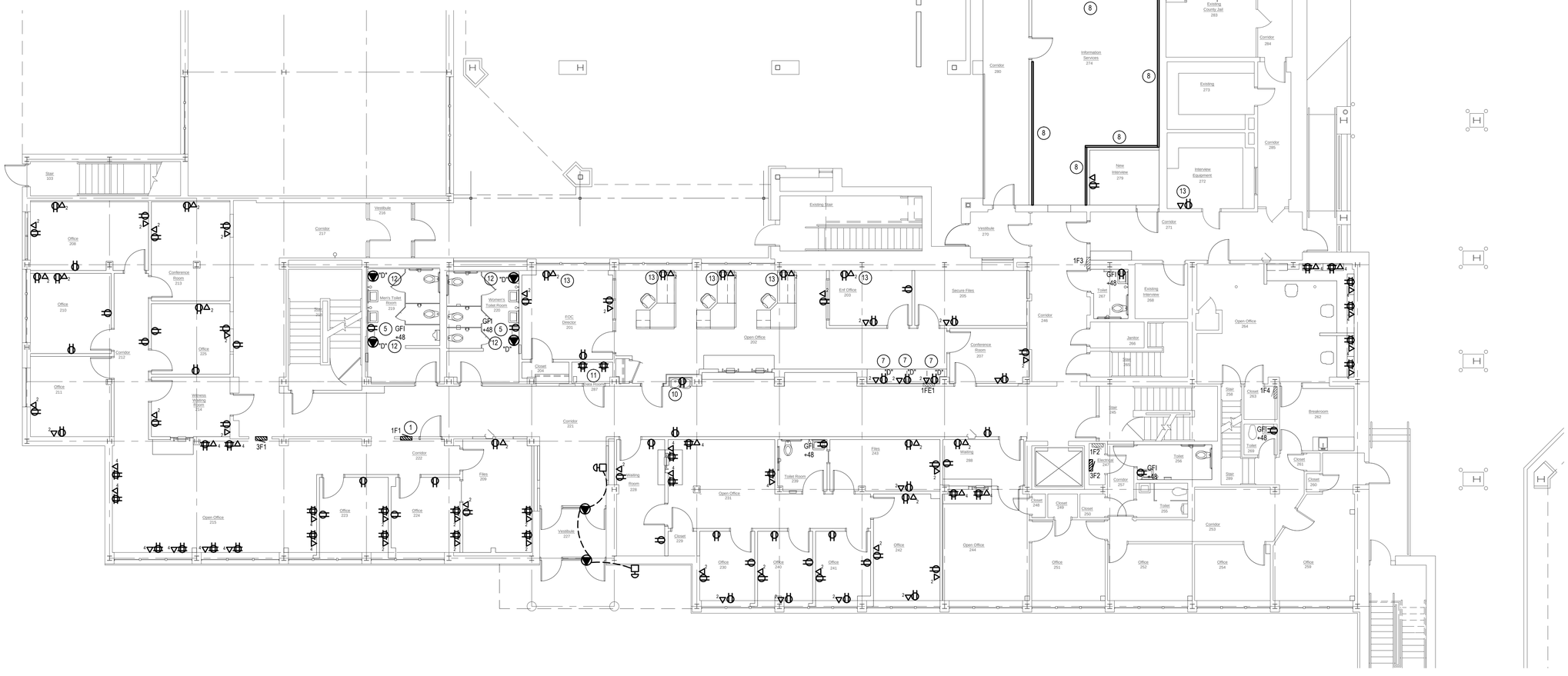

CALLED NORTH

ELECTRICAL POWER FIRST FLOOR PLAN

1/8" = 1' - 0"

Consultant:

MORGAN M. LANDON, PE, LLC
2054 Brandon Drive NW
Grand Rapids, Michigan 49504
616-608-3372 fax 616-608-3372
morgan@mlandon.com

Project Title:

Chippewa County
City / County Building Renovation
325 Court Street
Sault Saint Marie, Michigan 49783

Landmark Design Group, P.C.
3900 Linden Ave. S.E. Suite C, Grand Rapids, MI 49548-3406
v: (616) 956-0606

date:	issued for:
04-09-2012	Bids and Permits

Seal:

Project Number:

Landmark Project Number:
10-007

© 2012 Landmark Design Group P.C.

E101

GENERAL NOTES

1. REFER TO SPECIFICATIONS FOR MATERIALS AND EQUIPMENT REQUIREMENTS.
2. COORDINATE WORK WITH ALL OTHER TRADES BEFORE INSTALLATION TO ELIMINATE CONFLICTS.
3. IT IS INTENDED THAT RECEPTACLES AND CONDUIT BE CONCEALED AS MUCH AS POSSIBLE. WHERE SHOWN ON EXISTING CONCRETE WALLS WITH NO NEW FIRRING, SURFACE MOUNTED METAL WIREMOLD 2400 SERIES, OR EQUAL, IS ACCEPTABLE. CAREFULLY PLAN ROUTING OF SURFACE FEATURES TO MINIMIZE EXTENT.
4. REFER TO MECHANICAL PLANS AND EXISTING CONDITIONS, COORDINATE BEST RECEPTACLE LOCATIONS ON EXTERIOR WALLS WITH EXISTING AND NEW HEATING EQUIPMENT.
5. DATA RECEPTACLE AND WIRE BY THIS CONTRACTOR TO DATA CLOSET, TERMINATION BY OWNER AT OWNERS EQUIPMENT BY OWNER. IDENTIFY EACH CABLE FOR OWNER'S CONVENIENCE.
6. EXISTING RECEPTACLES WHICH ARE NOT SHOWN ARE GENERALLY TO REMAIN IN SERVICE AS IS.
7. NEW RECEPTACLES ARE TO BE CONNECTED TO EXISTING CIRCUITS, NO MORE THAT FIVE RECEPTACLES PER CIRCUIT.
8. PROVIDE NEW BREAKERS IN NEW PANELS AS NECESSARY TO SUPPORT REVISED CIRCUITING (IN ADDITION TO NEW BREAKERS IN NEW PANELS).
9. PROVIDE NEW TYPED PANELBOARD SCHEDULE IDENTIFYING SERVICE OF EACH CIRCUIT AS REQUIRED BY CODE.

NOTE:
"D" INDICATES A DEDICATED CIRCUIT FOR THE RECEPTACLE OR EQUIPMENT. NO OTHER LOADS ON THIS CIRCUIT.

◯ KEYED NOTES

1. NEW PANEL TO REPLACE EXISTING, RECONNECT EXISTING WIRING TO NEW CIRCUIT BREAKERS.
2. 2" C UP FROM BELOW TO 4x4 BOX FOR POWER AND TECHNOLOGY SYSTEMS.
3. POWER AND COMMUNICATIONS UP THROUGH FLOOR BELOW AND THEN THROUGH RAISED PLATFORM TO SERVE RECEPTACLES.
4. PROVIDE (2) 2" C FOR POWER AND COMMUNICATIONS UP FROM BELOW FLOOR TO ABOVE CEILING.
5. POWER AND DATA RECEPTACLES AT CEILING FOR PROJECTOR.
6. POKE THROUGH FLOOR BOX, (4) POWER RECEPTACLES, (4) DATA. COORDINATE EXACT LOCATION IN FIELD WITH OWNER BEFORE INSTALLATION.
7. RECEPTACLES FOR TV.
8. POWER SUPPLY CONNECTION FOR SECURITY DOOR OPERATOR. POWER SUPPLY PROVIDED BY SECURITY CONTRACTOR, POWER CONNECTIONS BY EC.
9. POKE THROUGH FLOOR BOX, (2) POWER RECEPTACLES, (2) DATA. COORDINATE EXACT LOCATION IN FIELD WITH OWNER BEFORE INSTALLATION.
10. HEARING LOOP FOR HEARING AIDS WITH "T-COIL" SETTING. LEAVE CONNECTOR AT JUDGE'S BENCH FOR CONNECTION BY OWNER.
11. CONCEAL RECEPTACLE FOR EWC WITHIN THE BODY OF THE FIXTURE.
12. COORDINATE EXACT POWER REQUIREMENTS WITH COUNTY IT DEPARTMENT BEFORE INSTALLING RECEPTACLES.
13. PROVIDE TAMPER RESISTANT FASTENERS IN SECURE AREAS.
14. GFI RECEPTACLES ABOVE AND BELOW COUNTER AS NECESSARY FOR EQUIPMENT, REFER TO ARCHITECTURAL PLANS FOR ELEVATIONS.

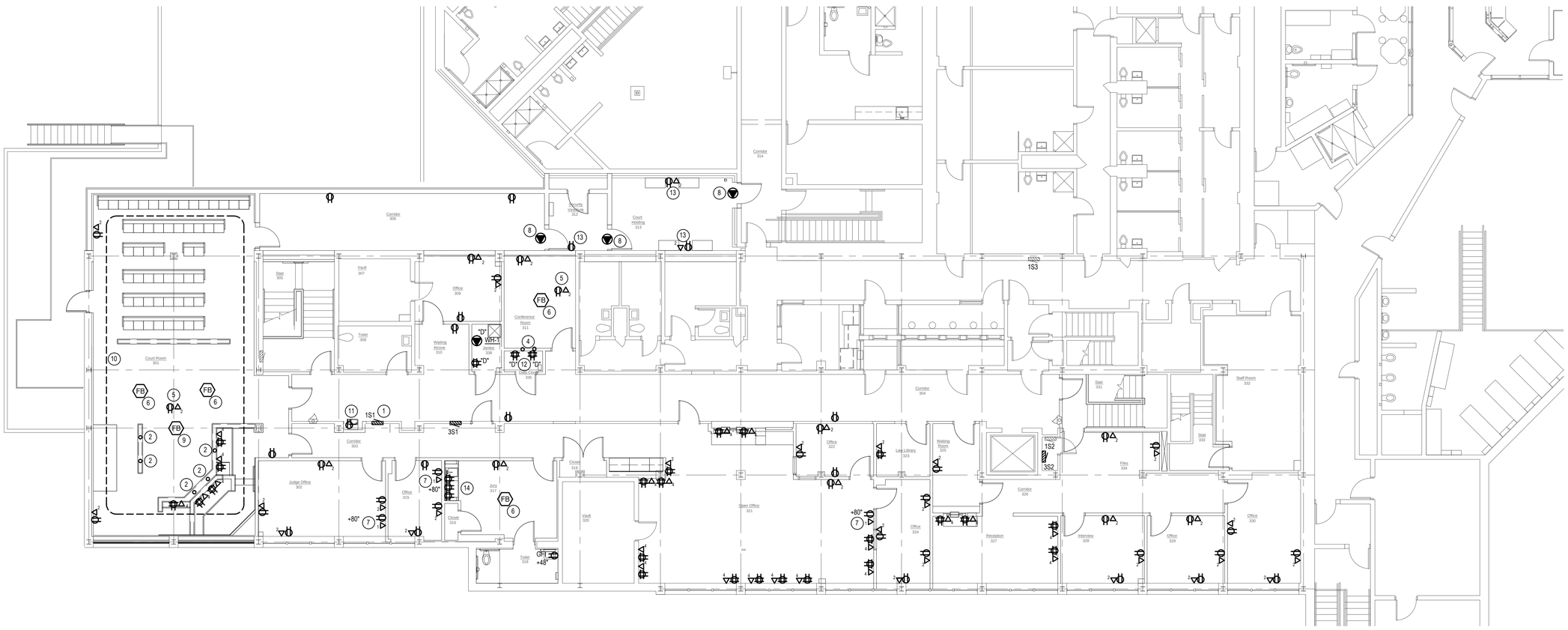

CALLED NORTH

ELECTRICAL POWER SECOND FLOOR PLAN

1/8" = 1' - 0"

MORGAN M. LANDON, PE, LLC
2054 Brandon Drive NW
Grand Rapids, Michigan 49504
616-608-3372 fax 616-608-3372
morgan@mlandon.com

Consultant:

Chippewa County
City / County Building Renovation
325 Court Street
Sault Saint Marie, Michigan 49783

Project Title:

Landmark Design Group, P.C.
3900 Linden Ave. S.E. Suite C, Grand Rapids, MI 49548-3406
v: (616) 956-0606

date:	issued for:
04-09-2012	Bids and Permits

Seal:

Project Number:

Landmark Project Number:

10-007

© 2012 Landmark Design Group P.C.

E102

ABBREVIATIONS

AC	AIR CONDITIONER.	MCP	MOTOR CIRCUIT PROTECTOR.
AFF	ABOVE FINISHED FLOOR.	MH	MOUNTING HEIGHT, MANHOLE.
CB	CIRCUIT BREAKER.	NEC	NATIONAL ELECTRICAL CODE.
CKT	CIRCUIT.	NEMA	NATIONAL ELECTRICAL MANUFACTURERS ASSOCIATION.
CTV	CABLE TELEVISION SYSTEM.	NFS	NON-FUSED SWITCH.
EC	EMPTY CONDUIT.	NIC	NOT IN CONTRACT.
EP	EXPLOSION PROOF.	NL	NIGHT LIGHT.
FS	FUSED SWITCH.	PP	POWER PANEL.
GFI	GROUND FAULT CIRCUIT INTERRUPTER.	RP	RECEPTACLE PANEL.
GND	GROUND.	S/N	SOLID NEUTRAL.
HP	HORSEPOWER.	TC	TELEPHONE OR TERMINAL CABINET.
LP	LIGHTING PANEL.	UG	UNDERGROUND.
MATV	MASTER ANTENNA TELEVISION SYSTEM.	UON	UNLESS OTHERWISE NOTED.
MCC	MOTOR CONTROL CENTER.	WP	WEATHER PROOF.

POWER SHEET SYMBOLS

SYMBOL	DESCRIPTION	SYMBOL	DESCRIPTION
12	GROUNDED DUPLEX RECEPTACLE (NEMA 5-20R); MOUNTED 18" AFF UON; NUMBER INDICATES CIRCUIT.		GROUNDED QUADRUPLEX RECEPTACLE (NEMA 5-15R); MOUNTED 18" AFF UON.
GFI	GROUNDED DUPLEX RECEPTACLE (NEMA 5-15R); GROUND FAULT INTERRUPTOR	A	SPECIAL PURPOSE RECEPTACLE; SEE NOTES
		C	CLOCK RECEPTACLE; MOUNTED 84" AFF UON.
48	GROUNDED DUPLEX RECEPTACLE (NEMA 5-15R) MOUNTED 48" AFF	C	SPECIAL FLOOR RECEPTACLE; LETTER INDICATES TYPE; TYPE DEFINED BY NOTATION OR SCHEDULE.
B	MULTI OUTLET ASSEMBLY; LETTER INDICATES TYPE; TYPE DEFINED BY NOTATION OR SCHEDULE.		GROUNDED SINGLE FLOOR RECEPTACLE (NEMA 5-15R).
			GROUNDED DUPLEX FLOOR RECEPTACLE (NEMA 5-15R).
	THREE PHASE MOTOR	Y FB X Z	ELECTRICAL FLOOR BOX, SEE NOTE 2
N	TELEPHONE, OR DATA OUTLET BOX, SEE NOTE 1	JA	JURY STATUS ANNUNCIATOR
JS	JURY STATUS SWITCH	MH	MAGNETIC DOOR HOLD OPEN DEVICE
	POWER PANEL	T1	TRANSFORMER, SEE SCHEDULE

1. PROVIDE 4x4 BOX WITH CONDUIT TO ACCESSIBLE CEILING SPACE. N = NUMBER OF DATA RECEPTACLES AND CAT 6 CABLE RUNS TO IT ROOM ON SAME FLOOR, SEE DETAIL BELOW.

2. X = NUMBER OF DUPLEX RECEPTACLES
   Y = NUMBER OF DATA RECEPTACLES WITH CAT 6 CABLE RUN TO IT 126
   Z = POWER CIRCUIT NUMBER(S)

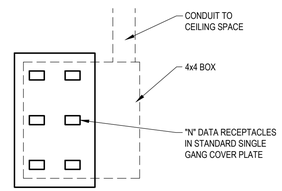

GENERAL ELECTRICAL NOTES

1. ALL WORK IS TO PERFORMED IN STRICT ACCORDANCE WITH THE NATIONAL ELECTRIC CODE, STATE LAWS, AND ALL OTHER REGULATIONS GOVERNING WORK OF THIS NATURE.
2. THE CONTRACTOR SHALL PROVIDE AND PAY FOR ALL WORK, MATERIAL, AND LABOR TO ESTABLISH COMPLETE AND PROPERLY WORKING SYSTEMS.
3. THE CONTRACTOR SHALL OBTAIN AND PAY FOR ALL REQUIRED PERMITS, APPLICATIONS AND FEES AS MAY BE NECESSARY TO COMPLETE THE WORK.
4. FINAL ROUTING OF ALL CONDUITS SHALL BE ESTABLISHED BY THE ELECTRICAL CONTRACTOR IN COORDINATION WITH THE WORK OF ALL OTHER TRADES.
5. FIELD MOUNTED DEVICES SUCH AS SWITCHES, MOTOR STATERS, RECEPTACLES, ETC., ARE SHOWN IN THEIR APPROXIMATE LOCATIONS UNLESS NOTED TO THE CONTRARY ON THE PLANS. COORDINATE EXACT LOCATIONS BASED ON ACTUAL FIELD CONDITIONS.
6. ALL POWER WIRING SHALL BE STRANDED COPPER CONDUCTOR WITH THHN INSULATION RATED 600 VOLTS. MINIMUM WIRE SIZE, 12 AWG.
7. INCREASE WIRE SIZES NOTED ON PLANS OR IN SCHEDULES AS REQUIRED BY CODE FOR LONG RUNS.
8. USE RIGID PVC CONDUIT WHERE BURIED IN CONCRETE, MASONRY, OR OUTDOORS.
9. SERVICE ENTRANCE CONDUIT SHALL BE RIGID PVC.
10. CONDUIT TO DISTRIBUTION PANELS AND HVAC EQUIPMENT SHALL BE EMT.
11. BRANCH CIRCUIT CONDUIT SHALL BE EMT.
12. THE ELECTRICAL CONTRACTOR SHALL PROPERLY GROUND ALL SYSTEMS AND EQUIPMENT IN ACCORDANCE WITH THE REQUIREMENTS OF THE NATIONAL ELECTRIC CODE.
13. RECEPTACLES IN BATHROOMS, AND KITCHENS SHALL BE GFI TYPE.
14. ALL MATERIALS AND EQUIPMENT PROVIDED FOR THIS PROJECT SHALL BE NEW AND UL APPROVED FOR THE INTENDED USE.
15. THE ELECTRICAL CONTRACTOR SHALL COORDINATE THE INSTALLATION OF THE REQUIRED POWER SERVICE WITH THE ELECTRIC UTILITY COMPANY.
16. THE CONTRACTOR SHALL PERFORM ALL REQUIRED TESTING OF ALL ELECTRICAL SYSTEMS. THE CONTRACTOR SHALL CORRECT ALL DEFECTS INDICATED BY TESTING AND THEN RETEST UNTIL SATISFACTORY RESULTS ARE OBTAINED.
17. NO EQUIPMENT SHALL BE ENERGIZED UNTIL ALL TESTS AND ADJUSTMENTS HAVE BEEN COMPLETED.

PANELBOARD SCHEDULE

3MDP EXISTING SQUARE D I-LINE, 120-208V / 3Ø / 4W SERVICE, ADD (3) 200A, 3P BREAKERS AND (1) 125A, 3P BREAKER TO SERVE NEW PANELBOARDS.

3B1 EXISTING 120-208V / 3Ø / 4W PANEL SERVING EXISTING 3Ø LOADS.

3F1 NEW SQUARE D NQ, 120-208V / 3Ø / 4W, 200A MB, (1) 60A 3P FOR HC-301, (1) 25A 2P FOR HC-313, (36) 20A, 1P FOR NEW AND FUTURE LOADS.

3F2 NEW SQUARE D NQ, 120-208V / 3Ø / 4W, 125A MB, (42) 20A, 1P FOR NEW AND FUTURE LOADS.

3S1 NEW SQUARE D NQ, 120-208V / 3Ø / 4W, 200A MB, (1) 35A 3P (RTU-301), (1) 15A 1P (EF-219, (1) 15A 2P (RTU-313), (36) 20A 1P FOR NEW AND FUTURE LOADS.

3S2 NEW SQUARE D NQ, 120-208V / 3Ø / 4W, 200A MB, (1) 25A 3P (ERU-401), (1) 25A 2P (CU-401), 37 20A 1P FOR NEW AND FUTURE LOADS.

1MDP EXISTING 600A SINGLE PHASE DISTRIBUTION PANEL TO REMAIN IN SERVICE.

1B1 EXISTING SINGLE PHASE PANEL TO REMAIN IN SERVICE.

1B2 EXISTING SINGLE PHASE PANEL TO REMAIN IN SERVICE.

1B3 EXISTING PANEL TO REMAIN IN SERVICE.

1F1 NEW SQUARE D NQ, 120-208V / 1Ø / 3W, 42P PANEL TO REPLACE EXISTING. CUT AND PATCH CONCRETE BLOCK WALL AS NECESSARY TO MAINTAIN RECESSED INSTALLATION.

1F2 EXISTING SINGLE PHASE PANEL TO REMAIN IN SERVICE.

1F3 EXISTING SINGLE PHASE PANEL TO REMAIN IN SERVICE.

1S1 NEW SQUARE D NQ, 120-208V / 1Ø / 3W, 42P PANEL TO REPLACE EXISTING. CUT AND PATCH CONCRETE BLOCK WALL AS NECESSARY TO MAINTAIN RECESSED INSTALLATION.

1S2 EXISTING SINGLE PHASE PANEL TO REMAIN IN SERVICE.

1S3 EXISTING SINGLE PHASE PANEL TO REMAIN IN SERVICE.

NOTE:
WHERE EXISTING LOADS FROM EXISTING PANELS ARE TO REMAIN, LEAVE BREAKER AND WIRING IN PLACE. WHERE EXISTING LOADS ARE SHOWN TO BE REMOVED, REMOVE FEEDERS AND CONDUIT BACK TO PANEL.

ONE-LINE DESIGNATIONS

1= SINGLE PHASE

3= THREE PHASE

B= BASEMENT

F= FIRST FLOOR

S= SECOND FLOOR

E= GENERATOR

IE 1F2 IS SINGLE PHASE PANEL ON THE FIRST FLOOR, SECOND ONE.

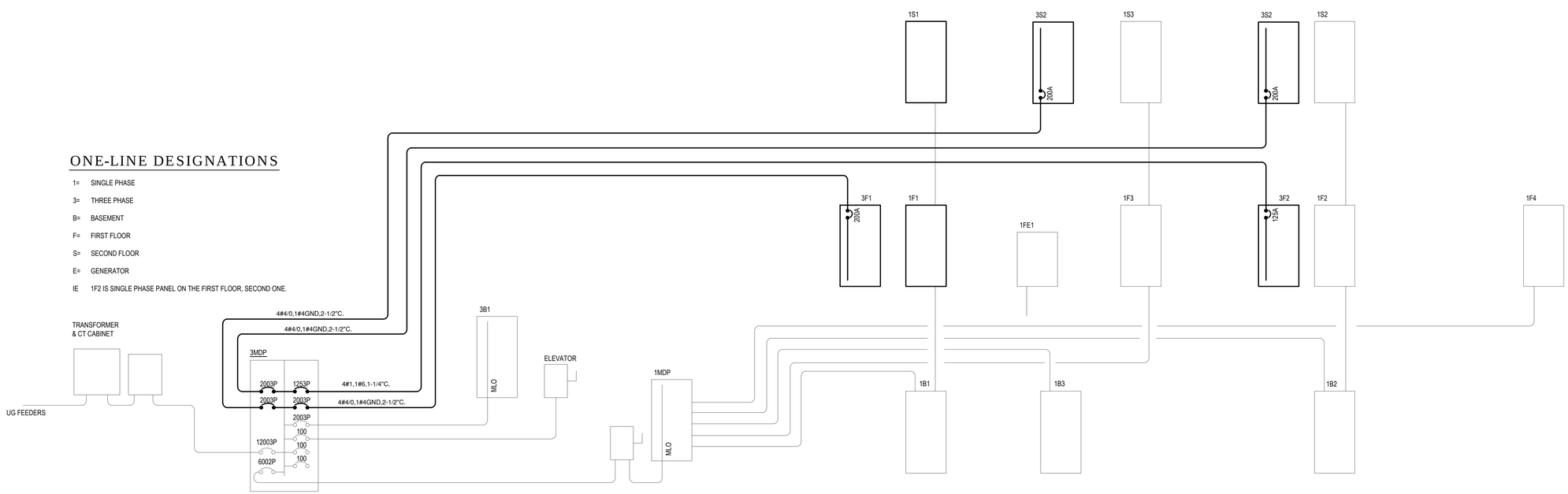

MORGAN M. LANDON, PE, LLC
2054 Brandon Drive NW
Grand Rapids, Michigan 49504
616-608-3372 fax 616-608-3372
morgan@mlandon.com

Consultant:

Chippewa County
City / County Building Renovation
325 Court Street
Sault Saint Marie, Michigan 49783

Project Title:

Landmark Design Group, P.C.
3900 Linden Ave. S.E. Suite C, Grand Rapids, MI 49548-3406
v: (616) 956-0606

issued for:	date:
Bids and Permits	04-09-2012

Seal:

Project Number:

Landmark Project Number:
10-007

© 2012 Landmark Design Group P.C.

E150

GENERAL NOTES

1. REFER TO SPECIFICATIONS FOR MATERIALS AND EQUIPMENT REQUIREMENTS.
2. COORDINATE WORK WITH ALL OTHER TRADES BEFORE INSTALLATION TO ELIMINATE CONFLICTS.
3. WHERE NEW LIGHTS ARE NOT SHOWN, EXISTING LIGHTING IS TO REMAIN IN SERVICE.
4. SURFACE MOUNT CONDUIT AND SWITCHES ON EXISTING CONCRETE WALLS. CONCEAL ON EXISTING AND NEW FRAME WALLS. METAL WIREMOLD CONDUIT WHERE SURFACE MOUNTED.
5. THIS FLOOR HAS VERY LOW HEAD HEIGHT AND MANY EXISTING PIPING SYSTEMS THAT ARE EXPOSED AND WILL REMAIN IN SERVICE. CLOSELY COORDINATE THE LIGHTING LAYOUT BEFORE INSTALLATION TO INSURE BEST LIGHTING SOLUTION FOR EXISTING CONDITIONS.
6. ELC = CONNECT TO EXISTING LIGHTING CIRCUIT. RUN NEW WIRING CONCEALED IF POSSIBLE. IF EXISTING CONCRETE CONSTRUCTION USE METAL WIREMOLD SURFACE MOUNTED RACEWAY AND BOXES TO EXTEND WIRING TO NEW LIGHTING LAYOUT. PROVIDE NEW 20A CIRCUITS FROM NEW PANELS AS NECESSARY TO SUPPLEMENT EXISTING.

KEYED NOTES

1. PORCELAIN FIXTURE AND PROVIDE JUNCTION BOX TO EXISTING CIRCUIT, ALL SURFACE MOUNTED.
2. REMOVE EXISTING LIGHT SWITCH, PROVIDE BLANK COVER.
3. ADJUST LOCATION OF LIGHT FIXTURES TO PROVIDE BEST LIGHT IN SPACE GIVEN LOCATION OF PIPING, ETC.
4. REMOVE EXISTING FIXTURE AND REPLACE WITH NEW (IN SAME LOCATION IF POSSIBLE), EXTEND WITH SURFACE MOUNTED METAL RACEWAY IF NECESSARY.

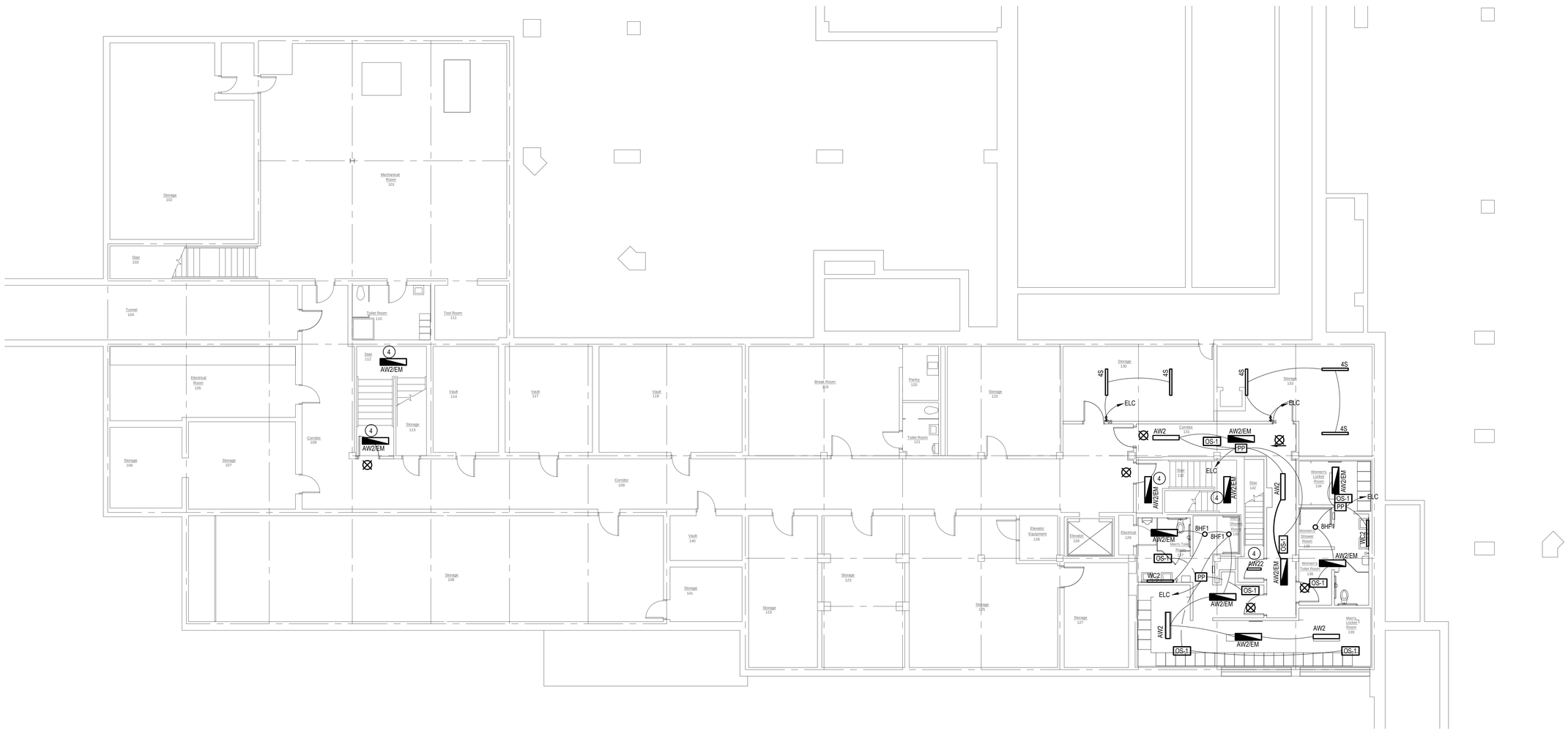

CALLED NORTH

ELECTRICAL LIGHTING BASEMENT FLOOR PLAN

1/8" = 1' - 0"

MORGAN M. LANDON, PE, LLC
2054 Brandon Drive NW
Grand Rapids, Michigan 49504
616-608-3372 fax 616-608-3372
morgan@mlandon.com

Consultant:

Chippewa County
City / County Building Renovation
325 Court Street
Sault Saint Marie, Michigan 49783

Project Title:

Landmark Design Group, P.C.
3900 Linden Ave. S.E. Suite C, Grand Rapids, MI 49548-3406
v: (616) 956-0606

date:	issued for:
04-09-2012	Bids and Permits

Seal:

Project Number:

Landmark Project Number:

10-007

© 2012 Landmark Design Group P.C.

E200

GENERAL NOTES

1. REFER TO SPECIFICATIONS FOR MATERIALS AND EQUIPMENT REQUIREMENTS.
2. COORDINATE WORK WITH ALL OTHER TRADES BEFORE INSTALLATION TO ELIMINATE CONFLICTS.
3. THE SPACE ABOVE THE CEILING IS EXTREMELY LIMITED, CLOSE COORDINATION AMONGST THE TRADES IS REQUIRED TO INSURE PROPER INSTALLATION.
4. SURFACE MOUNT CONDUIT AND SWITCHES ON EXISTING CONCRETE WALLS. CONCEAL ON EXISTING AND NEW FRAME WALLS. METAL WIREMOLD CONDUIT WHERE SURFACE MOUNTED.
6. ELC = CONNECT TO EXISTING LIGHTING CIRCUIT. RUN NEW WIRING CONCEALED IF POSSIBLE. IF EXISTING CONCRETE CONSTRUCTION USE METAL WIREMOLD SURFACE MOUNTED RACEWAY AND BOXES TO EXTEND WIRING TO NEW LIGHTING LAYOUT. PROVIDE NEW 20A CIRCUITS FROM NEW PANELS AS NECESSARY TO SUPPLEMENT EXISTING.
7. WHERE EXISTING CIRCUITS ARE REUSED, PROVIDE NEW TYPED PANELBOARD SCHEDULES TO IDENTIFY LOADS AND LOCATIONS IN ACCORDANCE WITH CURRENT CODES. APPLIES TO ALL NEW AND EXISTING PANELBOARDS.
8. WHERE NO NEW LIGHTING IS SHOWN, EXISTING LIGHTING IS TO REMAIN IN SERVICE.

KEYED NOTES

1. LIGHT SWITCH AND DIMMER TO BE ACTIVE ONLY WHEN SENSOR DETECTS OCCUPANCY IN THE ROOM.
2. DUAL LEVEL SWITCHING.
3. REMOVE EXISTING FIXTURE AND REPLACE WITH NEW (IN SAME LOCATION IF POSSIBLE). EXTEND WITH SURFACE MOUNTED METAL RACEWAY IF NECESSARY.
4. PROVIDE REMOTE HEAD TO PROVIDE CODE REQUIRED LIGHT LEVELS AT EXTERIOR DOOR.
5. EXISTING LIGHTING AND SWITCHES TO REMAIN IN SERVICE IN THIS AREA.

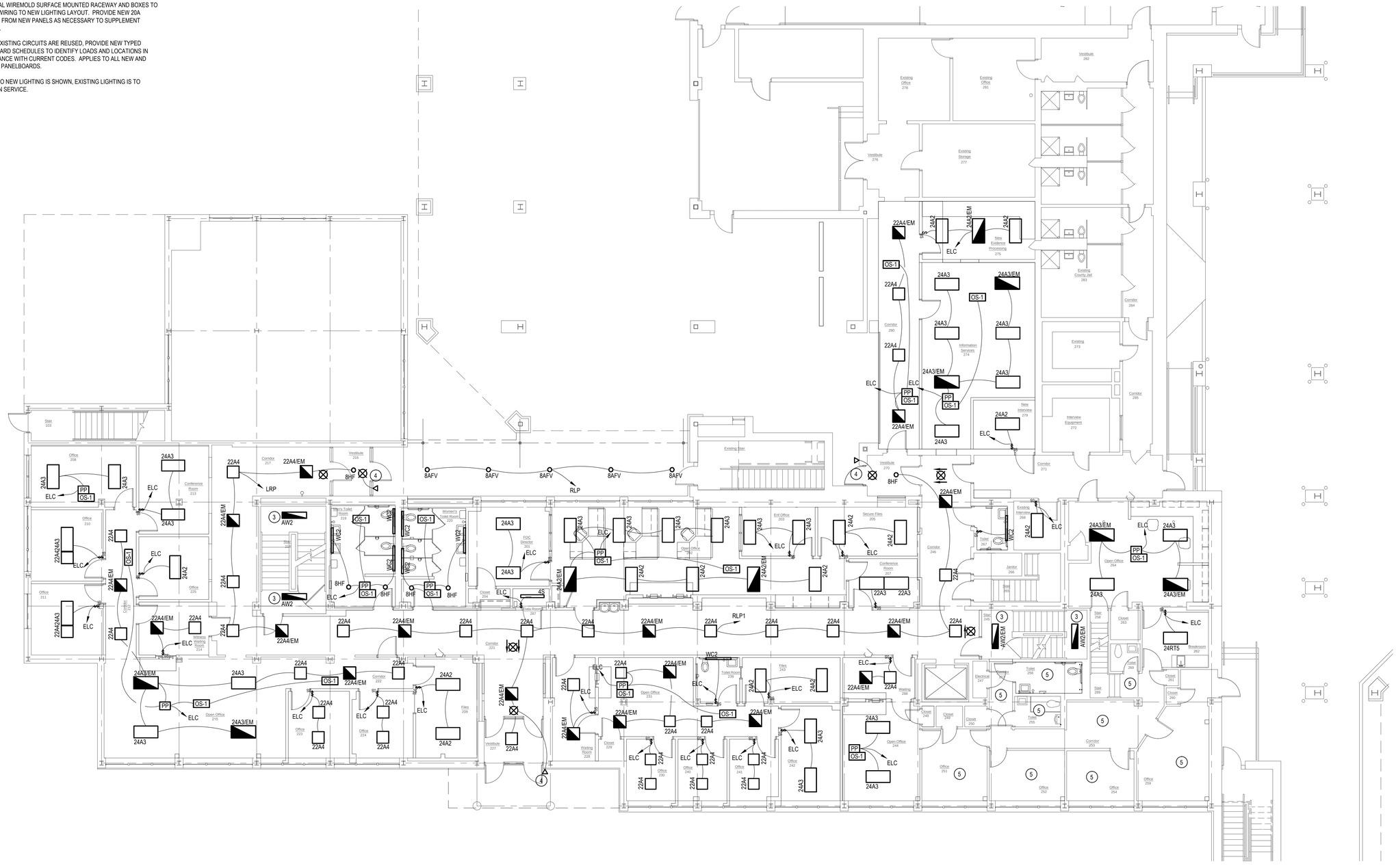

CALLED NORTH

ELECTRICAL LIGHTING FIRST FLOOR PLAN

1/8" = 1' - 0"

Consultant:

MORGAN M. LANDON, PE, LLC
2054 Brandon Drive NW
Grand Rapids, Michigan 49504
616-608-3372 fax 616-608-3372
morgan@mlandon.com

Project Title:

Chippewa County
City / County Building Renovation
325 Court Street
Sault Saint Marie, Michigan 49783

Landmark Design Group, P.C.
3900 Linden Ave. S.E. Suite C, Grand Rapids, MI 49548-3406
v: (616) 956-0606

date:	issued for:
04-09-2012	Bids and Permits

Seal:

Project Number:

Landmark Project Number: 10-007

© 2012 Landmark Design Group P.C.

E201

GENERAL NOTES

1. REFER TO SPECIFICATIONS FOR MATERIALS AND EQUIPMENT REQUIREMENTS.
2. COORDINATE WORK WITH ALL OTHER TRADES BEFORE INSTALLATION TO ELIMINATE CONFLICTS.
3. THE SPACE ABOVE THE CEILING IS EXTREMELY LIMITED, CLOSE COORDINATION AMONGST THE TRADES IS REQUIRED TO INSURE PROPER INSTALLATION.
4. SURFACE MOUNT CONDUIT AND SWITCHES ON EXISTING CONCRETE WALLS. CONCEAL ON EXISTING AND NEW FRAME WALLS. METAL WIREMOLD CONDUIT WHERE SURFACE MOUNTED.
6. ELC = CONNECT TO EXISTING LIGHTING CIRCUIT. RUN NEW WIRING CONCEALED IF POSSIBLE. IF EXISTING CONCRETE CONSTRUCTION USE METAL WIREMOLD SURFACE MOUNTED RACEWAY AND BOXES TO EXTEND WIRING TO NEW LIGHTING LAYOUT. PROVIDE NEW 20A CIRCUITS FROM NEW PANELS AS NECESSARY TO SUPPLEMENT EXISTING.
7. PROVIDE NEW TYPED PANELBOARD SCHEDULES TO IDENTIFY LOADS AND LOCATIONS IN ACCORDANCE WITH CURRENT CODES. APPLIES TO NEW AND EXISTING PANELBOARDS.

KEYED NOTES

1. DUAL LEVEL SWITCHING THROUGH STEP BALLAST FIXTURES.
2. 24 INCH STRIP LIGHT ON WALL ABOVE DOOR, PROVIDE DOOR JAMB SWITCH TO OPERATE.
3. ONLY ACTIVATE DIMMER WHEN OCCUPANCY SENSOR DETECTS ACTIVITY IN THE ROOM.
4. REMOVE EXISTING FIXTURE AND REPLACE WITH NEW (IN SAME LOCATION IF POSSIBLE), EXTEND WITH SURFACE MOUNTED METAL RACEWAY IF NECESSARY.
5. CONTROL SECURITY FIXTURES THROUGH JAIL RELAY PANELS AND SECURITY SYSTEM. POWER FROM GENERATOR BACK-UP CIRCUITS IN JAIL.
6. PENDANT MOUNT LIGHT FIXTURE SO FIXTURE IS APPROX 10'-0" AFF.
7. REMOTE HEAD TO PROVIDE CODE REQUIRED EXTERIOR EXIT LIGHTING.
8. PROVIDE FIXTURES IN THIS ROOM WITH DIMMING BALLASTS, RUN TO DIMMERS MOUNTED AT JUDGES DESK, DIMMER AND BALLASTS TO PROVIDE SILENT DIMMING OPERATION. SEPARATE DIMMERS INDICATED BY D1, D2, ETC.
9. LIGHT SWITCH AND DIMMER TO BE ACTIVE ONLY WHEN SENSOR DETECTS OCCUPANCY IN THE ROOM.

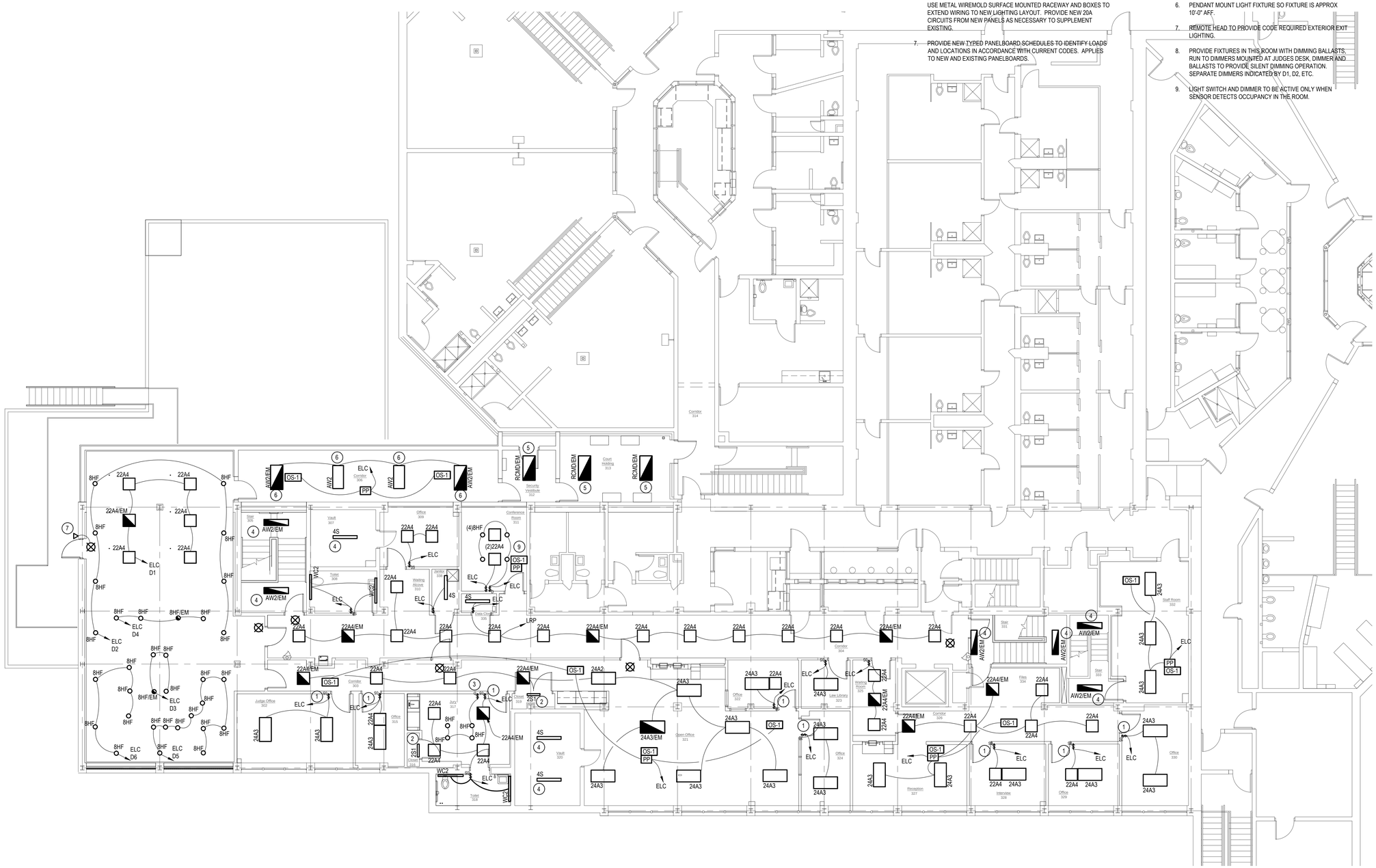

ELECTRICAL LIGHTING SECOND FLOOR PLAN

1/8" = 1' - 0"

MORGAN M. LANDON, PE, LLC
2054 Brandon Drive NW
Grand Rapids, Michigan 49504
616-608-3372 fax 616-608-3372
morgan@mlandon.com

Consultant:

Chippewa County
City / County Building Renovation
325 Court Street
Sault Saint Marie, Michigan 49783

Project Title:

Landmark Design Group, P.C.
3900 Linden Ave. S.E. Suite C, Grand Rapids, MI 49548-3406
v: (616) 956-0606

date:	issued for:
04-09-2012	Bids and Permits

Seal:

Project Number:

Landmark Project Number: 10-007

© 2012 Landmark Design Group P.C.

E202

LUMINAIRE SCHEDULE

Symbol	Label	Qty	Catalog Number	Description	Lamp	File	Lumens	LLF	Watts
	BRM9		BRM9-2-32	8 1/4"W X 1 5/8"H INDIRECT/DIRECT LIGHT WITH SPECULAR REFLECTOR AND DROPED OPAL DIFFUSER	2-F32T8-SP35 RATED @ 2850 LUMENS EACH	BRM9-2-32.ies	2850	1.00	59.5
	AW2		AW 2 32 TUBI	ARCHITECTURAL WRAPAROUND 11.25" X 48" 2 LAMP T8 ELECT	TWO 32-WATT T8 LINEAR FLUORESCENT.	AW_2_32_TUBI.ies	2900	1.00	58
	AW22		AW 2 17 TUBI	ARCHITECTURAL WRAPAROUND 11.25" X 24" 2 LAMP T8 ELECT	TWO 17-WATT T8 LINEAR FLUORESCENT.				
	VL1		CEV217PCE8	FABRICATED WHITE PAINTED METAL STRIP BALLAST HOUSING, TRANSLUCENT WHITE FROSTED ACRYLIC DIFFUSER, FABRICATED SPECULAR METAL DIFFUSER MOUNTING BRACKETS/END CAPS, DIFFUSER FROSTED SIDE OUT.	TWO 17-WATT T-8 F17T8 LINEAR FLUORESCENTS. TWO 25-WATT T-8 F25T8/SPX35 LINEAR FLUORESCENTS. ACTUAL PERFORMANCE MAY VARY.	ITL61484.IES	1260	1.00	34
	4S		C 2 32 MVOLT GEB10IS	GENERAL PURPOSE CHANNEL, 4' 2LP T8 CHAIN HUNG	TWO 32-WATT T8 LINEAR FLUORESCENT. REFLECTOR	C_2_32_MVOLT_GEB10IS.ies	2900	1.00	58
	14RT5		RT5B 1 28T5	VOLUMETRIC LIGHTING, RT5, 1x4, ONE LAMP 28 WATT T5	ONE 28-WATT LINEAR FLUORESCENT T5 PREMIUM, HORIZONTAL POSITION	RT5B_1_28T5.ies	3100	1.00	33.22
	WC2		WC 2 32 TUBI	COMMERCIAL WALL BRACKET 4' 2 LAMP T8 ELEC 0	TWO 32-WATT T8 LINEAR FLUORESCENT.	WC_2_32_TUBI.ies	2900	1.00	58
	24A3		2GT8 3 32 A12 120 ADDE	GT8 GENERAL PURPOSE T8 TROFFER 2'X4' 3 LP T8 #A12 LENS ELEC	THREE 28-WATT FLOURESCENT T8	2GT8_3_32_A12_120_ADDE.ies	4275	1.00	87.0
	22A4		2GT8 4 17 A12 120 ADDE	GT8 GENERAL PURPOSE T8 TROFFER 2'X2' 4 LP T8 #A12 LENS ELEC	FOUR 17-WATT LINEAR FLUORESCENT T8, HORIZONTAL POS.	2GT8_4_17_A12_120_ADDE.ies	1200	1.00	32
	24A2		2GT8 2 32 A12 120 ADDE	GT8 GENERAL PURPOSE T8 TROFFER 2'X4' 2 LP T8 #A12 LENS ELEC	TWO 32-WATT T8 LINEAR FLUORESCENT.	2GT8_2_32_A12_120_ADDE.ies	2850	1.00	58
	8HF		8HF 1/32TRT MVOLT F8O1AZ	8" OPEN DOWNLIGHT SPECULAR REFLECTOR WITH C63 FINISH	ONE 32-WATT TRIPLE TUBE COMPACT FLUORESCENT, HORIZONTAL POS.	8HF_1_32TRT_MVOLT_F8O1AZ.ies	2400	1.00	33.2
	8HF1		8HF 1/32TRT MVOLT F8LS4	8" LENSED DOWNLIGHT WITH WHITE SPLAY, FRESNEL LENS	ONE 32-WATT COMPACT FLUORESCENT TRIPLE TUBE, HORIZONTAL POS.	8HF_1_32TRT_MVOLT_F8LS4.ies	2400	1.00	35
	6HF2		6HF 2/26DTT MVOLT F6L4	6" LENSED DOWNLIGHT WITH WHITE SPLAY, FRESNEL GLASS LENS.	TWO 26-WATT DOUBLE TWIN TUBE COMPACT FLUORESCENT, HORIZONTAL POSITION.	6HF_2_26DTT_MVOLT_F6L4.ies	1800	1.00	
	RCMD		4FL/TR0332IS2 1202/G1UV	2x4 RECESSED SECURITY FIXTURE 14 GA DOOR / HOUSING	(3) 32 W T8 LAMPS TWIN ELECTRONIC BALLAST DUAL LENS PROTECTION TAMPER RESISTANT FASTENERS		2900	1.00	117
	8AFV		8AFV 1/32TRT 8AR MVOLT GVRT CGL SAT	8" LENSED DOWNLIGHT WITH IP RATED TRIM, CLEAR GLASS LENS	ONE 32-WATT COMPACT FLUORESCENT TRIPLE TUBE, VERTICAL POSITION	8HF_1_32TRT_MVOLT_F8LS4.ies	2400	1.00	35

NOTE

WHERE FIXTURES ARE DESIGNATED ON THE PLAN AS "EM" PROVIDE 1,400 LUMEN OUTPUT BATTERY BACK-UP TO PROVIDE EMERGENCY LIGHTING WHEN NORMAL POWER IS LOST.

GENERAL ELECTRICAL NOTES

1. ALL WORK IS TO PERFORMED IN STRICT ACCORDANCE WITH THE NATIONAL ELECTRIC CODE, STATE LAWS, AND ALL OTHER REGULATIONS GOVERNING WORK OF THIS NATURE.
2. THE CONTRACTOR SHALL PROVIDE AND PAY FOR ALL WORK, MATERIAL, AND LABOR TO ESTABLISH COMPLETE AND PROPERLY WORKING SYSTEMS.
3. THE CONTRACTOR SHALL OBTAIN AND PAY FOR ALL REQUIRED PERMITS, APPLICATIONS AND FEES AS MAY BE NECESSARY TO COMPLETE THE WORK.
4. FINAL ROUTING OF ALL CONDUITS SHALL BE ESTABLISHED BY THE ELECTRICAL CONTRACTOR IN COORDINATION WITH THE WORK OF ALL OTHER TRADES.
5. FIELD MOUNTED DEVICES ARE SHOWN IN THEIR APPROXIMATE LOCATIONS UNLESS NOTED TO THE CONTRARY ON THE PLANS. COORDINATE EXACT LOCATIONS BASED ON ACTUAL FIELD CONDITIONS.
6. ALL MATERIALS AND EQUIPMENT PROVIDED FOR THIS PROJECT SHALL BE NEW AND UL APPROVED FOR THE INTENDED USE.
7. THE CONTRACTOR SHALL PERFORM ALL REQUIRED TESTING OF ALL ELECTRICAL SYSTEMS. THE CONTRACTOR SHALL CORRECT ALL DEFECTS INDICATED BY TESTING AND THEN RETEST UNTIL SATISFACTORY RESULTS ARE OBTAINED.
8. NO EQUIPMENT SHALL BE ENERGIZED UNTIL ALL TESTS AND ADJUSTMENTS HAVE BEEN COMPLETED.

ABBREVIATIONS

AC	AIR CONDITIONER	MCC	MOTOR CONTROL CENTER
AFF	ABOVE FINISHED FLOOR	MCP	MOTOR CIRCUIT PROTECTOR
CB	CIRCUIT BREAKER	MH	MOUNTING HEIGHT, MANHOLE
CKT	CIRCUIT	NEC	NATIONAL ELECTRICAL CODE
CTV	CABLE TELEVISION SYSTEM	NEMA	NATIONAL ELECTRICAL MANUFACTURERS ASSOCIATION
ELC	EXISTING LIGHTING CIRCUIT	NFS	NON-FUSED SWITCH
EEMLC	EXISTING EMERGENCY LIGHTING CIRCUIT	NIC	NOT IN CONTRACT
EC	EMPTY CONDUIT	NL	NIGHT LIGHT
EP	EXPLOSION PROOF	PP	POWER PANEL
FS	FUSED SWITCH	RP	RECEPTACLE PANEL
GFI	GROUND FAULT CIRCUIT INTERRUPTER	S/N	SOLID NEUTRAL
GND	GROUND	TC	TELEPHONE OR TERMINAL CABINET
HP	HORSEPOWER	UG	UNDERGROUND
LP	LIGHTING PANEL	UON	UNLESS OTHERWISE NOTED
MATV	MASTER ANTENNA TELEVISION SYSTEM	WP	WEATHER PROOF
LRP	LIGHTING RELAY PANEL		

OCCUPANCY SENSOR SCHEDULE

TYPE	DESCRIPTION	MOUNTING	MOUNTING HGT.	MANUFACTURERS NO.	NOTES
S_{DS}	WALL MOUNTED DUAL TECH	RECESSED	+48"	LUTRON LOS-S SERIES	1, 2
OS-1	WALL MTD. DUAL TECH	SURFACE	+80"	LUTRON LOS-W SERIES	
OS-2	CLG MTD. DUAL TECH	SURFACE	-	LUTRON LOS-C SERIES	
PP	POWER PACK	NIPPLE	ABOVE CLG.	LUTRON TO SUIT SENSORS	
S_T	TIMER SWITCH	RECESSED	+48"		
S_{DS}	DOOR JAMB SWITCH	RECESSED	AS REQ.	EDWARDS #DN415	

OR EQUAL BY LEVITON

NOTE:

1. SEE SPECIFICATIONS FOR COLOR, BLACK WITH SS COVER PLATE IS TYPICAL.
2. PROVIDE DUAL LIGHT LEVEL CAPABILITY AND WIRING CONNECTIONS.

LIGHTING RELAY PANEL

RELAY NUMBER	CONTROLS	CIRCUIT NUMBER
RP1-1	AS NOTED ON PLANS	***
RP1-2		
RP1-3		
RP1-4		
RP1-5		
RP1-6		
RP1-7		
RP1-8		
RP1-9		
RP1-10		
RP1-11		
RP1-12		

*** AS DETERMINED IN FIELD

Consultant:

MORGAN M. LANDON, PE, LLC
2054 Brandon Drive NW
Grand Rapids, Michigan 49504
616-608-3372 fax 616-608-3372
morgan@mlandon.com

Project Title:

Chippewa County
City / County Building Renovation
325 Court Street
Sault Saint Marie, Michigan 49783

Landmark Design Group, P.C.
3900 Linden Ave., S.E. Suite C, Grand Rapids, MI 49548-3406
v: (616) 956-0606

issued for:	date:
Bids and Permits	04-09-2012

Seal:

Project Number:

Landmark Project Number:

10-007

© 2012 Landmark Design Group P.C.

E250

SECURITY CAMERAS

TAG	d	w	h	MOUNTING	REMARKS/NOTES
C216	20	6	6	EXT. WALL	1,2,6
C217	16	6	6	INT. CEILING	1
C246	30	10	10	INT. CEILING	1
C301A	10	6	6	EXT. WALL	1,2,6
C301B	35	24	8	INT. CEILING	1
C301C	18	6	6	INT. CEILING	1
C301D	40	24	6	INT. CEILING	1
C312A	12	6	6	INT. CORNER	1,4,5
C312B	12	6	6	INT. CORNER	1,4,5
C313A	16	6	6	INT. CEILING	1,4
C313B	16	6	6	INT. CEILING	1,4
C314	12	6	6	INT. CEILING	1,4

1. PELCO, HEAVY DUTY, FIXED, COLOR, OR EQUAL.
2. EXTERIOR, WEATHERPROOF, WITH HEATERS, SEE SPECS.
3. MOUNT ON POLE FOR SITE LIGHTING.
4. HIGH IMPACT CONSTRUCTION, TAMPERPROOF MOUNTING.
5. VICON, CORNER MOUNT, HIGH SECURITY, SUICIDE RESISTANT.
6. PROVIDE WALL MOUNTING ARM.
7. BID ALTERNATE, NOT IN BASE BID.
8. RESOLUTION TO BE 80 PIXELS/FT FOR DEFINED AREA.

ABBREVIATIONS

AC	AIR CONDITIONER.	MCP	MOTOR CIRCUIT PROTECTOR.
AFF	ABOVE FINISHED FLOOR.	MH	MOUNTING HEIGHT, MANHOLE.
BA	BID ALTERNATE, SEE NOTES	NEC	NATIONAL ELECTRICAL CODE.
CB	CIRCUIT BREAKER.	NEMA	NATIONAL ELECTRICAL MANUFACTURERS ASSOCIATION.
CKT	CIRCUIT.	NFS	NON-FUSED SWITCH.
CTV	CABLE TELEVISION SYSTEM.	NIC	NOT IN CONTRACT.
EC	EMPTY CONDUIT.	NL	NIGHT LIGHT.
EP	EXPLOSION PROOF.	PP	POWER PANEL.
FS	FUSED SWITCH.	RP	RECEPTACLE PANEL.
GFI	GROUND FAULT CIRCUIT INTERRUPTER.	S/N	SOLID NEUTRAL
GND	GROUND.	TC	TELEPHONE OR TERMINAL CABINET.
HP	HORSEPOWER.	UG	UNDERGROUND.
LP	LIGHTING PANEL.	UON	UNLESS OTHERWISE NOTED.
MATV	MASTER ANTENNA TELEVISION SYSTEM.	WP	WEATHER PROOF.
MCC	MOTOR CONTROL CENTER.		

NOTE: REFER TO BID SCOPE DOCUMENTS FOR DETAILED DESCRIPTION OF ALTERNATE BID ITEMS.

SPECIAL SYSTEMS SHEET SYMBOLS

SYMBOL	DESCRIPTION	SYMBOL	DESCRIPTION
F	FIRE ALARM PULL STATION	H	HEAT DETECTOR
F	FIRE ALARM HORN (FAH)	F	FIRE ALARM BELL
F cd30	FAH WITH STROBE LIGHT, # INDICATES CANDELA RATING	FAP	FIRE ALARM PANEL
F cd30	FA STROBE LIGHT, # INDICATES CANDELA RATING	AP	FIRE ANNUNCIATOR PANEL
SD C,D,W	PHOTOELECTRIC SMOKE DETECTOR, CEILING, DUCT, WALL	IC W	INTERCOM, WALL MOUNT, RECESSED
CR W,F	CARD READER, WALL OR FRAME MOUNT, RECESSED	IC F	INTERCOM, FRAME MOUNT, RECESSED
DM	DOOR MONITOR	KP	KEY PAD
DC	DOOR CONTROL	ML	MAGNETIC LOCK
DS	DURESS SWITCH		PUSH BUTTON
S	PAGING SYSTEM SPEAKER	VP	VISITATION PHONE
MH	MAGNETIC DOOR HOLD OPEN	E	WITH ANY DEVICE = EXISTING TO REMAIN IN SERVICE
CXXX +XXX	SECURITY CAMERA, SEE SCHEDULE CAMERA NUMBER MOUNTING HEIGHT, INCHES		

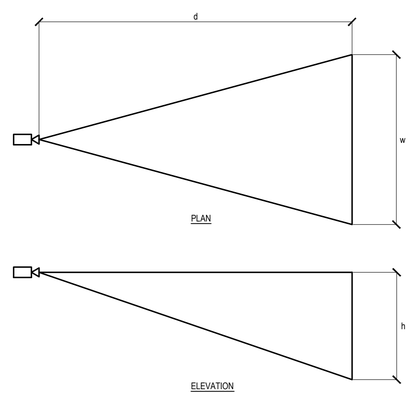

CAMERA SELECTION SHALL PROVIDE A MINIMUM RESOLUTION OF 40 PIXELS/FT AT ANY POINT IN THE VIEWING AREA (w x h). TOTAL VIEWING AREA SHALL NOT BE LIMITED TO DIMENSIONS SHOWN ON SCHEDULE.

THE PLANS AND SCHEDULE INDICATE THE INTENDED RESULTS OF FINAL CAMERA SELECTIONS. IN ALL CASES A SINGLE CAMERA IN A STANDARD DOME (OR CORNER ENCLOSURE) IS INTENDED.

1 E400 **TYPICAL CAMERA LAYOUT**
NO SCALE

GENERAL ELECTRICAL NOTES

1. ALL WORK IS TO PERFORMED IN STRICT ACCORDANCE WITH THE NATIONAL ELECTRIC CODE, STATE LAWS, AND ALL OTHER REGULATIONS GOVERNING WORK OF THIS NATURE.
2. THE CONTRACTOR SHALL PROVIDE AND PAY FOR ALL WORK, MATERIAL, AND LABOR TO ESTABLISH COMPLETE AND PROPERLY WORKING SYSTEMS.
3. THE CONTRACTOR SHALL OBTAIN AND PAY FOR ALL REQUIRED PERMITS, APPLICATIONS AND FEES AS MAY BE NECESSARY TO COMPLETE THE WORK.
4. FINAL ROUTING OF ALL CONDUITS SHALL BE ESTABLISHED BY THE ELECTRICAL CONTRACTOR IN COORDINATION WITH THE WORK OF ALL OTHER TRADES.
5. FIELD MOUNTED DEVICES ARE SHOWN IN THEIR APPROXIMATE LOCATIONS UNLESS NOTED TO THE CONTRARY ON THE PLANS. COORDINATE EXACT LOCATIONS BASED ON ACTUAL FIELD CONDITIONS.
6. THE ELECTRICAL CONTRACTOR SHALL PROPERLY GROUND ALL SYSTEMS AND EQUIPMENT IN ACCORDANCE WITH THE REQUIREMENTS OF THE NATIONAL ELECTRIC CODE.
7. ALL MATERIALS AND EQUIPMENT PROVIDED FOR THIS PROJECT SHALL BE NEW AND UL APPROVED FOR THE INTENDED USE.
8. THE CONTRACTOR SHALL PERFORM ALL REQUIRED TESTING OF ALL ELECTRICAL SYSTEMS. THE CONTRACTOR SHALL CORRECT ALL DEFECTS INDICATED BY TESTING AND THEN RETEST UNTIL SATISFACTORY RESULTS ARE OBTAINED.
9. NO EQUIPMENT SHALL BE ENERGIZED UNTIL ALL TESTS AND ADJUSTMENTS HAVE BEEN COMPLETED.

FIRE ALARM SYSTEM INSTALLATION NOTES

1. THE FIRE ALARM SYSTEM IS A DESIGN - BUILD SYSTEM. THE CONTRACTOR SHALL DESIGN, PROVIDE, AND INSTALL A COMPLETE, CODE COMPLIANT SYSTEM AS REQUIRED BY ALL APPLICABLE CODES AND STANDARDS, SEE SPECIFICATIONS. THE FIRE ALARM CONTRACTOR SHALL MAKE ALL REQUIRED SUBMITTALS TO THE AUTHORITIES HAVING JURISDICTION AND SHALL OBTAIN APPROVAL OF SAME AS A PART OF BASE BID FOR THE WORK OF THIS PROJECT.
2. EXISTING FIRE ALARM SYSTEM DRAWINGS ARE AVAILABLE FOR REVIEW.
3. THE FIRE ALARM SYSTEM SHALL BE INSTALLED AS TO BE IN FULL COMPLIANCE WITH NFPA 72, AS WELL AS ALL RULES, CODES, ORDINANCES, ORDERS, AND OTHER LEGAL REQUIREMENTS OF THE AUTHORITIES HAVING JURISDICTION.
4. THE ELECTRICAL CONTRACTOR SHALL INSTALL THE FIRE ALARM SYSTEM COMPLETE AND OPERABLE AS REQUIRED BY CODE. ALL MATERIALS, LABOR, AND EQUIPMENT REQUIRED TO PROPERLY COMPLETE THE SYSTEM INSTALLATION SHALL BE PROVIDED BY THE CONTRACTOR AS A PART OF HIS BASE BID ON THE PROJECT.
5. FURNISH AND INSTALL AN ADDRESSABLE FIRE ALARM SYSTEM COMPLETE WITH CONTROL PANEL(S), STYLE A INITIATING DEVICE CIRCUITRY, AND STYLE Y INITIATING APPLIANCE CIRCUITRY. BATTERY BACKUP OPERATION SHALL BE FOR A MINIMUM OF 48 HOURS WITH T FIVE MINUTE RUNDOWN AT THE END OF THE 48 HOUR PERIOD. PROVIDE A NAMEPLATE READING "FIRE ALARM CONTROL PANEL" ON THE FRONT OF EACH REQUIRED PANEL. INSTALL FIRE DEPARTMENT LOCK, AS REQUIRED.
6. INSTALL ½" EMT CONDUIT (MINIMUM) FOR ALL CABLE.
7. FIRE ALARM CABLE SHALL BE SOLID CONDUCTOR.
8. FURNISH AND INSTALL END-OF-LINE RESISTORS AND CLEARLY MARK THE LOCATION OF THE DEVICE.
9. BAG ALL SMOKE DETECTORS UNTIL FINAL FIRE DEPARTMENT INSPECTION.
10. FURNISH AND INSTALL ALL REQUIRED PULL STATIONS, SMOKE DETECTORS, HEAT DETECTORS, HORNS, AND HORN/STROBES. STROBES TO HAVE ADJUSTABLE CANDELLA RATINGS.
11. CONNECT DUCT SMOKE DETECTORS IN THE HVAC SYSTEM (FURNISHED BY THE ELECTRICAL CONTRACTOR AND INSTALLED IN THE DUCT BY THE MECHANICAL CONTRACTOR) TO ACTIVATE THE FIRE ALARM SYSTEM AND SHUTDOWN THE HVAC SYSTEM IN THE EVENT OF SMOKE DETECTOR ACTIVATION.
12. ALL FIRE ALARM SYSTEM COMPONENTS SHALL BE UL LISTED.
13. FURNISH AND INSTALL FIRE PROTECTION SPRINKLER SYSTEM TAMPER AND FLOW SWITCHES ACCORDING TO THE REQUIREMENTS OF THE AUTHORITY HAVING JURISDICTION.
14. DUCT MOUNTED SMOKE DETECTORS, WHERE INSTALLED ABOVE CEILINGS, SHALL HAVE A CEILING MOUNTED TEST STATION.
15. PROVIDE CODE REQUIRED SIGNALS FROM EXISTING FIRE ALARM SYSTEM TO BE INTEGRATED INTO NEW SYSTEM.

SECURITY SYSTEM GENERAL OPERATIONAL NOTES

1. REFER TO SPECIFICATIONS FOR COMPLETE SYSTEM DESCRIPTION. IT IS INTENDED THAT OPERATIONAL FUNCTIONS BE PROVIDED IN TWO DISTINCT AND SEPARATE WAYS.
   A. FUNCTIONS THAT ARE PART OF THE JAIL SECURITY SYSTEM AS SO NOTED ON THE PLANS (GENERALLY ASSOCIATED WITH THE NEW PRISONER ACCESS CORRIDOR TO THE COURT ROOM) SHALL BE AN EXTENSION OF THE EXISTING JAIL SECURITY AND CONTROL SYSTEM. THIS WORK IS TO BE PERFORMED BY THE OWNER AND IS NOT TO BE INCLUDED IN THE BID PRICE FOR THIS PROJECT.
   B. ALL OTHER SECURITY CONTROL FUNCTIONS ARE TO BE PREFORMED THROUGH A NEW, STAND ALONE, SYSTEM AS DESCRIBED IN THE SPECIFICATIONS AND SHOWN ON THE PLANS. ALL WORK ASSOCIATED WITH THIS SYSTEM IS TO BE INCLUDED IN THE BASE BID WORK FOR THIS PROJECT.
2. OPERATION OF AN INTERCOM STATION SHALL RESULT IN AUTOMATIC DISPLAY OF THE RELATED CAMERA ON THE OPERATORS SCREEN IN THE JAIL MASTER CONTROL ROOM. THE SYSTEM SHALL QUEUE SUCH REQUESTS FOR THE OPERATORS RESPONSE IN ORDER OF RECEIPT.
3. THE ESCS SHALL CONTROL THE LIGHTING IN NEW SECURE AREAS. GENERALLY, EACH AREA SHALL HAVE TWO LEVELS OF LIGHTING CONTROL (NOT INCLUDING "OFF"). THE ESCS SHALL HAVE THE ABILITY TO CONTROL EACH OF THESE LIGHT LEVELS ON A TIME OF DAY SCHEDULE (MINIMUM OF FIVE (5) SEPARATE SCHEDULES), IN ADDITION TO THE MANUAL CONTROL OF EACH AREA.
4. ALL NEW CAMERAS SHALL BE DIGITALLY RECORDED.
5. NEW CAMERAS IN SUCURE AREAS SHALL BE INTEGRATED INTO THE EXISTING SYSTEM TO DISPLAY AT THE MASTER CONTROL ROOM AS DESIRED BY THE OWNER. CAMERAS OUTSIDE SECURE AREAS SHALL BE DIPLAYED ON MONITORS OR PC'S AS DESIRED BY THE OWNER. INCLUDE ALL NECESSARY PROGRAMMING IN THE BASE BID FOR THE PROJECT.

MORGAN M. LANDON, PE, LLC
2054 Brandon Drive NW
Grand Rapids, Michigan 49504
616-608-3372 fax 616-608-3372
morgan@mlandon.com

Consultant:

Chippewa County
City / County Building Renovation
325 Court Street
Sault Saint Marie, Michigan 49783

Project Title:

Landmark Design Group, P.C.
3900 Linden Ave. S.E. Suite C, Grand Rapids, MI 49548-3406
v: (616) 956-0606

date:	issued for:
04-09-2012	Bids and Permits

Seal:

Project Number:

Landmark Project Number:
10-007

© 2012 Landmark Design Group P.C.

SS000

GENERAL NOTES

1. REFER TO SPECIFICATIONS FOR MATERIALS AND EQUIPMENT REQUIREMENTS.
2. COORDINATE WORK WITH ALL OTHER TRADES BEFORE INSTALLATION TO ELIMINATE CONFLICTS.
3. SPECIFICATIONS REQUIRE A COMPLETE, NEW FIRE ALARM SYSTEM TO COMPLY WITH CURRENT CODES. DEVICES SHOWN ON THIS PLAN ARE FOR REFERENCE ONLY.

◯ KEYED NOTES

1. ARRANGE DOOR CONTROLS TO ALLOW FREE EXIT THROUGH THIS DOOR.

SPECIAL SYSTEMS BASEMENT FLOOR PLAN

1/8" = 1' - 0"

CALLED NORTH

MORGAN M. LANDON, PE, LLC
2054 Brandon Drive NW
Grand Rapids, Michigan 49504
616-608-3372 fax 616-608-3372
morgan@mlandon.com

Consultant:

Chippewa County
City / County Building Renovation
325 Court Street
Sault Saint Marie, Michigan 49783

Project Title:

Landmark Design Group, P.C.
3900 Linden Ave. S.E. Suite C, Grand Rapids, MI 49548-3406
v: (616) 956-0606

date:	issued for:
04-09-2012	Bids and Permits

Seal:

Project Number:

Landmark Project Number:

10-007

© 2012 Landmark Design Group P.C.

SS100

GENERAL NOTES

1. REFER TO SPECIFICATIONS FOR MATERIALS AND EQUIPMENT REQUIREMENTS.
2. COORDINATE WORK WITH ALL OTHER TRADES BEFORE INSTALLATION TO ELIMINATE CONFLICTS.
3. SPECIFICATIONS REQUIRE A COMPLETE, NEW FIRE ALARM SYSTEM TO COMPLY WITH CURRENT CODES. DEVICES SHOWN ON THIS PLAN ARE FOR REFERENCE ONLY.

KEYED NOTES

1. DURESS SWITCH LOCATION TO BE COORDINATED WITH OWNER BEFORE INSTALLATION.
2. THESE ITEMS ARE TO BE MADE PART OF THE EXISTING JAIL SECURITY CONTROL SYSTEM.
3. NOT USED.
4. NOT USED.
5. WHEN THE DURESS SWITCH IS ACTIVATED AN ALARM IS GENERATED IDENTIFYING THE SPECIFIC LOCATION. THIS ALARM IS TO BE SENT TO: 1) THE MASTER CONTROL ROOM IN THE JAIL; 2) THE CITY POLICE STATION; AND 3) THE COUNTY 911 DISPATCH CENTER.

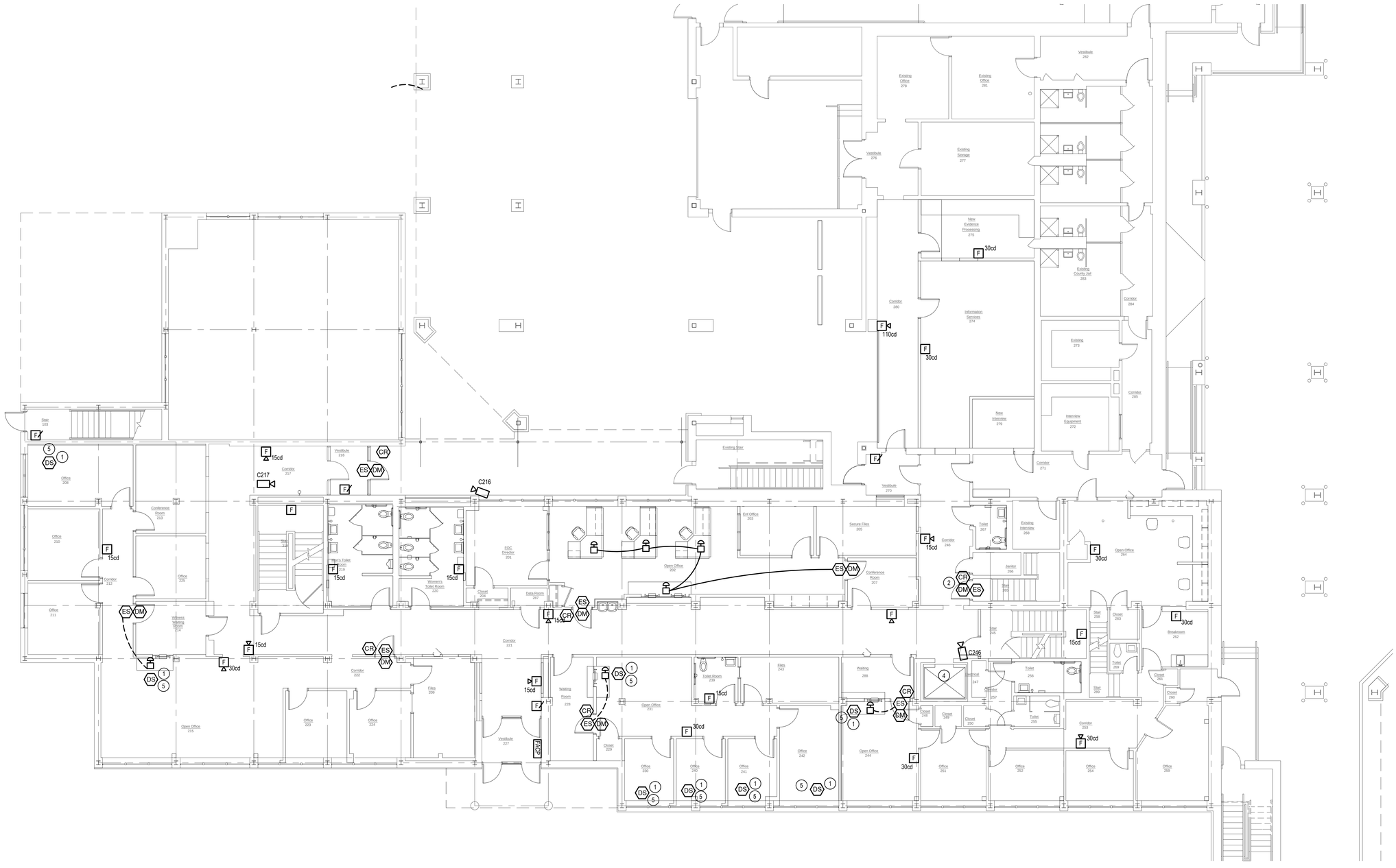

CALLED NORTH

SPECIAL SYSTEMS FIRST FLOOR PLAN

1/8" = 1' - 0"

Consultant:

MORGAN M. LANDON, PE, LLC
2054 Brandon Drive NW
Grand Rapids, Michigan 49504
616-608-3372 fax 616-608-3372
morgan@mlandon.com

Project Title:

Chippewa County
City / County Building Renovation
325 Court Street
Sault Saint Marie, Michigan 49783

Landmark Design Group, P.C.
3900 Linden Ave. S.E. Suite C, Grand Rapids, MI 49548-3406
v: (616) 956-0606

date:	issued for:
04-09-2012	Bids and Permits

Seal:

Project Number:

Landmark Project Number: 10-007

© 2012 Landmark Design Group P.C.

SS101

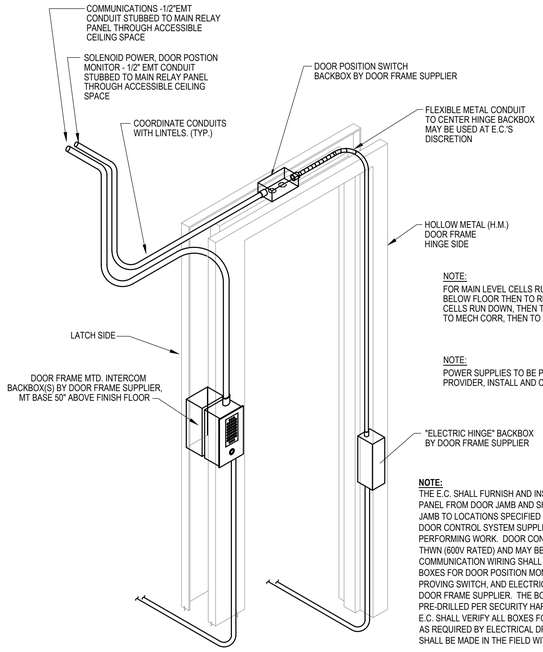

NOTE:
FOR MAIN LEVEL CELLS RUN CONDUIT DOWN, BELOW FLOOR THEN TO RELAY PANEL. FOR MEZZANINE CELLS RUN DOWN, THEN THROUGH CORE OF FLOOR PLANK TO MECH CORR, THEN TO RELAY PANEL.

NOTE:
POWER SUPPLIES TO BE PROVIDED BY THE ESCS PROVIDER, INSTALL AND CONNECT BY EC.

NOTE:
THE E.C. SHALL FURNISH AND INSTALL ALL CONDUIT TO MAIN RELAY PANEL FROM DOOR JAMB AND SHALL PROVIDE CONDUITS WITHIN JAMB TO LOCATIONS SPECIFIED BY SECURITY DOOR HARDWARE AND DOOR CONTROL SYSTEM SUPPLIERS. COORDINATE PRIOR TO PERFORMING WORK. DOOR CONTROL / SIGNAL WIRE SHALL BE #18 THWN (600V RATED) AND MAY BE INSTALLED IN SAME RACEWAY. COMMUNICATION WIRING SHALL BE IN SEPARATE RACEWAY. BACK BOXES FOR DOOR POSITION MONITOR, DEAD LATCH, DEAD LATCH PROVING SWITCH, AND ELECTRIC HINGE SHALL BE INSTALLED BY THE DOOR FRAME SUPPLIER. THE BOXES SHALL BE SIZED, LOCATED, AND PRE-DRILLED PER SECURITY HARDWARE SUPPLIERS SPECIFICATIONS. E.C. SHALL VERIFY ALL BOXES FOR DEVICES ARE SUPPLIED IN FRAMES AS REQUIRED BY ELECTRICAL DRAWINGS. NO DEVICE CHANGES SHALL BE MADE IN THE FIELD WITHOUT WRITTEN AUTHORIZATION .

DOOR HARDWARE IS SPECIFIED AS LOW VOLTAGE, SECURITY SYSTEM PROVIDER SHALL PROVIDE AND INSTALL ALL NECESSARY POWER SUPPLIES TO CONVERT LINE VOLTAGE TO LOW VOLTAGE REQUIRED. CONFIRM NECESSARY VOLTAGE REQUIREMENTS BEFORE EQUIPMENT IS ORDERED.

1
E102

LOW VOLTAGE SECURITY HOLLOW METAL DOOR FRAMES & DEVICES

NO SCALE

GENERAL NOTES

1. REFER TO SPECIFICATIONS FOR MATERIALS AND EQUIPMENT REQUIREMENTS.
2. COORDINATE WORK WITH ALL OTHER TRADES BEFORE INSTALLATION TO ELIMINATE CONFLICTS.
3. SPECIFICATIONS REQUIRE A COMPLETE, NEW FIRE ALARM SYSTEM TO COMPLY WITH CURRENT CODES. DEVICES SHOWN ON THIS PLAN ARE FOR REFERENCE ONLY.
4. AT THE COURTROOM, IT IS INTENDED THAT THE CONTRACTOR PROVIDE WIREWAY AND BOXES TO BE USED FOR THE OWNER'S AUDIO AND RECORDING SYSTEM. THE SYSTEM ITSELF IS NOT A PART OF THE WORK OF THIS PROJECT.

◯ KEYED NOTES

1. WHEN THE DURESS SWITCH IS ACTIVATED AN ALARM IS GENERATED IDENTIFYING THE SPECIFIC LOCATION. IN ADDITION TO PROVIDING AN AUDIBLE SIGNAL AT THE CENTRAL CONTROL POINT FOR THIS SYSTEM, A PREVIOUSLY RECORDED MESSAGE SHALL BE SENT TO THE COUNTY 911 DISPATCH CENTER VIA AUTOMATIC DIAL-UP.
2. CAMERAS SHALL BE ADJUSTED SO THAT NO VIEW OF THE JURY AREA IS TAKEN.
3. JURY ANNUNCIATION SYSTEM TO PROVIDE LIGHTED SIGNAL FROM JURY ROOM ACTIVATION.
4. SWITCH TO ACTIVATE LIGHTS OUTSIDE OF ROOM, PROVIDE LABEL TO INDICATE USE, WORDING TO BE COORDINATED WITH OWNER.
5. DURESS SWITCH FINAL LOCATION TO BE COORDINATED WITH OWNER BEFORE INSTALLATION.
6. THESE ITEMS ARE TO BE AN EXPANSION OF THE EXISTING JAIL SECURITY CONTROL SYSTEM.
7. VIDEO ARRAIGNMENT SYSTEM TO BE PROVIDED AS PART OF THIS CONTRACT. VISILINK, OR EQUAL, "OUT OF THE BOX" SOLUTION WITH: V1 SLOPED TOP SECURE ENCLOSURE LOCATED IN THE EXISTING JAIL AS SHOWN. MONITOR FOR COURT SIDE TO BE LOCATED AT THE JUDGE'S BENCH. PROVIDE 120V / 1Ø POWER AT EACH END. PROVIDE CAT 6e CABLE BETWEEN. IN JAIL RUN THIS CABLE IN CONDUIT WHERE IT CANNOT BE CONCEALED ABOVE CEILINGS. CONFIRM DESIRED EQUIPMENT LOCATIONS WITH OWNER BEFORE ROUGH-IN BEGINS.

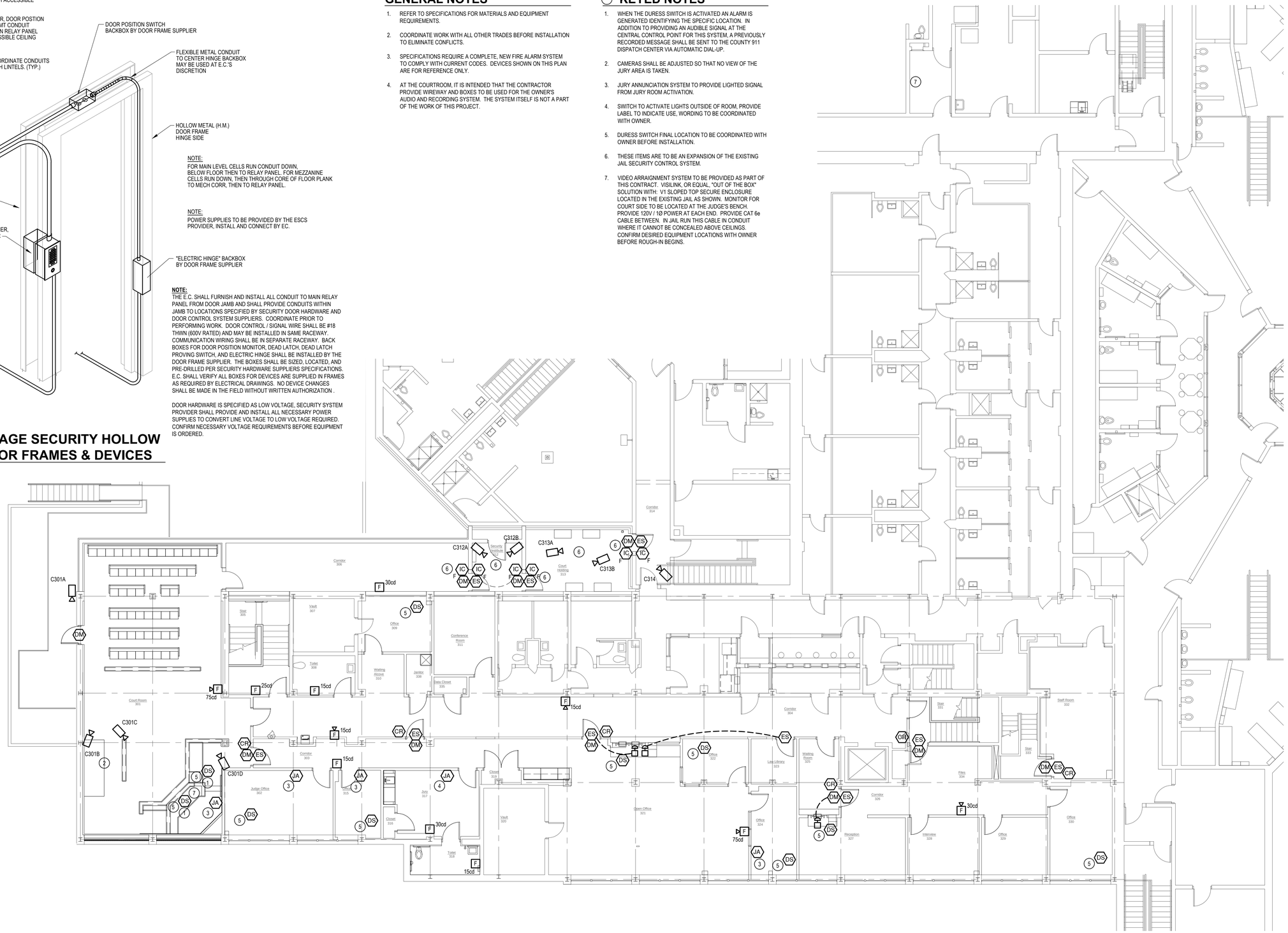

CALLED NORTH

SPECIAL SYSTEMS SECOND FLOOR PLAN

1/8" = 1' - 0"

Consultant:
MORGAN M. LANDON, PE, LLC
2054 Brandon Drive NW
Grand Rapids, Michigan 49504
616-608-3372 fax 616-608-3372
morgan@mlandon.com

Project Title:
Chippewa County
City / County Building Renovation
325 Court Street
Sault Saint Marie, Michigan 49783

Landmark Design Group, P.C.
3900 Linden Ave. S.E. Suite C, Grand Rapids, MI 49548-3406
v: (616) 956-0606

issued for:	date:
Bids and Permits	04-09-2012

Seal:

Project Number:

Landmark Project Number:
10-007

© 2012 Landmark Design Group P.C.

SS102

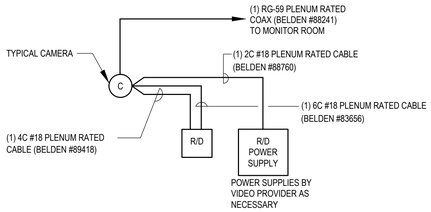

6 SS150 **TYPICAL CCTV CAMERA WIRING DIAGRAM**
NO SCALE

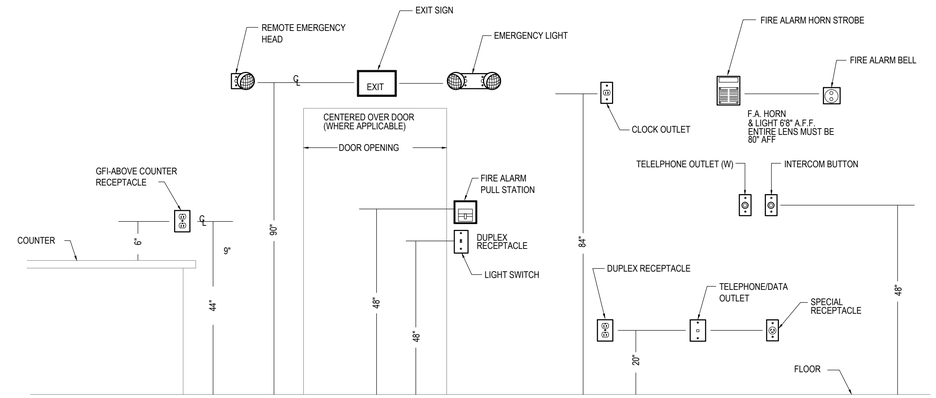

NOTE:
OBTAIN ARCHITECT'S APPROVAL OF ALL LOCATIONS BEFORE ROUGH-IN.

4 SS150 **TYPICAL MOUNTING HEIGHTS**
NO SCALE

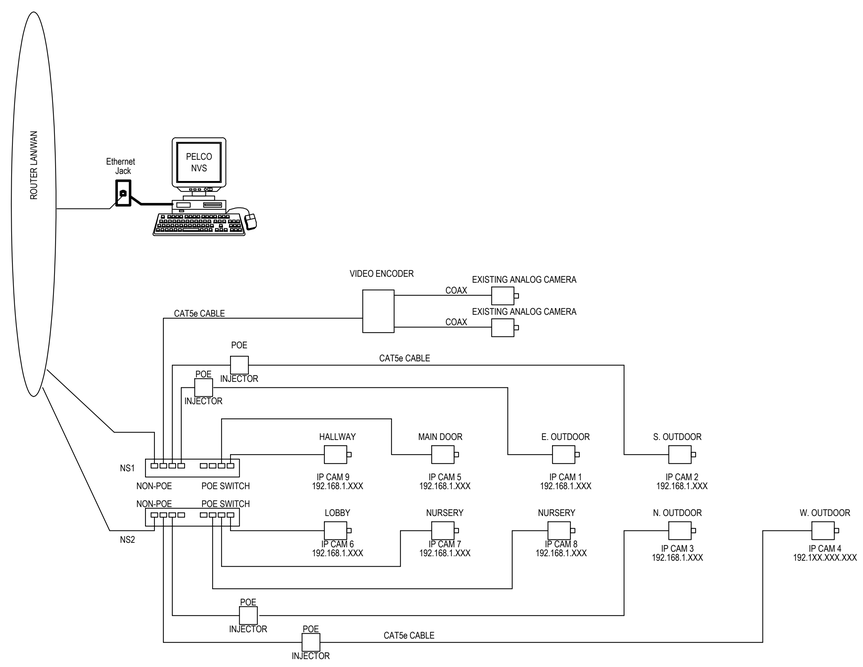

5 SS150 **TYPICAL CCTV WIRING DIAGRAM AND LAYOUT**
NO SCALE

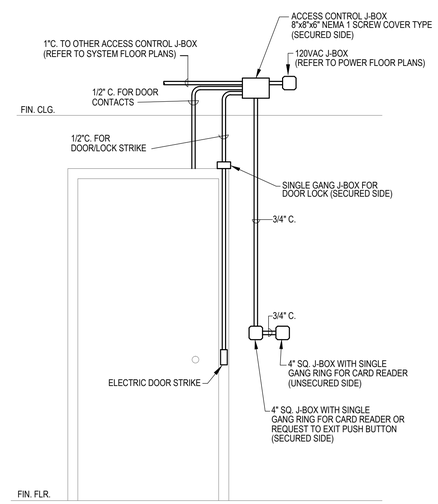

3 SS150 **ACCESS CONTROL CONDUIT FOR CARD READER SYSTEM**
NO SCALE

2 SS150 **NOT USED**
NO SCALE

1 SS150 **NOT USED**
NO SCALE

MORGAN M. LANDON, PE, LLC
2054 Brandon Drive NW
Grand Rapids, Michigan 49504
616-608-3372 fax 616-608-3372
morgan@mlandon.com

Consultant:

Chippewa County
City / County Building Renovation
325 Court Street
Sault Saint Marie, Michigan 49783

Project Title:

Landmark Design Group, P.C.
3900 Linden Ave. S.E. Suite C, Grand Rapids, MI 49548-3406
v: (616) 956-0606

date:	issued for:
04-09-2012	Bids and Permits

Seal:

Project Number:

Landmark Project Number:
10-007

© 2012 Landmark Design Group P.C.

SS150